Inventflow: Grundfos A-partner

Grundfos TP 65-410/2 A-F-A-BQQE-MX1

Find the pump here:
https://inventflow.nl/en/pompenfilter/tp/grundfos-tp-65-410-2-a-f-a-bqqe-mx1

Contact

info@inventflow.nl
+31 (0) 546 45 80 72

Datasheet

Qty.	Description
1	**TP 65-410/2 A-F-A-BQQE-MX1**

Note! Product picture may differ from actual product

Product No.: 96087525

Single-stage centrifugal volute in-line single-head pump:
- wear rings made of bronze
- cataphoresis treatment
- stable sleeve coupling
- top-pull-out principle for easy maintenance
- optimized hydraulics
- in-line design with opposite suction and discharge ports enabling mounting in pipework or on a concrete foundation
- corrosion resistant maintenance-free mechanical shaft seal.

Phase:	The motor is a 3-phase AC motor.
Controls:	
Frequency converter:	NONE
Liquid:	
Pumped liquid:	Water
Liquid temperature range:	-25 .. 120 °C
Selected liquid temperature:	20 °C
Density:	998.2 kg/m³
Technical:	
Pump speed on which pump data are based:	2910 rpm
Rated flow:	56.3 m³/h
Rated head:	33.6 m
Actual impeller diameter:	172 mm
Code for shaft seal:	BQQE
Curve tolerance:	ISO9906:2012 3B2
Materials:	
Pump housing:	Cast iron EN-GJL-250 ASTM class 35
Impeller:	Cast iron EN-GJL-200 ASTM class 30
Installation:	
Range of ambient temperature:	-30 .. 60 °C

Qty.	Description	
	Maximum operating pressure:	16 bar
	Max pressure at stated temp:	16 bar / 120 °C
	Type of connection:	DIN
	Size of connection:	DN 65
	Pressure rating for connection:	PN 16
	Port-to-port length:	360 mm
	Flange size for motor:	FF265
	Electrical data:	
	Motor type:	132SB
	IE Efficiency class:	IE3
	Rated power - P2:	7.5 kW
	Mains frequency:	50 Hz
	Rated voltage:	3 x 380-415D/660-690Y V
	Rated current:	14,4-14,0/8,30-8,10 A
	Starting current:	780-910 %
	Cos phi - power factor:	0.88-0.86
	Rated speed:	2910-2920 rpm
	Efficiency:	IE3 90,1% - IE3 90,4%
	Motor efficiency at full load:	90.1-90.4 %
	Motor efficiency at 3/4 load:	90.8 %
	Motor efficiency at 1/2 load:	90.8 %
	Number of poles:	2
	Enclosure class (IEC 34-5):	55 Dust/Jetting
	Insulation class (IEC 85):	F
	Motor No:	87370232
	Others:	
	Minimum efficiency index, MEI ≥:	0.70
	Net weight:	98.3 kg
	Gross weight:	110 kg
	Shipping volume:	0.22 m³
	Danish VVS No.:	381704410
	Finnish LVI No.:	4616081
	Country of origin:	HU
	Custom tariff no.:	84137051

96087525 TP 65-410/2 A-F-A-BQQE-MX1 50 Hz

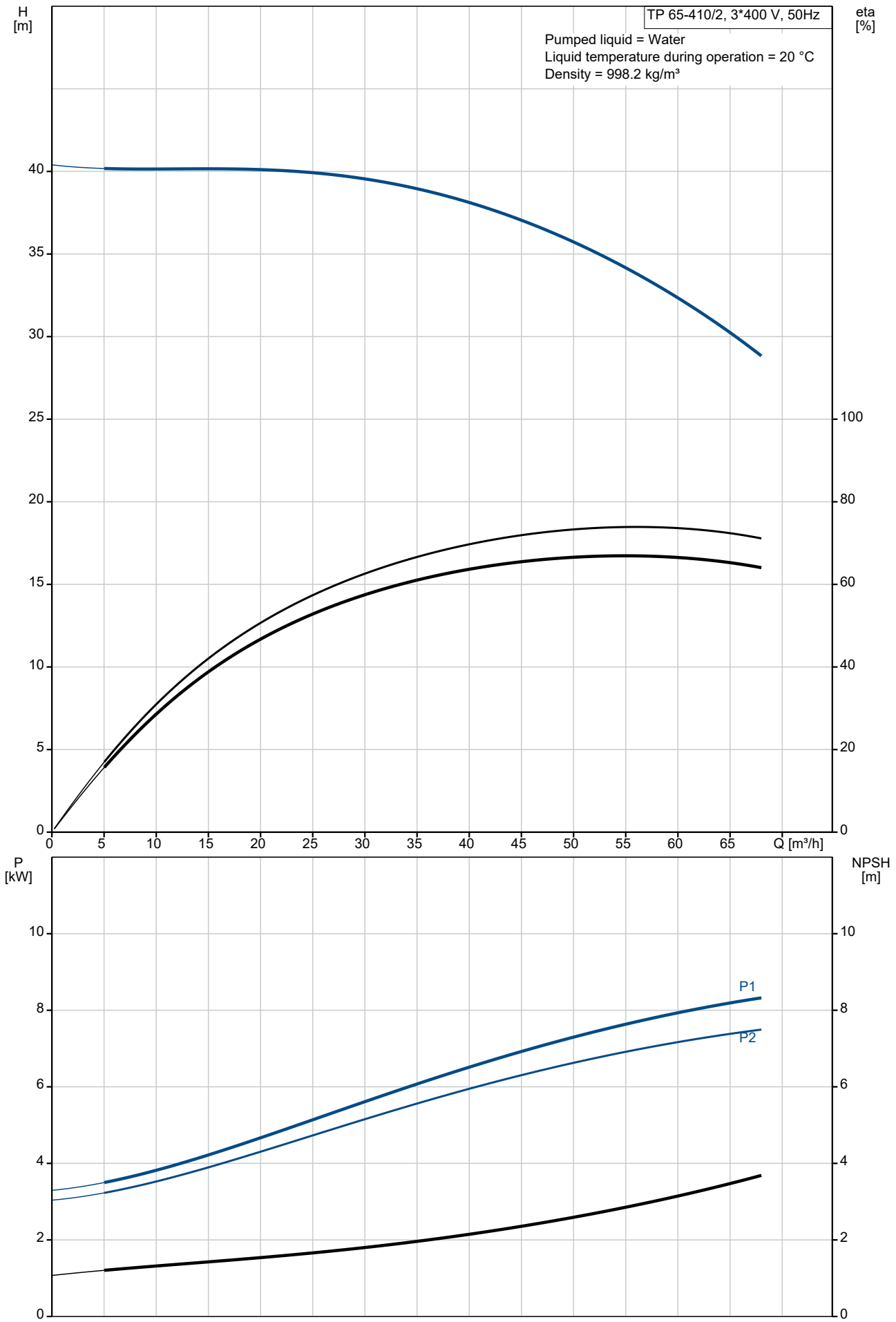

Description	Value
General information:	
Product name:	TP 65-410/2 A-F-A-BQQE-MX1
Product No:	96087525
EAN number:	5700395314908
Technical:	
Pump speed on which pump data are based:	2910 rpm
Rated flow:	56.3 m³/h
Rated head:	33.6 m
Maximum head:	410 dm
Actual impeller diameter:	172 mm
Code for shaft seal:	BQQE
Curve tolerance:	ISO9906:2012 3B2
Pump version:	A
Materials:	
Pump housing:	Cast iron
Pump housing:	EN-GJL-250
Pump housing:	ASTM class 35
Impeller:	Cast iron
Impeller:	EN-GJL-200
Impeller:	ASTM class 30
Material code:	A
Installation:	
Range of ambient temperature:	-30 .. 60 °C
Maximum operating pressure:	16 bar
Max pressure at stated temp:	16 bar / 120 °C
Type of connection:	DIN
Size of connection:	DN 65
Pressure rating for connection:	PN 16
Port-to-port length:	360 mm
Flange size for motor:	FF265
Connect code:	F
Liquid:	
Pumped liquid:	Water
Liquid temperature range:	-25 .. 120 °C
Selected liquid temperature:	20 °C
Density:	998.2 kg/m³
Electrical data:	
Motor type:	132SB
IE Efficiency class:	IE3
Rated power - P2:	7.5 kW
Mains frequency:	50 Hz
Rated voltage:	3 x 380-415D/660-690Y V
Rated current:	14,4-14,0/8,30-8,10 A
Starting current:	780-910 %
Cos phi - power factor:	0.88-0.86
Rated speed:	2910-2920 rpm
Efficiency:	IE3 90,1% - IE3 90,4%
Motor efficiency at full load:	90.1-90.4 %
Motor efficiency at 3/4 load:	90.8 %
Motor efficiency at 1/2 load:	90.8 %
Number of poles:	2
Enclosure class (IEC 34-5):	55 Dust/Jetting
Insulation class (IEC 85):	F
Motor protec:	PTC
Motor No:	87370232
Controls:	
Frequency converter:	NONE
Others:	
Minimum efficiency index, MEI ≥:	0.70
Net weight:	98.3 kg
Gross weight:	110 kg
Shipping volume:	0.22 m³

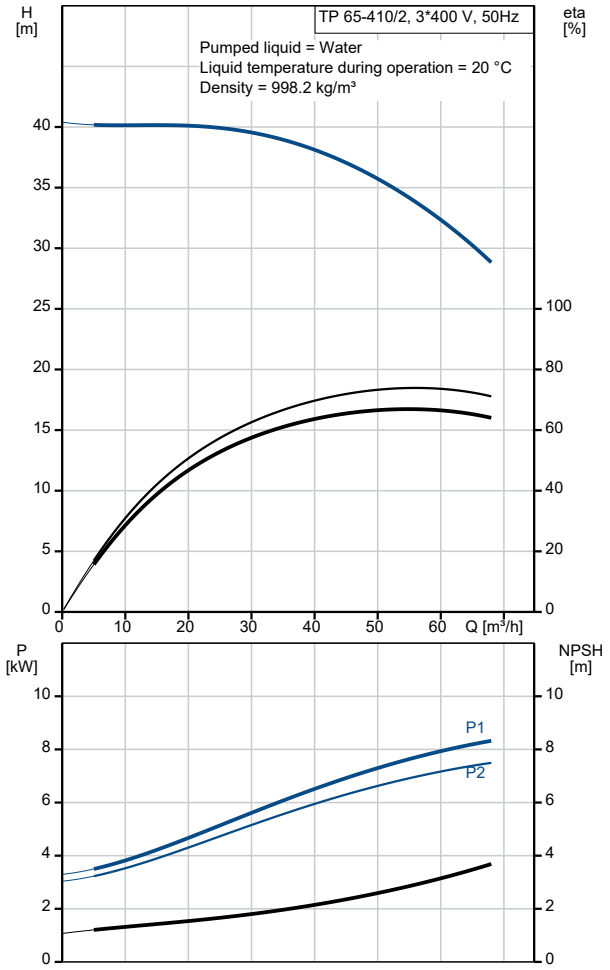

Description	Value
Danish VVS No.:	381704410
Finnish LVI No.:	4616081
Country of origin:	HU
Custom tariff no.:	84137051

96087525 TP 65-410/2 A-F-A-BQQE-MX1 50 Hz

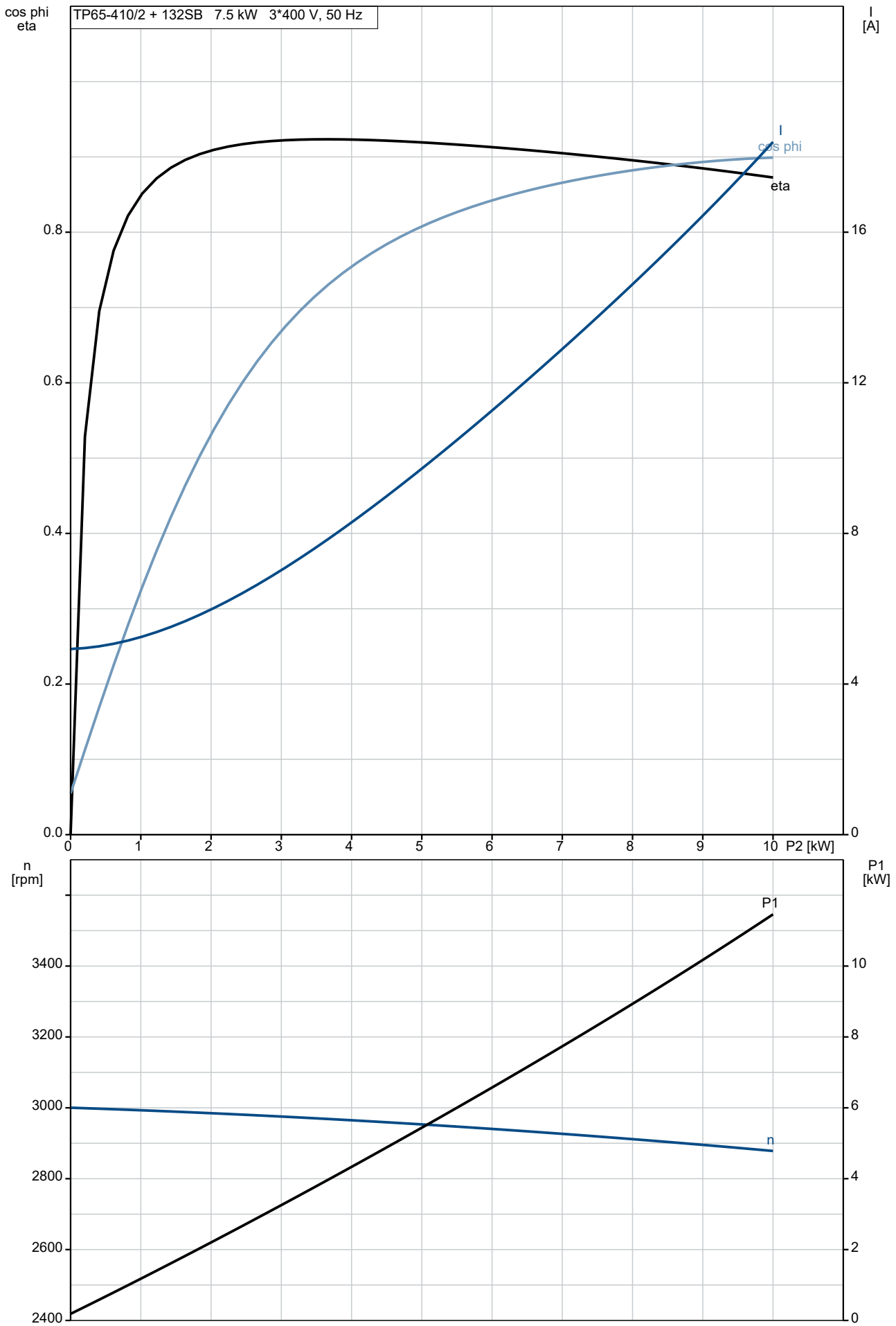

96087525 TP 65-410/2 A-F-A-BQQE-MX1 50 Hz

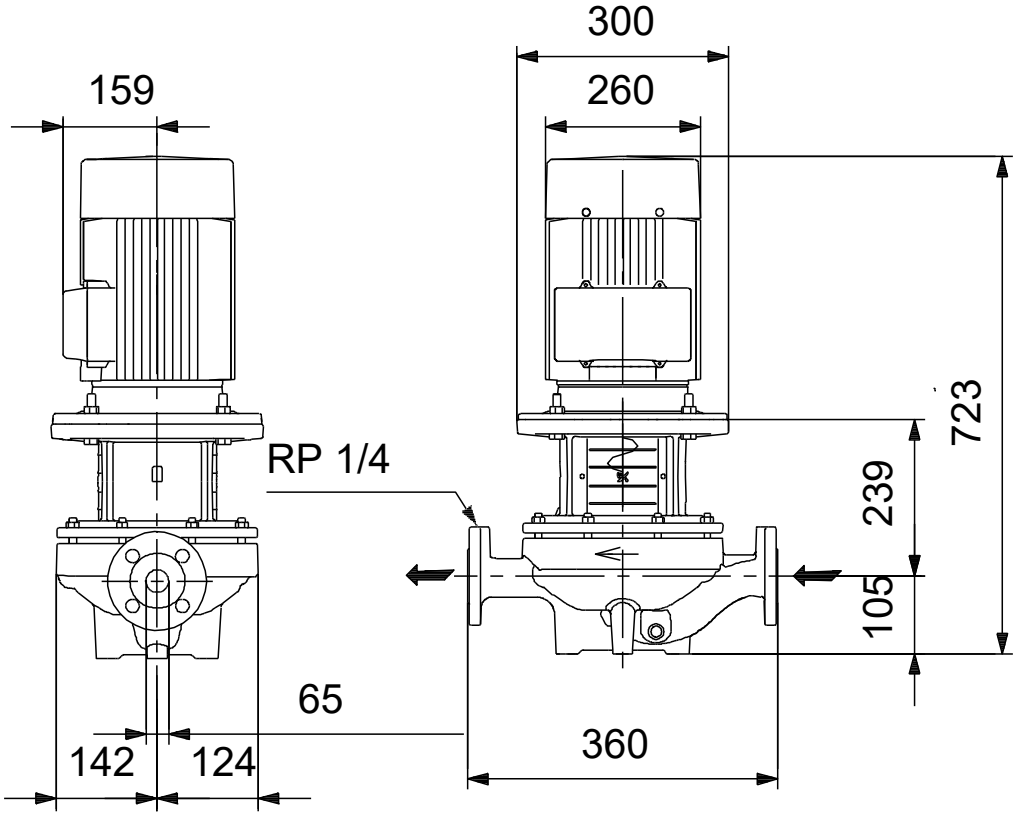

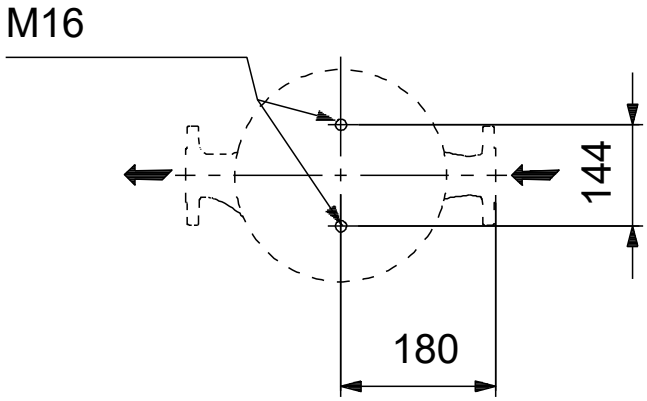

Note! All units are in [mm] unless others are stated.
Disclaimer: This simplified dimensional drawing does not show all details.

Spare parts TP 65-410/2, Product No. 96087525
Produced After 1101 (production year and week number)

Pos	Omschrijving	Opmerking tekst	Classificatie Gegevens	Onderdeelnr.	Aantal	Eenheid
-	Motor				1	pcs
-	Kit, bearing cpl.			96796600	1	
54	Ball bearing					1
111	Ball bearing		Designation: 6206.2Z.C3.SYN			1
157	O-ring		Diameter: 62			1
			Material type: NBR			
			Thickness: 3			
158	Waved washer					1
159.b	V-ring					1
159	V-ring					1
-	Kit, eyebolt			96279874	1	
189	Lifting eye					1
-	Kit, fan			96796189	1	
156	Fan					1
-	Kit, fan cover			96796188	1	
151	Fan cover					1
152	Pan head thread forming screw					4
-	Kit, flange			96796224	1	
156.b	Flange					1
159.b	V-ring					1
185c	Nut					4
185	Hex socket head cap screw					4
186	Drain plug					4
-	Kit, gaskets			96798510	1	
184	O-ring					2
-	Kit, key			96279823	1	
40	Parallel key					1
-	Kit, ND-end shield cpl.			96796598	1	
156.a	End shield NDE					1
157	O-ring		Diameter: 62			1
			Material type: NBR			
			Thickness: 3			
158	Waved washer					1
159	V-ring					1
185.c	Nut					4
185.a	Hex socket head cap screw					4
-	Kit, shaft seal			96843458	1	
159.b	V-ring					1
159	V-ring					1
-	Kit, terminal board			96030209	1	
	Bracket cpl.					1
163	Hex socket head screw					1
176	Terminal					1
176	Terminal board					1
178	Connecting piece					3
179	Cable shoe					6
180a	Slot cheese head screw		Designation: COMBI TORX T25			6
			Length (mm): 10			
			Thread: M5			
180	Wire clamp					6
-	Kit, terminal box cover			96796215	1	
164	Terminal box cover w/gasket					1

Pos	Omschrijving	Opmerking tekst	Classificatie Gegevens	Onderdeelnr.	Aantal	Eenheid
166	Pan head thread forming screw					4
1a	Motor stool			98996940	1	pcs
19	Plug			98163028	2	pcs
49	Impeller		Outer diameter: 172	98296615	1	pcs
- 50	Pump housing cpl.			98925095	1	pcs
36	Nut		Thread: M10	96620484	6	
67	Nut		Thread: M14	92526531	1	pcs
72a	O-ring			92547662	1	pcs
72a	O-ring			92526508	1	pcs
72a	O-ring			97511824	1	pcs
72a	O-ring			99756265	1	pcs
77a	Pan head screw			99266550	4	pcs
105	Shaft seal			99380916	1	pcs
105	Shaft seal			99884645	1	pcs