Inventflow: Grundfos A-partner

Grundfos TP 80-140/2 A-F-A-BQQE-IX1

Find the pump here:
https://inventflow.nl/en/pompenfilter/tp/grundfos-tp-80-140-2-a-f-a-bqqe-ix1

Contact

info@inventflow.nl
+31 (0) 546 45 80 72

Datasheet

Qty.	Description
1	**TP 80-140/2 A-F-A-BQQE-IX1**

Note! Product picture may differ from actual product

Product No.: 96108717

Single-stage centrifugal volute in-line single-head pump:
- wear rings made of bronze
- cataphoresis treatment
- stable sleeve coupling
- top-pull-out principle for easy maintenance
- optimized hydraulics
- in-line design with opposite suction and discharge ports enabling mounting in pipework or on a concrete foundation
- corrosion resistant maintenance-free mechanical shaft seal.

Phase:	The motor is a 3-phase AC motor.
Controls:	
Frequency converter:	NONE
Liquid:	
Pumped liquid:	Water
Liquid temperature range:	-25 .. 120 °C
Selected liquid temperature:	20 °C
Density:	998.2 kg/m³
Technical:	
Pump speed on which pump data are based:	2900 rpm
Rated flow:	52.2 m³/h
Rated head:	10.4 m
Actual impeller diameter:	105 mm
Code for shaft seal:	BQQE
Curve tolerance:	ISO9906:2012 3B2
Materials:	
Pump housing:	Cast iron EN-GJL-250 ASTM class 35
Impeller:	Cast iron EN-GJL-200 ASTM class 30
Installation:	
Range of ambient temperature:	-30 .. 60 °C

Qty.	Description	
	Maximum operating pressure:	16 bar
	Max pressure at stated temp:	16 bar / 120 °C
	Type of connection:	DIN
	Size of connection:	DN 80
	Pressure rating for connection:	PN 16
	Port-to-port length:	360 mm
	Flange size for motor:	FF165
	Electrical data:	
	Motor type:	90LE
	IE Efficiency class:	IE3
	Rated power - P2:	2.2 kW
	Mains frequency:	50 Hz
	Rated voltage:	3 x 380-415D V
	Rated current:	4.65 A
	Starting current:	840-920 %
	Rated speed:	2890-2910 rpm
	Efficiency:	IE3 85,9%
	Motor efficiency at full load:	85.9 %
	Motor efficiency at 3/4 load:	88.2 %
	Motor efficiency at 1/2 load:	88.0 %
	Number of poles:	2
	Enclosure class (IEC 34-5):	55 Dust/Jetting
	Insulation class (IEC 85):	F
	Motor No:	99605763
	Others:	
	Minimum efficiency index, MEI ≥:	0.69
	Net weight:	59.1 kg
	Gross weight:	71 kg
	Shipping volume:	0.22 m³
	Finnish LVI No.:	4616096
	Country of origin:	HU
	Custom tariff no.:	84137051

96108717 TP 80-140/2 A-F-A-BQQE-IX1 50 Hz

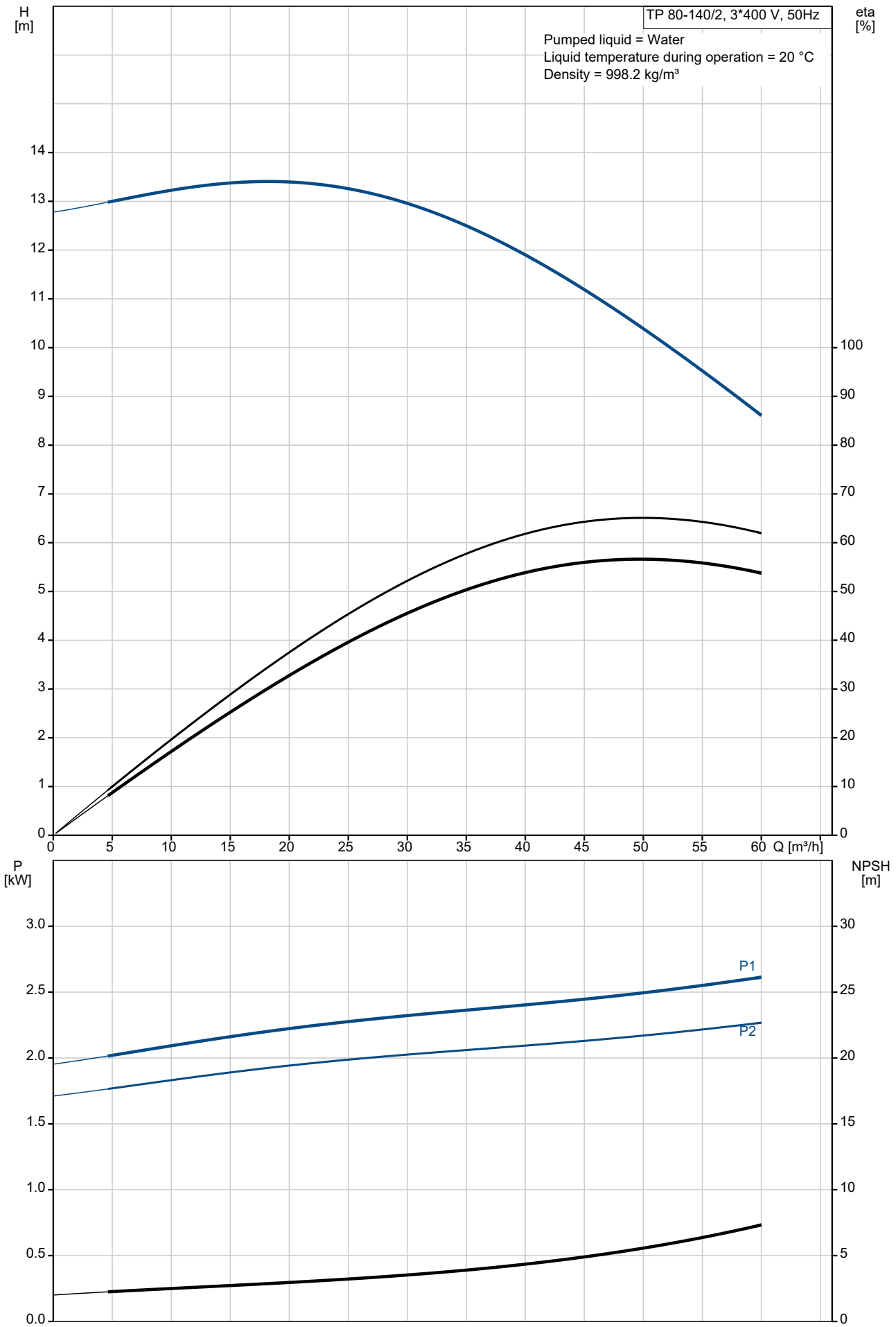

Description	Value
General information:	
Product name:	TP 80-140/2 A-F-A-BQQE-IX1
Product No:	96108717
EAN number:	5700396976839
Technical:	
Pump speed on which pump data are based:	2900 rpm
Rated flow:	52.2 m³/h
Rated head:	10.4 m
Maximum head:	140 dm
Actual impeller diameter:	105 mm
Code for shaft seal:	BQQE
Curve tolerance:	ISO9906:2012 3B2
Pump version:	A
Materials:	
Pump housing:	Cast iron
Pump housing:	EN-GJL-250
Pump housing:	ASTM class 35
Impeller:	Cast iron
Impeller:	EN-GJL-200
Impeller:	ASTM class 30
Material code:	A
Installation:	
Range of ambient temperature:	-30 .. 60 °C
Maximum operating pressure:	16 bar
Max pressure at stated temp:	16 bar / 120 °C
Type of connection:	DIN
Size of connection:	DN 80
Pressure rating for connection:	PN 16
Port-to-port length:	360 mm
Flange size for motor:	FF165
Connect code:	F
Liquid:	
Pumped liquid:	Water
Liquid temperature range:	-25 .. 120 °C
Selected liquid temperature:	20 °C
Density:	998.2 kg/m³
Electrical data:	
Motor type:	90LE
IE Efficiency class:	IE3
Rated power - P2:	2.2 kW
Mains frequency:	50 Hz
Rated voltage:	3 x 380-415D V
Rated current:	4.65 A
Starting current:	840-920 %
Rated speed:	2890-2910 rpm
Efficiency:	IE3 85,9%
Motor efficiency at full load:	85.9 %
Motor efficiency at 3/4 load:	88.2 %
Motor efficiency at 1/2 load:	88.0 %
Number of poles:	2
Enclosure class (IEC 34-5):	55 Dust/Jetting
Insulation class (IEC 85):	F
Motor protec:	NONE
Motor No:	99605763
Controls:	
Frequency converter:	NONE
Others:	
Minimum efficiency index, MEI ≥:	0.69
Net weight:	59.1 kg
Gross weight:	71 kg
Shipping volume:	0.22 m³
Finnish LVI No.:	4616096

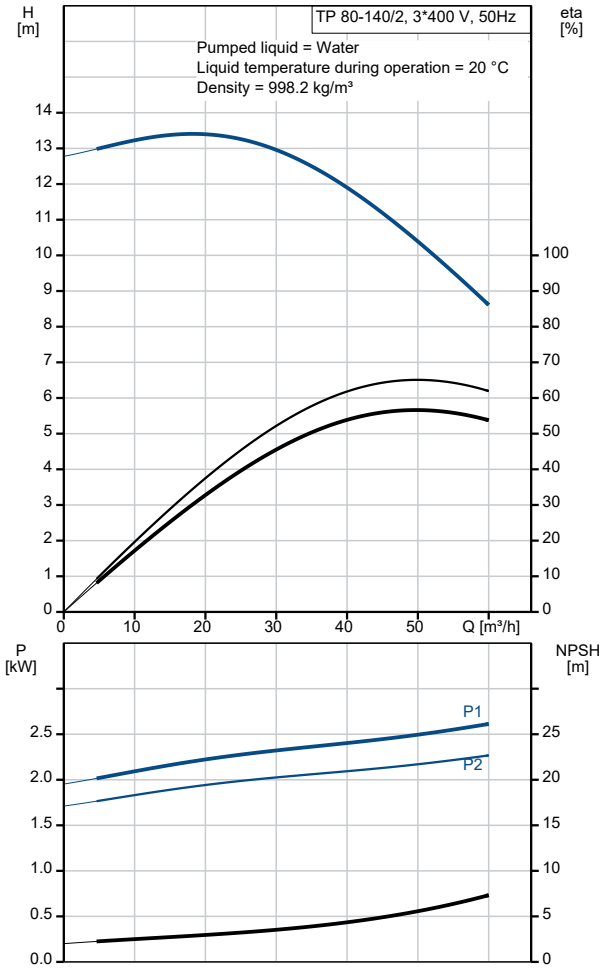

Description	Value
Country of origin:	HU
Custom tariff no.:	84137051

96108717 TP 80-140/2 A-F-A-BQQE-IX1 50 Hz

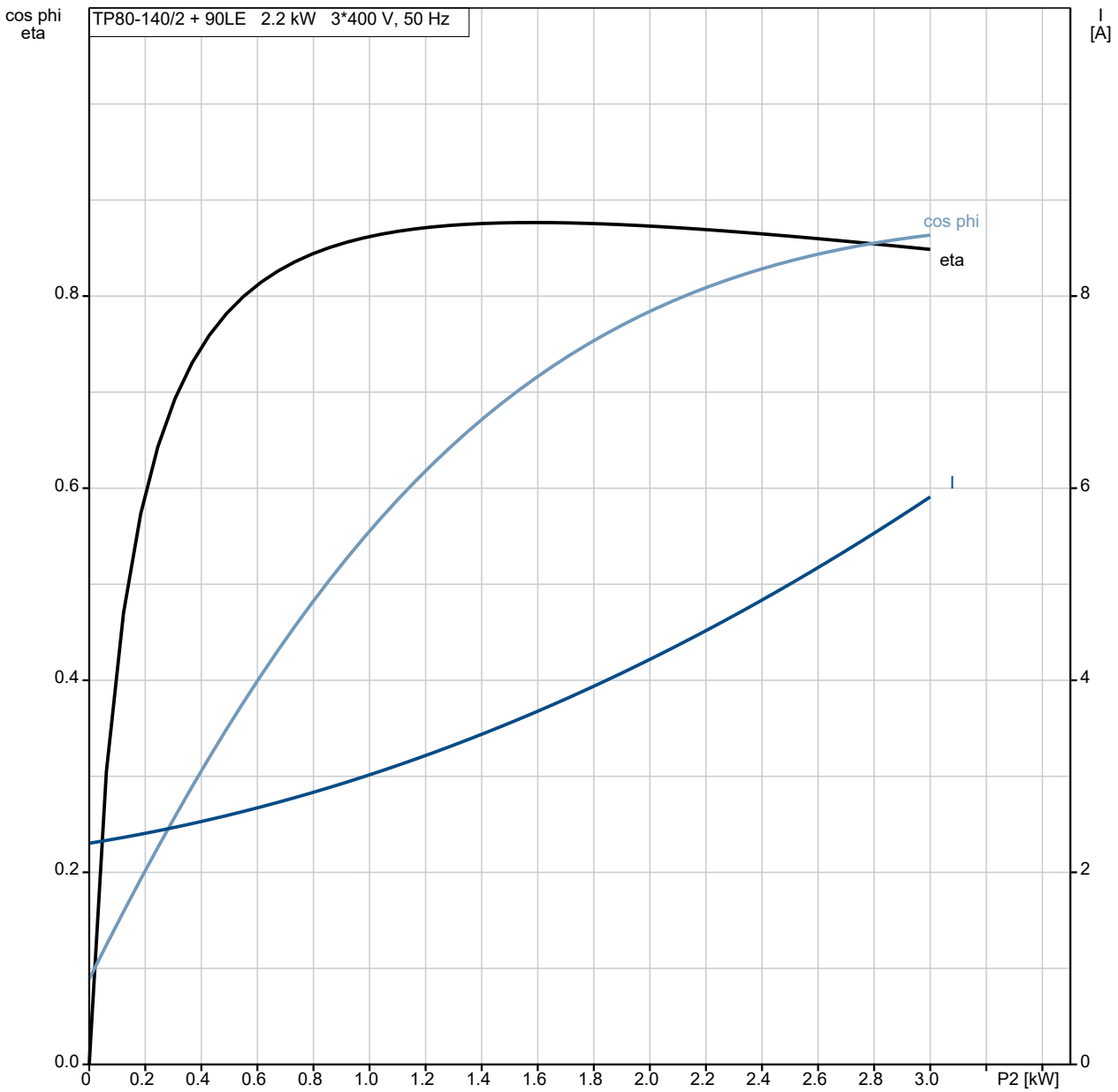

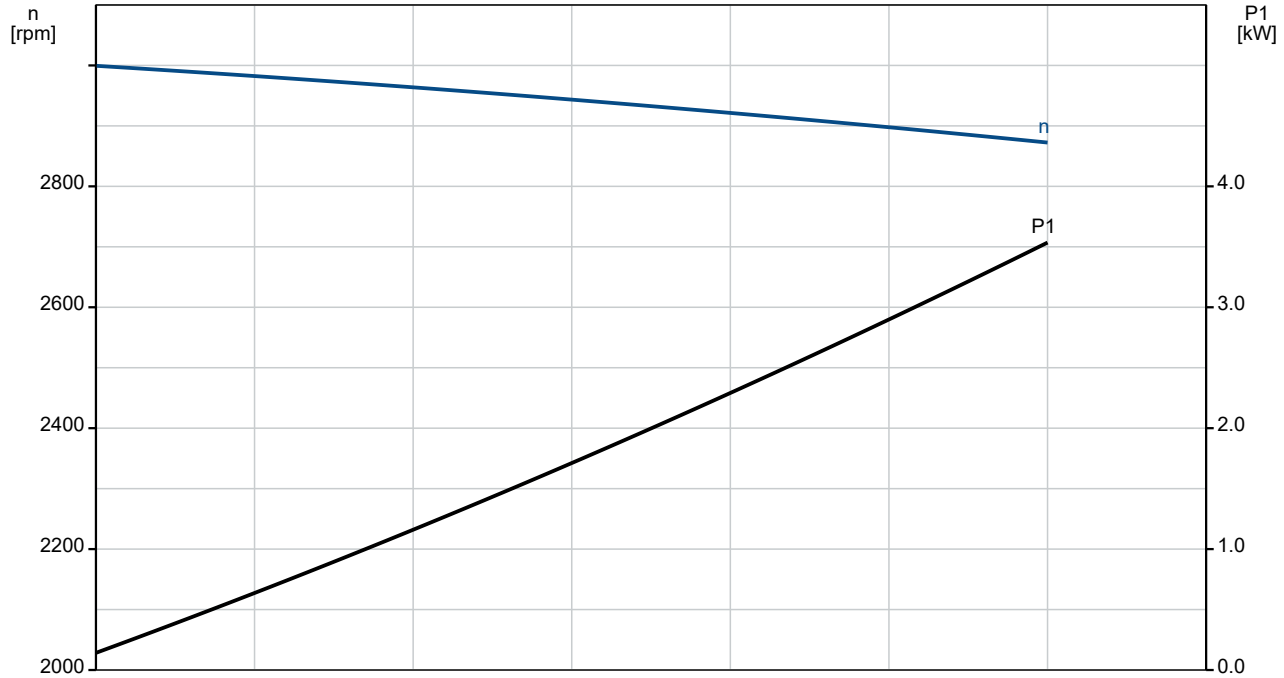

96108717 TP 80-140/2 A-F-A-BQQE-IX1 50 Hz

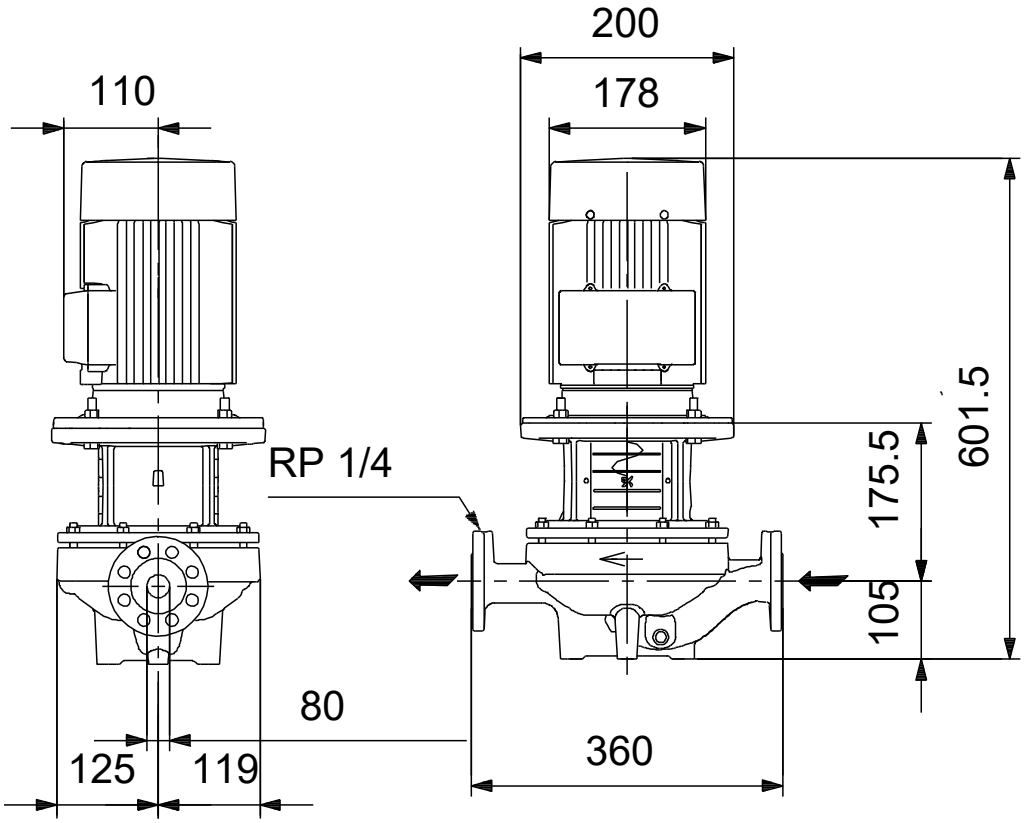

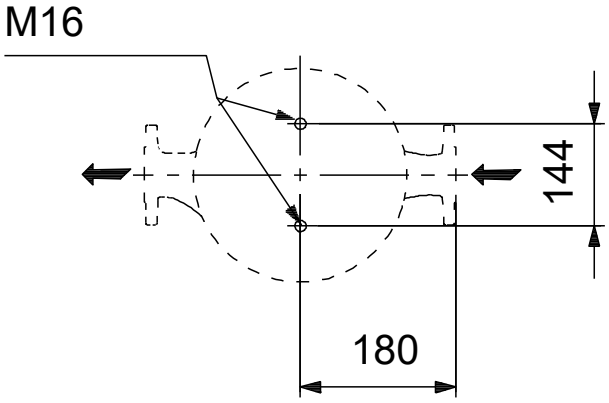

Note! All units are in [mm] unless others are stated.
Disclaimer: This simplified dimensional drawing does not show all details.

Spare parts TP 80-140/2, Product No. 96108717
Produced After 1945 (production year and week number)

Pos	Omschrijving	Opmerking tekst	Classificatie Gegevens	Onderdeelnr.	Aantal	Eenheid
-	Motor			99606511	1	pcs
-	Kit, bearing cpl.			96279794	1	
111	Ball bearing					1
154	Ball bearing					1
157	O-ring		Diameter: 52			1
			Material type: NBR			
			Thickness: 3			
158	Waved washer					1
187	Retaining ring					1
188	Retaining ring					1
-	Kit, end shield			96279789	1	
156a	End shield					1
157a	Gasket		Internal diameter: 141,2			1
			Outer diameter: 145,5			
			Thickness: 0,2			
157	O-ring		Diameter: 52			1
			Material type: NBR			
			Thickness: 3			
158	Waved washer					1
159a	Seal ring					1
-	Kit, fan			96279757	1	
156	Fan					1
159a	Seal ring					1
-	Kit, fan cover			96279755	1	
151	Fan cover					1
152	Pan head thread forming screw					4
-	Kit, flange			96279781	1	
156b	Flange					1
159.c	Seal ring					1
184	Gasket		Internal diameter: 141,2			1
			Outer diameter: 145,5			
			Thickness: 0,2			
186	Drain plug					3
-	Kit, key			96279818	1	
171	Parallel key		Dimension: 8X7X40			1
-	Kit, retaining ring			96279798	1	
187	Retaining ring					1
188	Retaining ring					1
-	Kit, shaft seal			96279761	1	
159c	Seal ring					1
159a	Seal ring					1
-	Kit, staybolts			96279792	1	
181	Pan head staybolt					4
-	Kit, terminal board			96279769	1	
	Bracket cpl.					1
163	Hex socket head screw					1
173a	Base					1
173	Pan head thread forming screw		Designation: COMBI TORX T25			1
176	Slot cheese head screw		Designation: COMBI TORX T25			6
			Length (mm): 10			

Pos	Omschrijving	Opmerking tekst	Classificatie Gegevens	Onderdeelnr.	Aantal	Eenheid
			Thread: M5			
176	Terminal				1	
176	Connecting piece				3	
176	Wire clamp				3	
176	Terminal board				1	
177	Pan head screw				1	
-	Kit, terminal box			96279771	1	
164	Terminal box cover w/gasket				1	
166	Pan head thread forming screw				4	
	Stub shaft			99113730	1	pcs
1a	Motor stool			98987927	1	pcs
19	Plug			98163028	2	pcs
49	Impeller			98296673	1	pcs
- 50	Pump housing cpl.			99094937	1	pcs
19	Pipe plug		Thread: R 3/8	96620487	2	
36	Nut		Thread: M10	96620484	6	
67	Nut		Thread: M14	92526531	1	pcs
72a	O-ring			92547662	1	pcs
72a	O-ring			92526508	1	pcs
72a	O-ring			97511824	1	pcs
72a	O-ring			99756265	1	pcs
77a	Pan head screw			99266550	4	pcs
105	Shaft seal			99380916	1	pcs
105	Shaft seal			99884645	1	pcs