Inventflow: Grundfos A-partner

Grundfos CRN 32-4 A-F-A-E-HQQE

Find the pump here:
https://inventflow.nl/en/pompenfilter/crn/grundfos-crn-32-4-a-f-a-e-hqqe

Contact

info@inventflow.nl
+31 (0) 546 45 80 72

Datasheet

Qty.	Description
1	**CRN 32-4 A-F-A-E-HQQE**

Product No.: 96122357
Vertical, non-self-priming, multistage, in-line, centrifugal pump for installation in pipe systems and mounting on a foundation.

The pump has the following characteristics:
- Impellers, intermediate chambers and outer sleeve are made of

Impeller: Stainless steel, EN 1.4401.
- Pump head cover and base are made of

Pump housing: Stainless steel, EN 1.4408.
- The shaft seal has assembly length according to EN 12756.
- Power transmission is via cast iron split coupling.

Flange standard: - Pipework connection is via DIN flanges/couplings.

Phase: The motor is a 3-phase AC motor.

Controls:
Frequency converter: NONE

Liquid:
Pumped liquid: Water
Liquid temperature range: -40 .. 120 °C
Selected liquid temperature: 20 °C
Density: 998.2 kg/m³

Technical:
Pump speed on which pump data are based: 2919 rpm
Rated flow: 30 m³/h
Rated head: 59.1 m
Pump orientation: Vertical
Shaft seal arrangement: Single
Code for shaft seal: HQQE
Approvals on nameplate: CE,EAC,UKCA,WRAS,ACS
Curve tolerance: ISO9906:2012 3B

Materials:
Base: Stainless steel
EN 1.4408
AISI 316
Impeller: Stainless steel
EN 1.4401
AISI 316
Bearing: SIC
Support bearing: Graflon

Installation:
Maximum ambient temperature: 60 °C
Maximum operating pressure: 16 bar
Max pressure at stated temp: 16 bar / 120 °C
16 bar / -40 °C

Qty.	Description	
	Type of connection:	DIN
	Size of inlet connection:	DN 65
	Size of outlet connection:	DN 65
	Pressure rating for connection:	PN 40
	Flange size for motor:	FF265
	Electrical data:	
	Motor standard:	IEC
	Motor type:	132SB
	IE Efficiency class:	IE3
	Rated power - P2:	7.5 kW
	Power (P2) required by pump:	7.5 kW
	Mains frequency:	50 Hz
	Rated voltage:	3 x 380-415D/660-690Y V
	Rated current:	14,4-14,0/8,30-8,10 A
	Starting current:	780-910 %
	Cos phi - power factor:	0.88-0.82
	Rated speed:	2910-2920 rpm
	Efficiency:	IE3 90,1%
	Motor efficiency at full load:	90.1-90.4 %
	Motor efficiency at 3/4 load:	90.8 %
	Motor efficiency at 1/2 load:	90.8 %
	Number of poles:	2
	Enclosure class (IEC 34-5):	55 Dust/Jetting
	Insulation class (IEC 85):	F
	Motor No:	85U17522
	Others:	
	Minimum efficiency index, MEI ≥:	0.70
	Net weight:	112 kg
	Gross weight:	135 kg
	Shipping volume:	0.309 m³
	Danish VVS No.:	385916040
	Country of origin:	DK
	Custom tariff no.:	84137075

96122357 CRN 32-4 A-F-A-E-HQQE 50 Hz

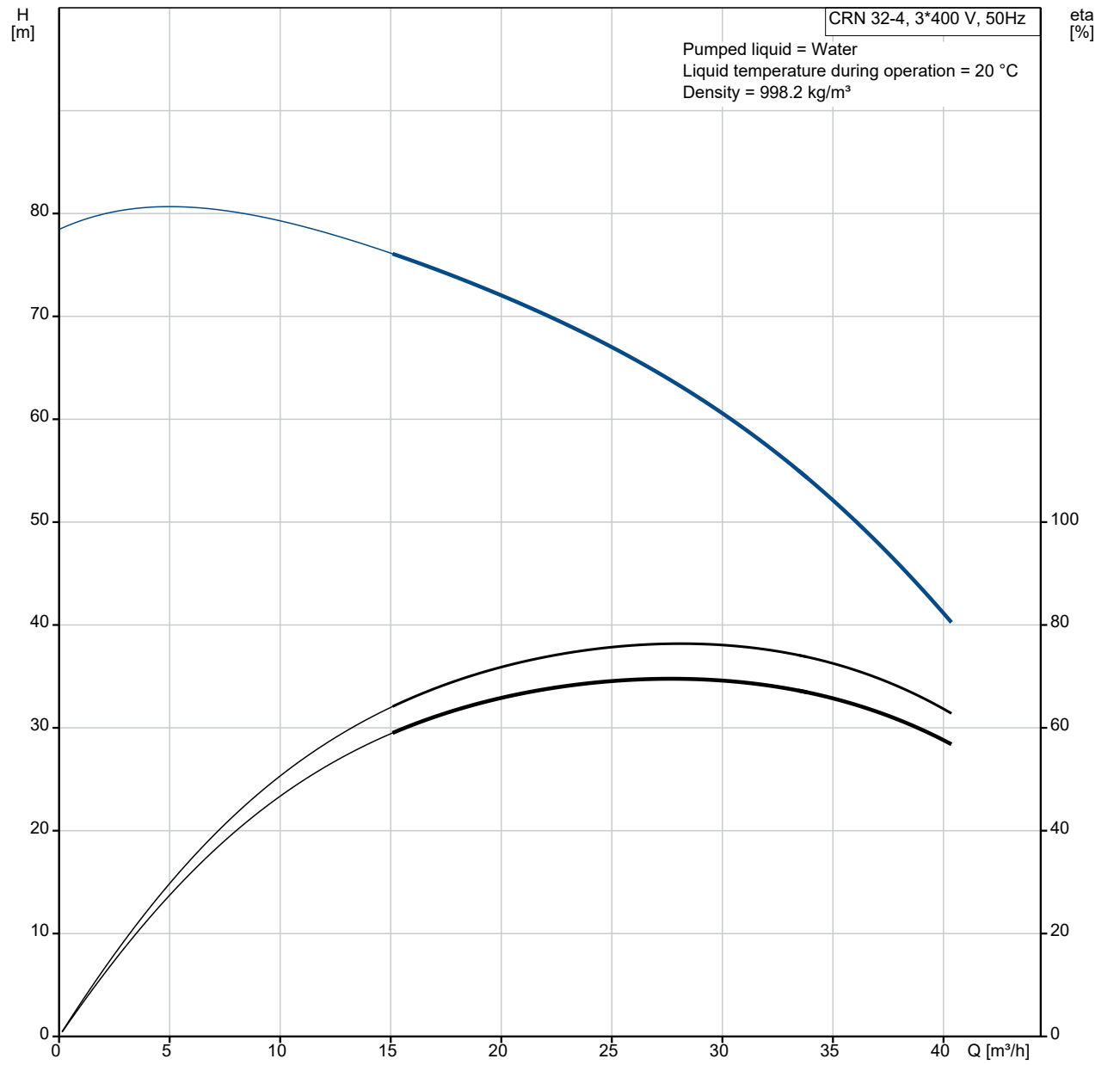

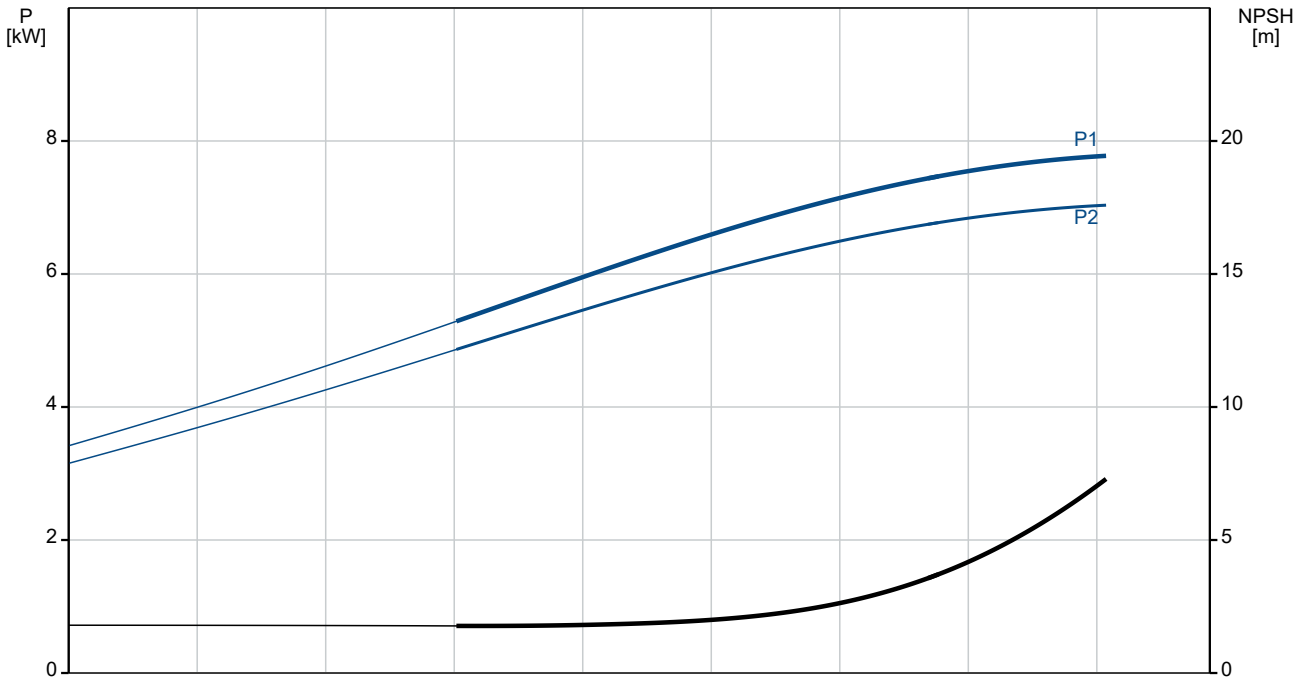

Description	Value
General information:	
Product name:	CRN 32-4 A-F-A-E-HQQE
Product No:	96122357
EAN number:	5700396684017
Technical:	
Pump speed on which pump data are based:	2919 rpm
Rated flow:	30 m³/h
Rated head:	59.1 m
Maximum head:	77.8 m
Stages:	4
Impellers:	4
Number of reduced-diameter impellers:	0
Low NPSH:	N
Pump orientation:	Vertical
Shaft seal arrangement:	Single
Code for shaft seal:	HQQE
Approvals on nameplate:	CE,EAC,UKCA,WRAS,ACS
Curve tolerance:	ISO9906:2012 3B
Pump version:	A
Model:	B
Materials:	
Base:	Stainless steel
Base:	EN 1.4408
Base:	AISI 316
Impeller:	Stainless steel
Impeller:	EN 1.4401
Impeller:	AISI 316
Material code:	A
Code for rubber:	E
Bearing:	SIC
Support bearing:	Graflon
Installation:	
Maximum ambient temperature:	60 °C
Maximum operating pressure:	16 bar
Max pressure at stated temp:	16 bar / 120 °C
Max pressure at stated temp:	16 bar / -40 °C
Type of connection:	DIN
Size of inlet connection:	DN 65
Size of outlet connection:	DN 65
Pressure rating for connection:	PN 40
Flange size for motor:	FF265
Connect code:	F
Liquid:	
Pumped liquid:	Water
Liquid temperature range:	-40 .. 120 °C
Selected liquid temperature:	20 °C
Density:	998.2 kg/m³
Electrical data:	
Motor standard:	IEC
Motor type:	132SB
IE Efficiency class:	IE3
Rated power - P2:	7.5 kW
Power (P2) required by pump:	7.5 kW
Mains frequency:	50 Hz
Rated voltage:	3 x 380-415D/660-690Y V
Rated current:	14,4-14,0/8,30-8,10 A
Starting current:	780-910 %
Cos phi - power factor:	0.88-0.82
Rated speed:	2910-2920 rpm
Efficiency:	IE3 90,1%
Motor efficiency at full load:	90.1-90.4 %

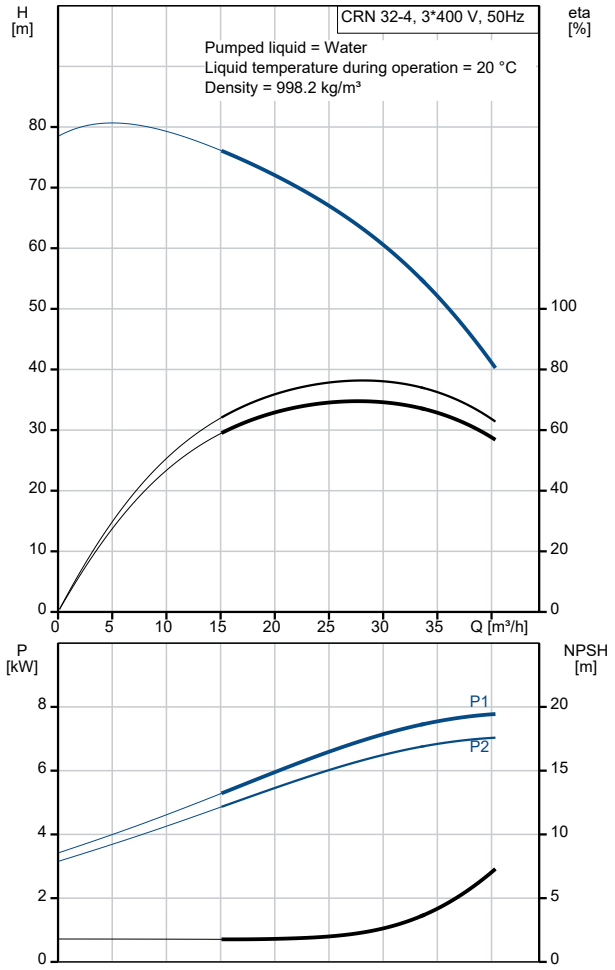

Description	Value
Motor efficiency at 3/4 load:	90.8 %
Motor efficiency at 1/2 load:	90.8 %
Number of poles:	2
Enclosure class (IEC 34-5):	55 Dust/Jetting
Insulation class (IEC 85):	F
Motor protec:	PTC
Motor No:	85U17522
Controls:	
Frequency converter:	NONE
Others:	
Minimum efficiency index, MEI ≥:	0.70
Net weight:	112 kg
Gross weight:	135 kg
Shipping volume:	0.309 m³
Danish VVS No.:	385916040
Country of origin:	DK
Custom tariff no.:	84137075

96122357 CRN 32-4 A-F-A-E-HQQE 50 Hz

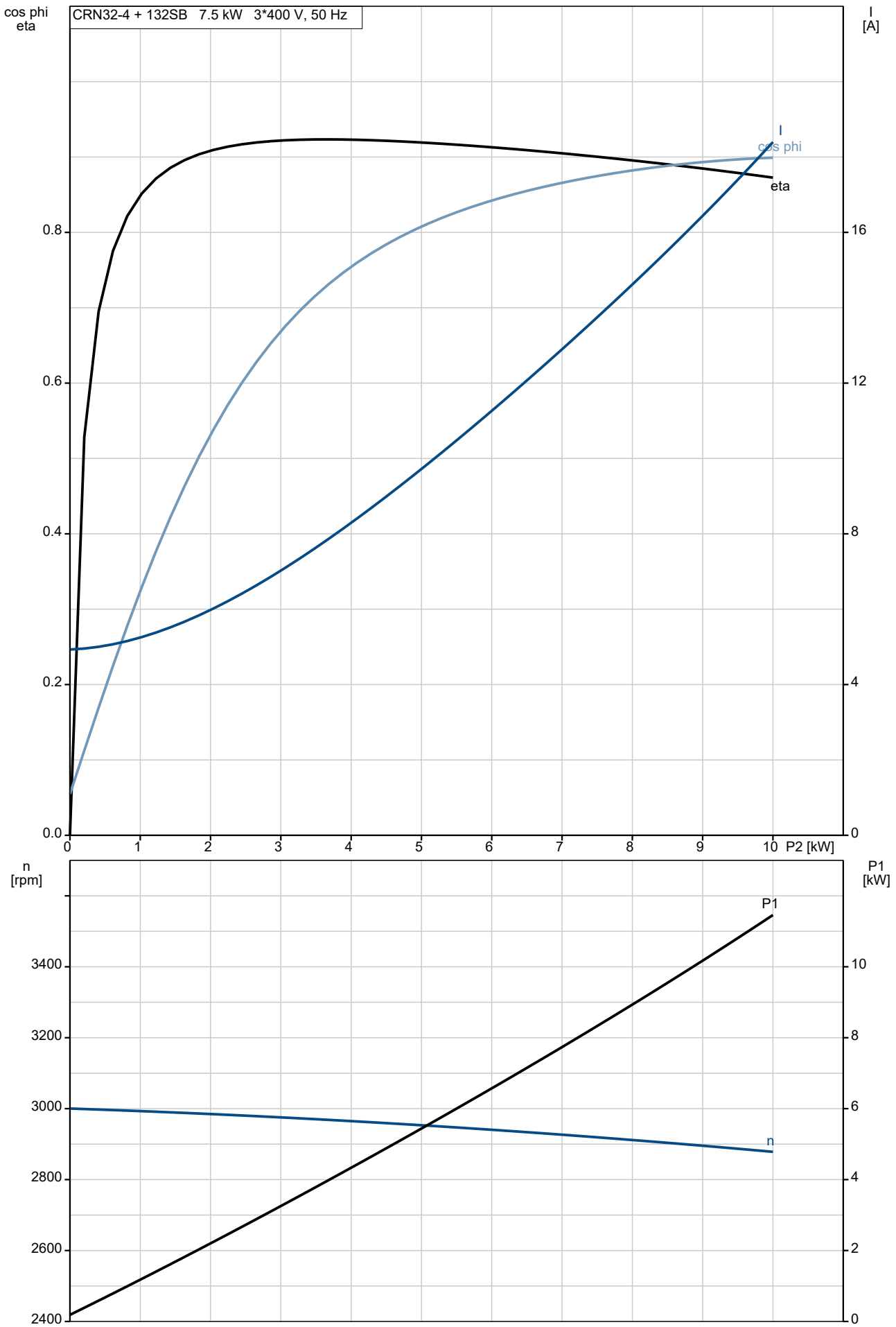

96122357 CRN 32-4 A-F-A-E-HQQE 50 Hz

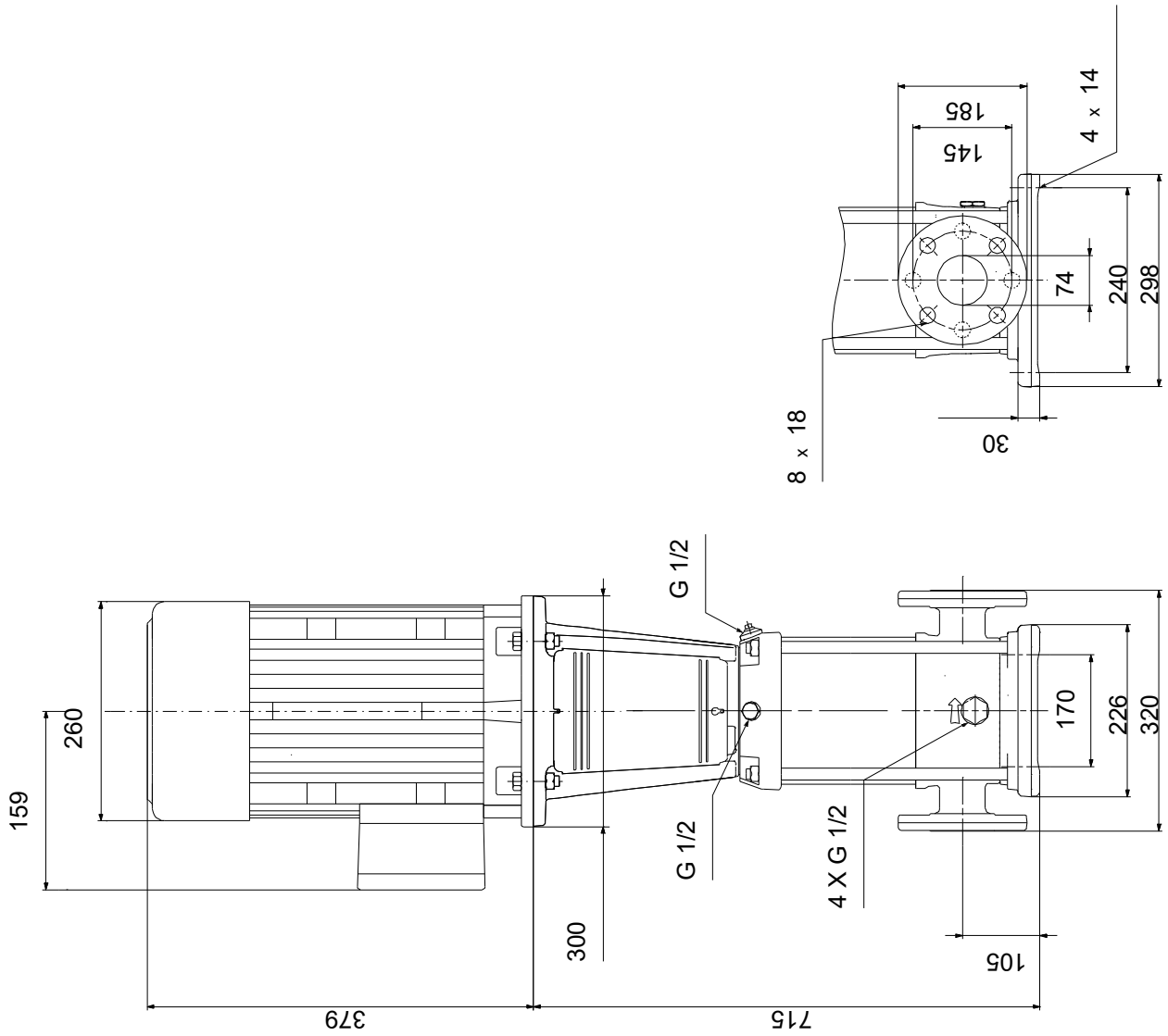

Note! All units are in [mm] unless others are stated.
Disclaimer: This simplified dimensional drawing does not show all details.

Spare parts CRN 32-4, Product No. 96122357
Produced After 1410 (production year and week number)

	Pos	Omschrijving	Opmerking tekst	Classificatie Gegevens	Onderdeelnr.	Aantal	Eenheid
-		Base			98925061	1	pcs
	6	Base				1	
-		Kit, chamber stack			96416295	1	pcs
-	80	Chamber stack				1	
-	3	Upper chamber cpl.					1
		Guide cup					
		Guide cup					
		Cone					
		Guide					
		Chamber					
		Chamber					
	47d	Lock ring					
	47c	Bush					
-	4a	Intermediate chamber cpl.					1
		Guide cup					
		Guide cup					
		Cone					
		Guide					
		Chamber					
		Chamber					
	45a	Neck ring cpl.					
	47	Bearing					
-	4	Intermediate chamber cpl.					2
		Guide cup					
		Guide cup					
		Cone					
		Guide					
		Chamber					
		Chamber					
	45a	Neck ring cpl.					
	47d	Lock ring					
	47c	Bush					
	26c	Washer		Designation: DIN 125A			2
				Thickness: 1,6			
	26b	Hex socket head cap screw					2
	26a	Strap cpl.		Length (mm): 289			2
				Thread: M8			
-	44	Suction interconnector cpl.					1
	44a	Suction interconnector					
	45	Seal ring					
	46	Neck ring					
	65	Top f/neck ring					
-	47a	Bearing cpl.					1
		Driver					
		Holder					
		Disc spring					
		Bearing ring					
-	49e	Impeller cpl.					4
	48	Nut					
	49b	Split cone					
-	49	Impeller					
		Impeller hub					
	49c	Wear ring					
	51	Shaft					1
-		Kit, chambers			98633738	1	pcs
-	4a	Intermediate chamber cpl.				1	
		Guide cup					1
		Guide cup					1
		Cone					1

Pos	Omschrijving	Opmerking tekst	Classificatie Gegevens	Onderdeelnr.	Aantal	Eenheid
	Guide					10
	Chamber					1
	Chamber					1
45a	Neck ring cpl.					1
47	Bearing					1
- 47a	Bearing cpl.				1	
	Driver					1
	Holder					1
	Disc spring					1
	Bearing ring					1
-	Kit, coupling			96416591	1	pcs
	Adjusting fork				1	
9	Hex socket head cap screw		Designation: DIN 912		4	
			Length (mm): 25			
			Thread: M10			
10a	Coupling		Type: SPACER		1	
-	Kit, coupling guard			96505134	1	pcs
7a	Socket button head screw				4	
7	Coupling guard				2	
-	Kit, cover			98832448	1	pcs
58a	Hex socket head cap screw		Designation: DIN 912		4	
			Length (mm): 25			
			Thread: M10			
58	Cover				1	
-	Kit, gaskets			96416597	1	pcs
	Adjusting fork				1	
37	O-ring				2	
38	O-ring				2	
38	O-ring				4	
60	Spring				4	
109	O-ring				1	
110	O-ring		Diameter: 21,2		1	
			Material type: EPDM			
			Thickness: 3,55			
-	Kit, impeller			98633780	1	pcs
48	Nut				1	
48	Nut				1	
49b	Split cone				1	
- 49	Impeller				1	
	Impeller hub					1
49c	Wear ring					1
-	Kit, plug			96505136	1	pcs
- 18	Air vent screw				1	
	Spindle					1
	Plug					1
25	Plug				4	
25	Plug				1	
38	O-ring				2	
38	O-ring				4	
38	O-ring		Diameter: 16,3		2	
			Material type: FKM			
			Thickness: 2,4			
38	O-ring		Diameter: 16,3		4	
			Material type: FKM			
			Thickness: 2,4			
38	O-ring		Diameter: 16,3		6	
			Material type: FKM			
			Thickness: 2,4			
-	Kit, shaft seal HQQE			96525458	1	pcs
	Grinding device				1	
- 105	Shaft seal		Material type: HQQE		1	
	Adjusting fork					1
109	O-ring					1
110	O-ring		Diameter: 21,5			1

Pos	Omschrijving	Opmerking tekst	Classificatie Gegevens	Onderdeelnr.	Aantal	Eenheid
			Material type: EPDM			
			Thickness: 4,25			
-	Kit, wear parts			98497451	1	pcs
45	Seal ring				7	
47d	Lock ring				7	
47c	Bush				5	
49c	Wear ring				7	
65	Top f/neck ring				7	
-	Motor			91333038	1	pcs
-	Kit, bearing cpl.			96796642	1	
111	Ball bearing		Designation: 6206.2Z.C3.SYN			1
153	Angular-contact bearing					1
157	O-ring		Diameter: 62			1
			Material type: NBR			
			Thickness: 3			
158	Waved washer					2
159.b	V-ring					1
159	V-ring					1
-	Kit, eyebolt			96279874	1	
189	Lifting eye					1
-	Kit, fan			96796189	1	
156	Fan					1
-	Kit, fan cover			96796188	1	
151	Fan cover					1
152	Pan head thread forming screw					4
-	Kit, flange			96796224	1	
156.b	Flange					1
159.b	V-ring					1
185c	Nut					4
185	Hex socket head cap screw					4
186	Drain plug					4
-	Kit, gaskets			96798510	1	
184	O-ring					2
-	Kit, ND-end shield cpl.			96796598	1	
156.a	End shield NDE					1
157	O-ring		Diameter: 62			1
			Material type: NBR			
			Thickness: 3			
158	Waved washer					1
159	V-ring					1
185.c	Nut					4
185.a	Hex socket head cap screw					4
-	Kit, shaft seal			96843458	1	
159.b	V-ring					1
159	V-ring					1
-	Kit, terminal board			96030209	1	
	Bracket cpl.					1
163	Hex socket head screw					1
176	Terminal					1
176	Terminal board					1
178	Connecting piece					3
179	Cable shoe					6
180a	Slot cheese head screw		Designation: COMBI TORX T25			6
			Length (mm): 10			
			Thread: M5			
180	Wire clamp					6
-	Kit, terminal box cover			96796215	1	

	Pos	Omschrijving	Opmerking tekst	Classificatie Gegevens	Onderdeelnr.	Aantal	Eenheid
	164	Terminal box cover w/gasket					1
	166	Pan head thread forming screw					4
	1a	Motor stool			96547431	1	pcs
	2	Pump head			98593646	1	pcs
-	3	Upper chamber cpl.			98633870	1	pcs
	47c	Bush			99321194	1	
	4	Intermediate chamber cpl.			99481487	2	pcs
-	4a	Intermediate chamber cpl.			99262783	1	pcs
	47	Bearing			99964632	1	
	47	Bearing			99928986	1	
-	4	Intermediate chamber cpl.			99481488	2	pcs
	45a	Neck ring cpl.			96547322	1	
	4	Intermediate chamber cpl.			98633840	2	pcs
-	6	Base cpl.		Rubber type: EPDM	96587693	1	pcs
	25	Plug			96536013	4	
	37	O-ring			96536149	1	
	38	O-ring			99198815	4	
	38	O-ring			99412727	4	
	56	Base plate			96587691	1	
	7a	Socket button head screw			96549696	4	pcs
	7	Coupling guard			96603300	2	pcs
	8	Coupling cpl.		Dimension: 22/38	96587705	1	pcs
	9	Hex socket head cap screw		Designation: DIN 912	99789390	4	pcs
				Length (mm): 25			
				Thread: M10			
	18	Air vent screw			96547461	1	pcs
	18	Air vent screw			95061351	1	pcs
	25	Plug			96536013	1	pcs
	26c	Washer		Designation: DIN 125A	99262704	2	pcs
				Thickness: 1,6			
	26c	Washer		Designation: DIN 125A	99886930	2	pcs
				Thickness: 1,6			
	26b	Hex socket head cap screw			98931380	2	pcs
	26a	Strap cpl.		Length (mm): 289	98983859	2	pcs
				Thread: M8			
	26	Staybolt		Length (mm): 492	98976683	4	pcs
				Thread: M16			
	28	Hex socket head cap screw		Designation: DIN 912	96536147	4	pcs
				Length (mm): 50			
				Thread: M10			
	28	Hex head screw		Length (mm): 45 MM	96620474	4	pcs
				Thread: M12			
	32	Washer		Designation: DIN 125 A2	99944260	4	pcs
				Internal diameter: 17			
				Outer diameter: 30			
				Thickness: 3			
	32	Washer		Designation: DIN 125 A	99883474	8	pcs
				Internal diameter: 13			
				Outer diameter: 24			
				Thickness: 2,5			
	36	Nut		Thread: M16	99944257	4	pcs
	36	Nut		Thread: M12	96620479	4	pcs
	37	O-ring			96536149	1	pcs
	38	O-ring			99198815	2	pcs
	38	O-ring			99412727	2	pcs
-	44	Suction interconnector cpl.			98633886	1	pcs
	45	Seal ring			97915217	1	
	65	Top f/neck ring			96534931	1	
	47a	Bearing cpl.			99366796	1	pcs
	47a	Bearing cpl.			99620191	1	pcs
	47a	Bearing cpl.			96534932	1	pcs
-	49e	Impeller cpl.			98394326	4	pcs
	48	Nut			99262680	1	
	48	Nut			99262683	1	

	Pos	Omschrijving	Opmerking tekst	Classificatie Gegevens	Onderdeelnr.	Aantal	Eenheid
	48	Nut			96536016	1	
	49b	Split cone			96536010	1	
-	49	Impeller			96534933	1	
	49c	Wear ring			96534930	1	
	51	Shaft			98506279	1	pcs
	55	Outer sleeve		Outer diameter: 197	98896484	1	pcs
				Length (mm): 305,5			
	58	Cover			98893158	1	pcs
	60	Spring			96536032	4	pcs
-	105	Shaft seal		Material type: HQQE	96984086	1	pcs
		Adjusting fork			96587896	1	
	109	O-ring			99651108	1	
	109	O-ring			96547586	1	
	105	Shaft seal		Material type: HQQE	96984070	1	pcs
	440b	Lock ring			96534918	1	pcs