Inventflow: Grundfos A-partner

Grundfos CRE 32-7 A-F-A-E-HQQE

Find the pump here:
https://inventflow.nl/en/pompenfilter/cre/grundfos-cre-32-7-a-f-a-e-hqqe

Contact

info@inventflow.nl
+31 (0) 546 45 80 72

Datasheet

Qty.	Description
1	**CRE 32-7 A-F-A-E-HQQE**

Product No.: 96122665
Vertical, non-self-priming, multistage, in-line, centrifugal pump for installation in pipe systems and mounting on a foundation.

The pump has the following characteristics:
- Impellers and intermediate chambers are made of

Impeller: Stainless steel DIN W.-Nr. EN 1.4301.
Pump housing: - Pump head and base are made of Cast iron.
- The shaft seal has assembly length according to EN 12756.
- Power transmission is via cast iron split coupling.

Flange standard: - Pipework connection is via DIN flanges.

The pump is fitted with an IEC-flanged three-phase MGE motor with frequency converter and PI-controller integrated in the motor terminal box. No additional motor protection is required as both motor and electronics are protected by integrated overload and temperature protection.

External sensor can be connected if controlled pump operation based on for example flow, differential pressure or temperature is required.

A control panel enables setting of required setpoint as well as setting of pump to MIN or MAX operation or to STOP. The control panel has indicator lights for "Operation" and "Fault".

Communication with the pump is possible by means of Grundfos R100 Remote Control enabling further settings as well as reading out of a number of parameters such as "Actual value", "Speed", "Power input" and total "Power consumption".

The terminal box holds terminals for the connection of:
- Pump start/stop (potential-free contact),
- external remote setpoint setting via analog signal, 0 - 5 V, 0 - 10 V, 0(4) - 20 mA,
- 5 V voltage supply for setpoint potentiometer, Imax = 5 mA,
- sensor, 0 - 5 V, 0 - 10 V, 0(4) - 20 mA,
- 24 V voltage supply for sensor, Imax = 40 mA,
- input for forced control to MIN, MAX, External fault or Flowswitch (potential-free contact),
- potential-free fault signal relay with changeover contact, reporting Fault, Operation or Ready,
- RS485 GENIbus.

Controls:
Frequency converter: Built-in

Qty.	Description	
	Pressure sensor:	N
	Liquid:	
	Pumped liquid:	Water
	Liquid temperature range:	-30 .. 120 °C
	Selected liquid temperature:	20 °C
	Density:	998.2 kg/m³
	Technical:	
	Pump speed on which pump data are based:	3556 rpm
	Rated flow:	36 m³/h
	Rated head:	153.8 m
	Pump orientation:	Vertical
	Shaft seal arrangement:	Single
	Code for shaft seal:	HQQE
	Approvals on nameplate:	CE,EAC,UKCA,WRAS,ACS
	Curve tolerance:	ISO9906:2012 3B
	Materials:	
	Base:	Cast iron
		EN 1563 EN-GJS-500-7
		ASTM A536 80-55-06
	Impeller:	Stainless steel
		EN 1.4301
		AISI 304
	Bearing:	SIC
	Support bearing:	Graflon
	Installation:	
	Maximum ambient temperature:	40 °C
	Maximum operating pressure:	30 bar
	Max pressure at stated temp:	30 bar / 120 °C
		30 bar / -30 °C
	Type of connection:	DIN
	Size of inlet connection:	DN 65
	Size of outlet connection:	DN 65
	Pressure rating for connection:	PN 40
	Flange size for motor:	FF300
	Electrical data:	
	Motor standard:	IEC
	Motor type:	180MB
	IE Efficiency class:	IE3
	Rated power - P2:	22 kW
	Power (P2) required by pump:	22 kW
	Mains frequency:	50 Hz
	Rated voltage:	3 x 380-480 V
	Rated current:	43.5-35.0 A
	Cos phi - power factor:	0.91-0.90
	Rated speed:	480-3540 rpm
	Efficiency:	IE3 92,7%
	Motor efficiency at full load:	92.7 %
	Number of poles:	2
	Enclosure class (IEC 34-5):	IP55
	Insulation class (IEC 85):	F
	Motor No:	85901027
	Others:	
	Minimum efficiency index, MEI ≥:	0.70
	DOE Pump Energy Index CL:	0.00
	DOE Pump Energy Index VL:	0.00
	Net weight:	234 kg
	Gross weight:	285 kg
	Shipping volume:	1.13 m³
	Danish VVS No.:	385946770

Qty.	Description
	Finnish LVI No.: 4925712 Country of origin: DK Custom tariff no.: 84137075

96122665 CRE 32-7 A-F-A-E-HQQE 50 Hz

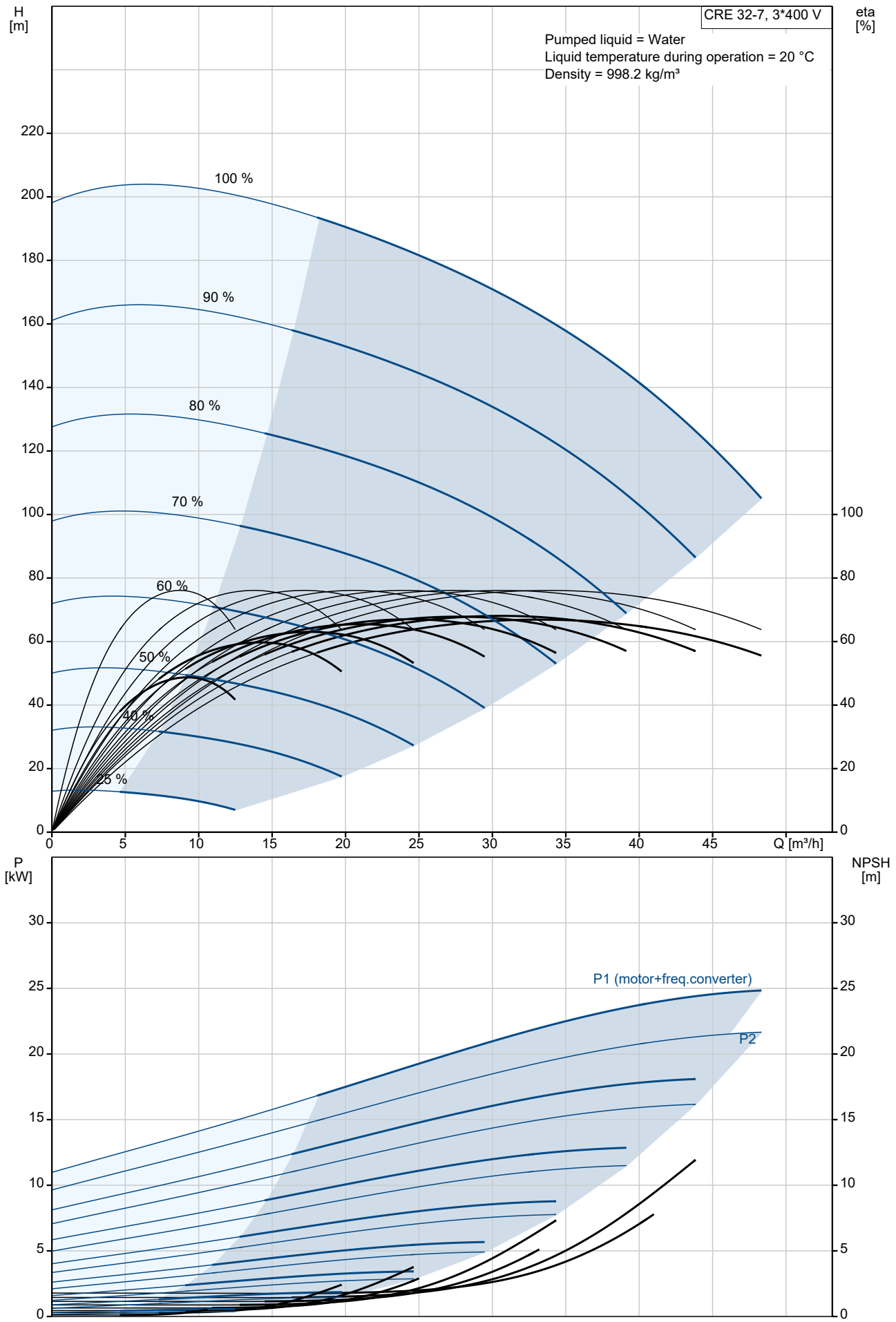

Description	Value
General information:	
Product name:	CRE 32-7 A-F-A-E-HQQE
Product No:	96122665
EAN number:	5700396687094
Technical:	
Pump speed on which pump data are based:	3556 rpm
Rated flow:	36 m³/h
Rated head:	153.8 m
Maximum head:	196.8 m
Stages:	7
Impellers:	7
Number of reduced-diameter impellers:	0
Low NPSH:	N
Pump orientation:	Vertical
Shaft seal arrangement:	Single
Code for shaft seal:	HQQE
Approvals on nameplate:	CE,EAC,UKCA,WRAS,ACS
Curve tolerance:	ISO9906:2012 3B
Pump version:	A
Model:	B
Materials:	
Base:	Cast iron
Base:	EN 1563 EN-GJS-500-7
Base:	ASTM A536 80-55-06
Impeller:	Stainless steel
Impeller:	EN 1.4301
Impeller:	AISI 304
Material code:	A
Code for rubber:	E
Bearing:	SIC
Support bearing:	Graflon
Installation:	
Maximum ambient temperature:	40 °C
Maximum operating pressure:	30 bar
Max pressure at stated temp:	30 bar / 120 °C
Max pressure at stated temp:	30 bar / -30 °C
Type of connection:	DIN
Size of inlet connection:	DN 65
Size of outlet connection:	DN 65
Pressure rating for connection:	PN 40
Flange size for motor:	FF300
Connect code:	F
Liquid:	
Pumped liquid:	Water
Liquid temperature range:	-30 .. 120 °C
Selected liquid temperature:	20 °C
Density:	998.2 kg/m³
Electrical data:	
Motor standard:	IEC
Motor type:	180MB
IE Efficiency class:	IE3
Rated power - P2:	22 kW
Power (P2) required by pump:	22 kW
Mains frequency:	50 Hz
Rated voltage:	3 x 380-480 V
Rated current:	43.5-35.0 A
Cos phi - power factor:	0.91-0.90
Rated speed:	480-3540 rpm
Efficiency:	IE3 92,7%
Motor efficiency at full load:	92.7 %
Number of poles:	2
Enclosure class (IEC 34-5):	IP55

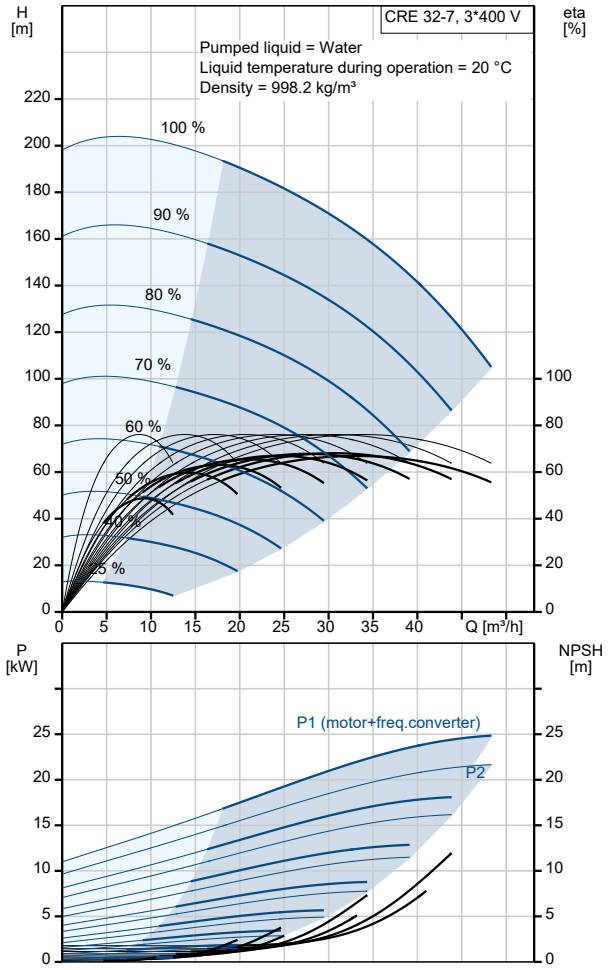

Description	Value
Insulation class (IEC 85):	F
Motor protec:	YES
Motor No:	85901027
Controls:	
Function Module:	ADVANCED I/O
Frequency converter:	Built-in
Pressure sensor:	N
Others:	
Minimum efficiency index, MEI ≥:	0.70
DOE Pump Energy Index CL:	0.00
DOE Pump Energy Index VL:	0.00
Net weight:	234 kg
Gross weight:	285 kg
Shipping volume:	1.13 m³
Config. file no:	95139535
Danish VVS No.:	385946770
Finnish LVI No.:	4925712
Country of origin:	DK
Custom tariff no.:	84137075

96122665 CRE 32-7 A-F-A-E-HQQE 50 Hz

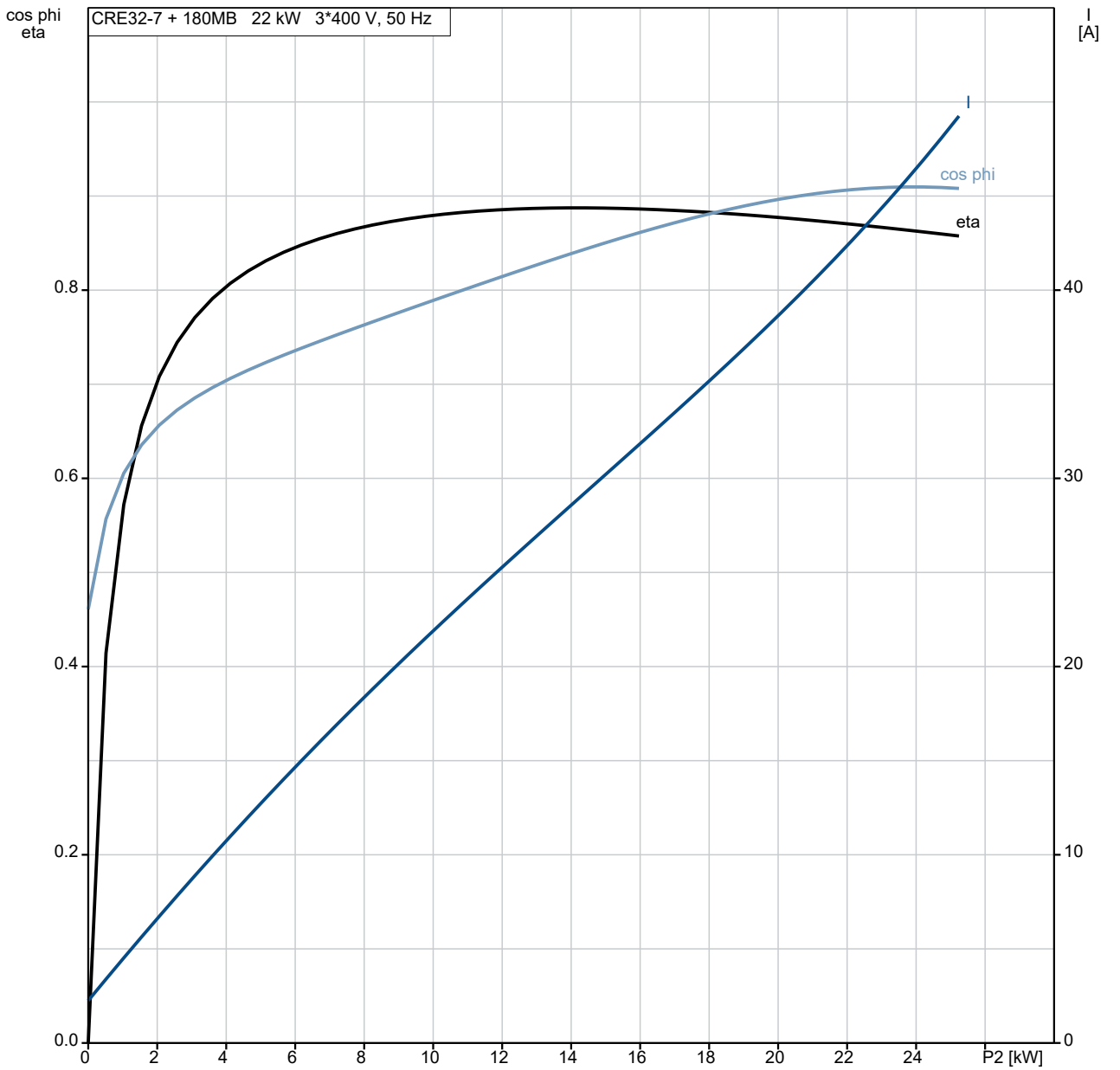

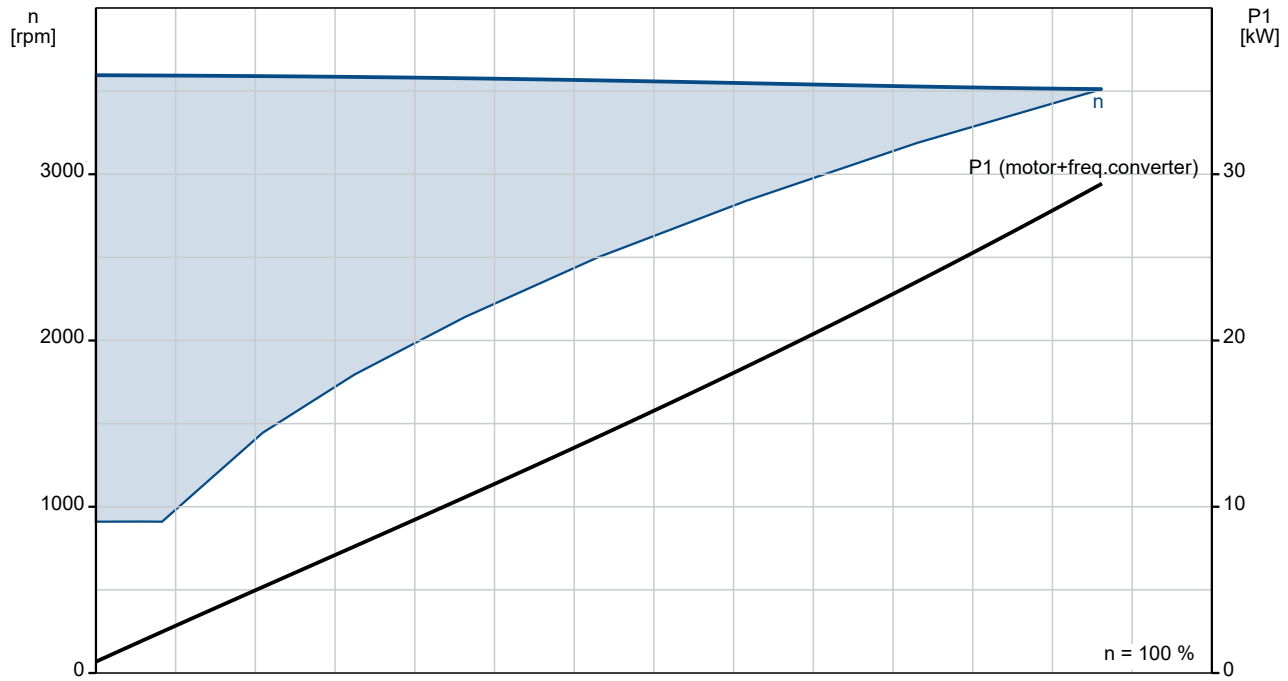

96122665 CRE 32-7 A-F-A-E-HQQE 50 Hz

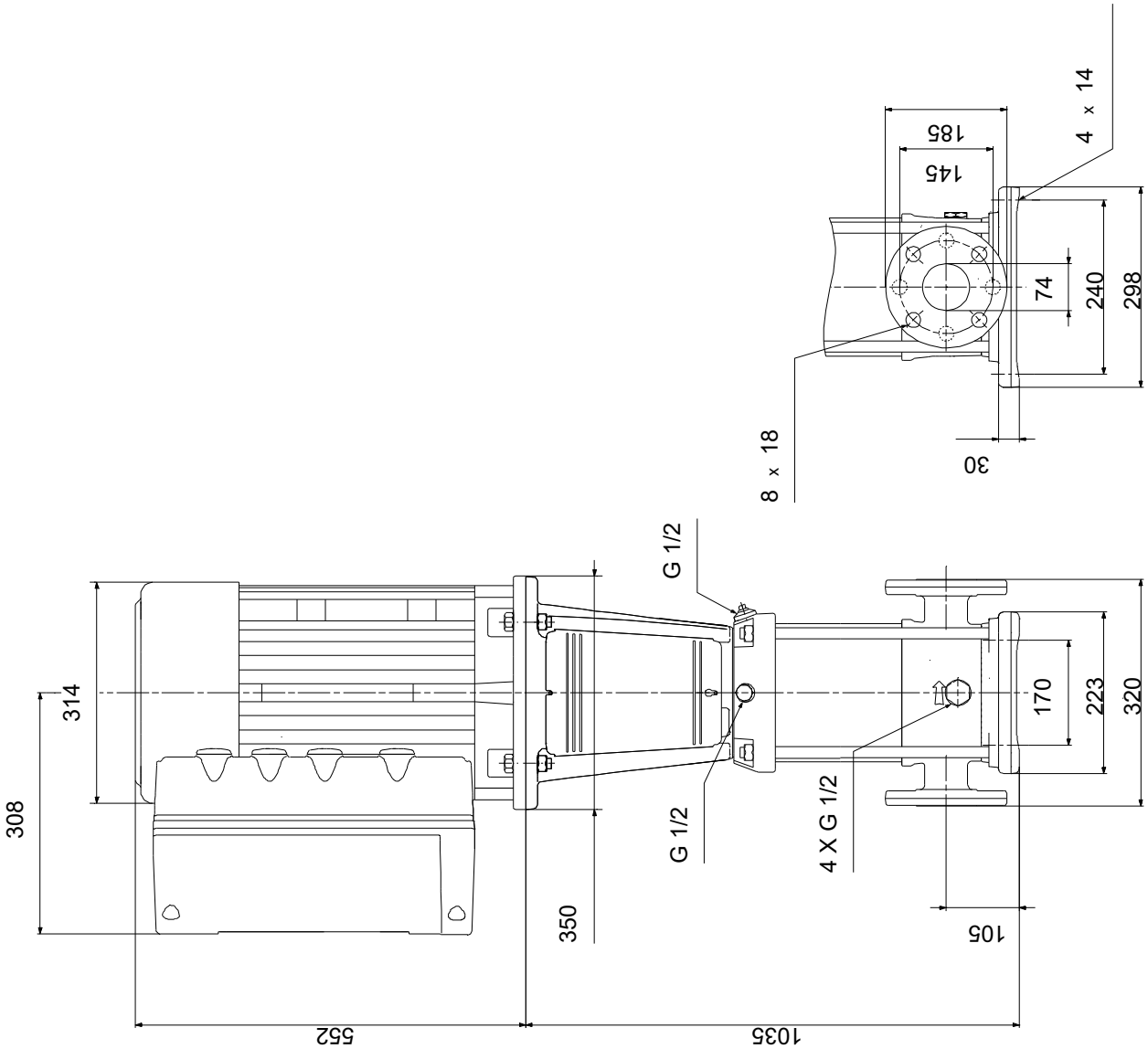

Note! All units are in [mm] unless others are stated.
Disclaimer: This simplified dimensional drawing does not show all details.

Spare parts CRE 32-7, Product No. 96122665
Produced After 1410 (production year and week number)

	Pos	Omschrijving	Opmerking tekst	Classificatie Gegevens	Onderdeelnr.	Aantal	Eenheid
-		Base			96547299	1	pcs
	6	Base				1	
-	80	Kit, chamber stack			96416281	1	pcs
-	80	Chamber stack				1	
-	3	Upper chamber cpl.					1
		Cone					
		Spare, turbulence optimizer KP					
		Spare, turbulence optimizer KP					
		Spare, turbulence optimizer KP					
		Spare, turbulence optimizer KP					
		Guide					
	47d	Lock ring					
	47c	Bush					
-	4a	Intermediate chamber cpl.					2
		Intermediate chamber cpl.					
-	45a	Neck ring cpl.					
	45	Seal ring					
	46	Neck ring					
	65	Top f/neck ring					
	47	Bearing					
-	4	Intermediate chamber cpl.					4
		Cone					
		Spare, turbulence optimizer KP					
		Spare, turbulence optimizer KP					
		Spare, turbulence optimizer KP					
		Spare, turbulence optimizer KP					
		Guide					
-	45a	Neck ring cpl.					
	45	Seal ring					
	46	Neck ring					
	65	Top f/neck ring					
	47d	Lock ring					
	47c	Bush					
	26c	Washer		Designation: DIN 125A			2
				Thickness: 1,6			
	26b	Hex socket head cap screw					2
	26a	Strap cpl.		Length (mm): 499			2
				Thread: M8			
-	44	Suction interconnector cpl.					1
		Suction interconnector					
	45	Seal ring					
	46	Neck ring					
	65	Top f/neck ring					
-	47a	Bearing cpl.					2
		Driver					
		Holder					
		Disc spring					
		Bearing ring					
-	49e	Impeller cpl.					7
	48	Nut					
	49b	Split cone					
-	49	Impeller					
		Impeller hub					
	49c	Wear ring					
	51	Shaft					1
-		Kit, chambers			98497462	1	pcs
-	4a	Intermediate chamber cpl.				1	
		Intermediate chamber cpl.					1
-	45a	Neck ring cpl.					1

Pos	Omschrijving	Opmerking tekst	Classificatie Gegevens	Onderdeelnr.	Aantal	Eenheid
45	Seal ring					
46	Neck ring					
65	Top f/neck ring					
47	Bearing					1
- 47a	Bearing cpl.				1	
	Driver					1
	Holder					1
	Disc spring					1
	Bearing ring					1
-	Kit, coupling			96416593	1	pcs
	Adjusting fork				1	
- 8	Coupling cpl.		Dimension: 22/48		1	
9	Hex socket head cap screw		Designation: DIN 912			4
			Length (mm): 25			
			Thread: M10			
10a	Coupling half					2
-	Kit, coupling guard			96505135	1	pcs
7a	Socket button head screw				4	
7	Coupling guard				2	
-	Kit, cover			98832448	1	pcs
58a	Hex socket head cap screw		Designation: DIN 912		4	
			Length (mm): 25			
			Thread: M10			
58	Cover				1	
-	Kit, gaskets			96416597	1	pcs
	Adjusting fork				1	
37	O-ring				2	
38	O-ring				2	
38	O-ring				4	
60	Spring				4	
109	O-ring				1	
110	O-ring		Diameter: 21,2		1	
			Material type: EPDM			
			Thickness: 3,55			
-	Kit, impeller			98497465	1	pcs
48	Nut				1	
48	Nut				1	
49b	Split cone				1	
- 49	Impeller				1	
	Impeller hub					1
49c	Wear ring					1
-	Kit, plug			96505136	1	pcs
- 18	Air vent screw				1	
	Spindle					1
	Plug					1
25	Plug				4	
25	Plug				1	
38	O-ring				2	
38	O-ring				4	
38	O-ring		Diameter: 16,3		2	
			Material type: FKM			
			Thickness: 2,4			
38	O-ring		Diameter: 16,3		4	
			Material type: FKM			
			Thickness: 2,4			
38	O-ring		Diameter: 16,3		6	
			Material type: FKM			
			Thickness: 2,4			
-	Kit, shaft seal HQQE			96525458	1	pcs
	Grinding device				1	
- 105	Shaft seal		Material type: HQQE		1	
	Adjusting fork					1
109	O-ring					1
110	O-ring		Diameter: 21,5			1

Pos	Omschrijving	Opmerking tekst	Classificatie Gegevens	Onderdeelnr.	Aantal	Eenheid
			Material type: EPDM			
			Thickness: 4,25			
-	Kit, wear parts			98497451	1	pcs
45	Seal ring				7	
47d	Lock ring				7	
47c	Bush				5	
49c	Wear ring				7	
65	Top f/neck ring				7	
-	Motor				1	pcs
-	Kit, bearing cpl.			96796812	1	
153	Angular-contact bearing		Designation: 7310B			1
154	Ball bearing					1
158	Waved washer					2
159	V-ring					1
-	Kit, bearing plate			96796809	1	
155.a	Cover					1
208a	Gasket					3
208	Hex socket head cap screw		Designation: DIN912			3
			Length (mm): 40			
			Thread: M5			
-	Kit, connector plugs			96348923	1	
	Connector plug 5-pole					1
	Connector plug 4-pole					1
	Connector plug 4-pole					1
	Connector plug 3-pole					1
	Connector plug 3-pole					1
	Connector plug 3-pole					1
	Connector plug 3-pole					1
	Connector plug					1
- 273	Kit, control board			96348918	1	
	Service kit instruction					1
	Controlboard					1
-	Kit, eyebolt			96796712	1	
189	Eyebolt					2
-	Kit, fan cover			96830826	1	
151	Fan cover					1
152.a	Rubber bush					4
152	Hex head cap screw					4
196	Diaphragm					1
-	Kit, flange			96796807	1	
156.b	Flange					1
159.b	Seal ring					1
185	Hex socket head cap screw					4
186	Drain plug					4
195.a	Grease nipple					1
-	Kit, funct. module - adv. I/O			96348936	1	
263	Add-on module, cpl. w/plugs					1
-	Kit, funct. module -Geni/RS485			96348932	1	
263	Add-on module, cpl. w/plugs					1
-	Kit, gaskets			96798508	1	
184	O-ring		Diameter: 235			2
275	Kit, inverter board			96348920	1	
-	Kit, lubrication nipple			96796671	1	
195.b	Grease nipple					2
195.a	Grease nipple					1
-	Kit, motor			96844360	1	
	Flex insulation					3
	EMC filter					1
	Cover cpl.					1

Pos	Omschrijving	Opmerking tekst	Classificatie Gegevens	Onderdeelnr.	Aantal	Eenheid
	Motor				1	
99a	Retaining ring				1	
151	Fan cover				1	
152.a	Rubber bush				4	
152	Hex head cap screw				4	
156	Fan				1	
177	Torx Screw				1	
185.b	Nut				4	
196	Diaphragm				1	
273a	Pan head thread forming screw				4	
-	Kit, ND-end shield cpl.			96796810	1	
156a	End shield NDE				1	
158	Waved washer				1	
159	V-ring				1	
185.c	Nut				4	
185.a	Hex socket head cap screw				4	
195.b	Grease nipple				1	
-	Kit, opr. panel			96348924	1	
259	Operation panel				1	
274	Kit, rectifier board			96348921	1	
-	Kit, terminal box			96348914	1	
164	Cover cpl.				1	
166	Pan head thread forming screw				5	
251	Terminal box				1	
277	Blind cover				1	
283	Motor cover cpl.				1	
284	Cover				1	
-	Kit, varistor			96348917	1	
279.b	Pan head thread forming screw				2	
279	Varistor				1	
1a	Motor stool			98993921	1	pcs
2	Pump head			96587722	1	pcs
- 3	Upper chamber cpl.			98633863	1	pcs
47c	Bush			99321194	1	
- 4a	Intermediate chamber cpl.			99262755	2	pcs
47	Bearing			99964632	1	
47	Bearing			99928986	1	
+ 4a	Intermediate chamber cpl.			99363114	2	pcs
- 4	Intermediate chamber cpl.			96534939	4	pcs
- 45a	Neck ring cpl.			98686545	1	
45	Seal ring			97915217	1	
65	Top f/neck ring			96534931	1	
+ 4	Intermediate chamber cpl.			98497466	4	pcs
- 6	Base cpl.		Rubber type: EPDM	96587692	1	pcs
25	Plug			96536013	4	
37	O-ring			96536149	1	
38	O-ring			99198815	4	
38	O-ring			99412727	4	
7a	Socket button head screw			96549696	4	pcs
7	Coupling guard			96603279	2	pcs
9	Hex socket head cap screw		Designation: DIN 912 Length (mm): 25 Thread: M10	99789390	4	pcs
+ 18	Air vent screw			96547461	1	pcs
+ 18	Air vent screw			95061351	1	pcs
25	Plug			96536013	1	pcs
26c	Washer		Designation: DIN 125A Thickness: 1,6	99262704	2	pcs
26c	Washer		Designation: DIN 125A	99886930	2	pcs

	Pos	Omschrijving	Opmerking tekst	Classificatie Gegevens	Onderdeelnr.	Aantal	Eenheid
				Thickness: 1,6			
	26b	Hex socket head cap screw			98931380	2	pcs
	26a	Strap cpl.		Length (mm): 499	98983840	2	pcs
				Thread: M8			
	26	Staybolt		Length (mm): 636	98976698	4	pcs
				Thread: M16			
	28.a	Hex head screw			96620478	4	pcs
	28	Hex socket head cap screw		Designation: DIN 912	96536147	4	pcs
				Length (mm): 50			
				Thread: M10			
	32	Washer		Designation: DIN 125 A	98923051	8	pcs
				Internal diameter: 17			
				Outer diameter: 30			
				Thickness: 3			
	36	Hex nut		Thread: M16	96620480	4	pcs
	37	O-ring			96536149	1	pcs
	38	O-ring			99198815	2	pcs
	38	O-ring			99412727	2	pcs
-	44	Suction interconnector cpl.			96547328	1	pcs
	45	Seal ring			97915217	1	
	65	Top f/neck ring			96534931	1	
+	47a	Bearing cpl.			99366796	2	pcs
+	47a	Bearing cpl.			99620191	2	pcs
+	47a	Bearing cpl.			96534932	2	pcs
-	49e	Impeller cpl.			98287180	7	pcs
	48	Nut			99262680	1	
	48	Nut			99262683	1	
	48	Nut			96536016	1	
	49b	Split cone			96536010	1	
	49c	Wear ring			96534930	1	
+	49e	Impeller cpl.			96534935	7	pcs
+	49e	Impeller cpl.			98394455	7	pcs
	51	Shaft			98506284	1	pcs
	55	Outer sleeve		Outer diameter: 197,0	99051701	1	pcs
				Length (mm): 515,5			
	58	Cover			98893158	1	pcs
	60	Spring			96536032	4	pcs
-	105	Shaft seal		Material type: HQQE	96984086	1	pcs
		Adjusting fork			96587896	1	
	109	O-ring			99651108	1	
	109	O-ring			96547586	1	
+	105	Shaft seal		Material type: HQQE	96984070	1	pcs
	440b	Lock ring			96534918	1	pcs