Inventflow: Grundfos A-partner

Grundfos CR 45-1 A-F-A-E-HQQE

Find the pump here:
https://inventflow.nl/en/pompenfilter/cr/grundfos-cr-45-1-a-f-a-e-hqqe

Contact

info@inventflow.nl
+31 (0) 546 45 80 72

Datasheet

Qty.	Description
1	**CR 45-1 A-F-A-E-HQQE**

Note! Product picture may differ from actual product

Product No.: 96122797
Vertical, non-self-priming, multistage, in-line, centrifugal pump for installation in pipe systems and mounting on a foundation.

The pump has the following characteristics:
- Impellers and intermediate chambers are made of

Impeller: Stainless steel, EN 1.4301.
Pump housing: - Pump head and base are made of Cast iron.
- The shaft seal has assembly length according to EN 12756.
- Power transmission is via cast iron split coupling.

Flange standard: - Pipework connection is via DIN flanges.

Phase: The motor is a 3-phase AC motor.

Controls:
Frequency converter: NONE

Liquid:
Pumped liquid: Water
Liquid temperature range: -30 .. 120 °C
Selected liquid temperature: 20 °C
Density: 998.2 kg/m³

Technical:
Pump speed on which pump data are based: 2917 rpm
Rated flow: 45 m³/h
Rated head: 19.1 m
Pump orientation: Vertical
Shaft seal arrangement: Single
Code for shaft seal: HQQE
Approvals on nameplate: CE,EAC,UKCA,WRAS,ACS
Curve tolerance: ISO9906:2012 3B

Materials:
Base: Cast iron
EN 1563 EN-GJS-500-7
ASTM A536 80-55-06
Impeller: Stainless steel
EN 1.4301
AISI 304
Bearing: SIC
Support bearing: Graflon

Installation:

Qty.	Description
	Maximum ambient temperature: 60 °C Maximum operating pressure: 16 bar Max pressure at stated temp: 16 bar / 120 °C 16 bar / -30 °C Type of connection: DIN Size of inlet connection: DN 80 Size of outlet connection: DN 80 Pressure rating for connection: PN 40 Flange size for motor: FT130 Electrical data: Motor standard: IEC Motor type: 112MC IE Efficiency class: IE3 Rated power - P2: 4 kW Power (P2) required by pump: 4 kW Mains frequency: 50 Hz Rated voltage: 3 x 380-415D V Rated current: 7.9 A Starting current: 1000-1110 % Cos phi - power factor: 0.87-0.87 Rated speed: 2920-2940 rpm Efficiency: IE3 88,1% Motor efficiency at full load: 88.1 % Motor efficiency at 3/4 load: 88.6 % Motor efficiency at 1/2 load: 85.2 % Number of poles: 2 Enclosure class (IEC 34-5): 55 Dust/Jetting Insulation class (IEC 85): F Motor No: 85U15413 Others: Minimum efficiency index, MEI ≥: 0.70 Net weight: 93.3 kg Gross weight: 116 kg Shipping volume: 0.309 m³ Danish VVS No.: 385907010 Finnish LVI No.: 4925483 Country of origin: DK Custom tariff no.: 84137075

96122797 CR 45-1 A-F-A-E-HQQE 50 Hz

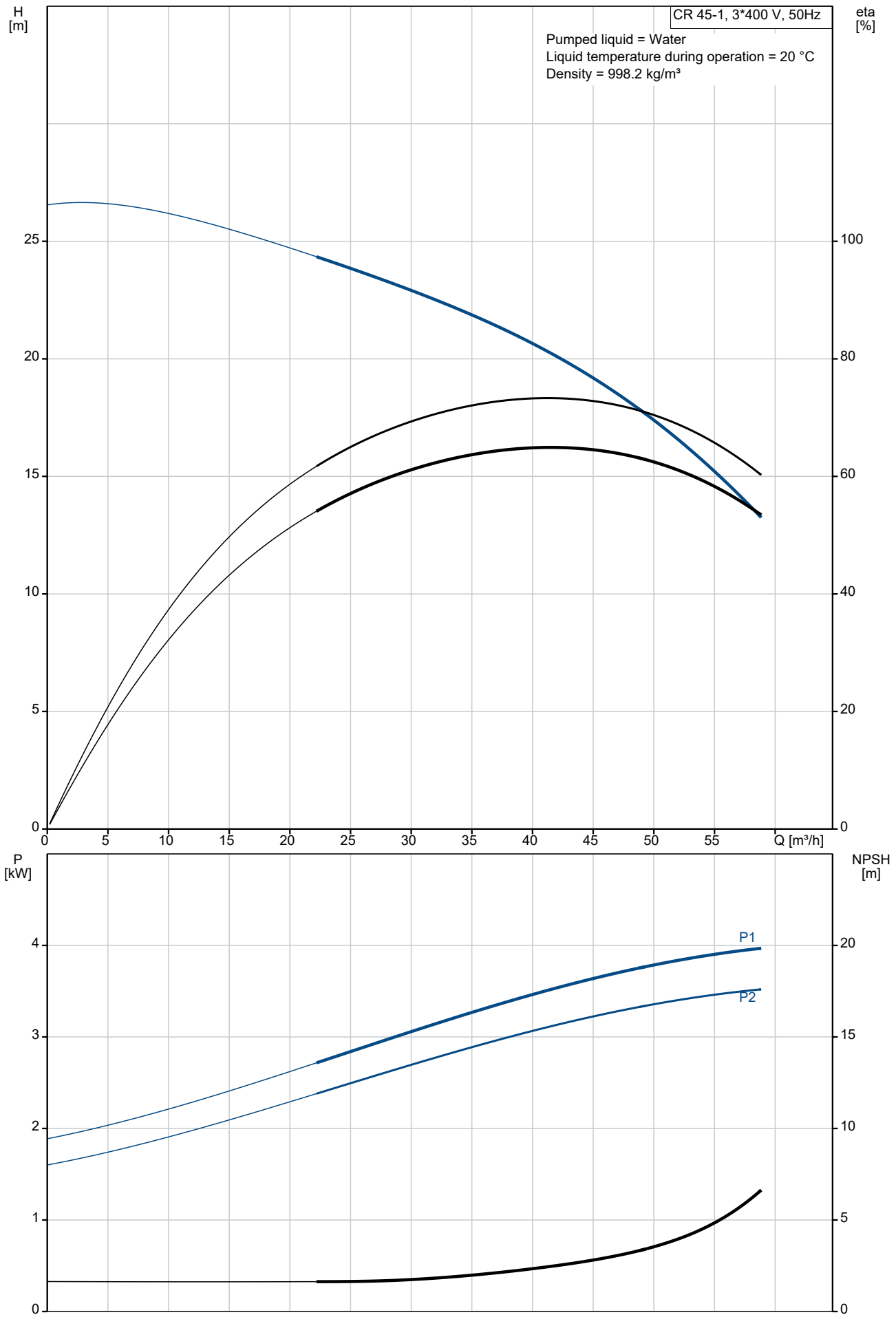

Description	Value
General information:	
Product name:	CR 45-1 A-F-A-E-HQQE
Product No:	96122797
EAN number:	5700396688411
Technical:	
Pump speed on which pump data are based:	2917 rpm
Rated flow:	45 m³/h
Rated head:	19.1 m
Maximum head:	26.6 m
Stages:	1
Impellers:	1
Number of reduced-diameter impellers:	0
Low NPSH:	N
Pump orientation:	Vertical
Shaft seal arrangement:	Single
Code for shaft seal:	HQQE
Approvals on nameplate:	CE,EAC,UKCA,WRAS,ACS
Curve tolerance:	ISO9906:2012 3B
Pump version:	A
Model:	B
Materials:	
Base:	Cast iron
Base:	EN 1563 EN-GJS-500-7
Base:	ASTM A536 80-55-06
Impeller:	Stainless steel
Impeller:	EN 1.4301
Impeller:	AISI 304
Material code:	A
Code for rubber:	E
Bearing:	SIC
Support bearing:	Graflon
Installation:	
Maximum ambient temperature:	60 °C
Maximum operating pressure:	16 bar
Max pressure at stated temp:	16 bar / 120 °C
Max pressure at stated temp:	16 bar / -30 °C
Type of connection:	DIN
Size of inlet connection:	DN 80
Size of outlet connection:	DN 80
Pressure rating for connection:	PN 40
Flange size for motor:	FT130
Connect code:	F
Liquid:	
Pumped liquid:	Water
Liquid temperature range:	-30 .. 120 °C
Selected liquid temperature:	20 °C
Density:	998.2 kg/m³
Electrical data:	
Motor standard:	IEC
Motor type:	112MC
IE Efficiency class:	IE3
Rated power - P2:	4 kW
Power (P2) required by pump:	4 kW
Mains frequency:	50 Hz
Rated voltage:	3 x 380-415D V
Rated current:	7.9 A
Starting current:	1000-1110 %
Cos phi - power factor:	0.87-0.87
Rated speed:	2920-2940 rpm
Efficiency:	IE3 88,1%
Motor efficiency at full load:	88.1 %
Motor efficiency at 3/4 load:	88.6 %

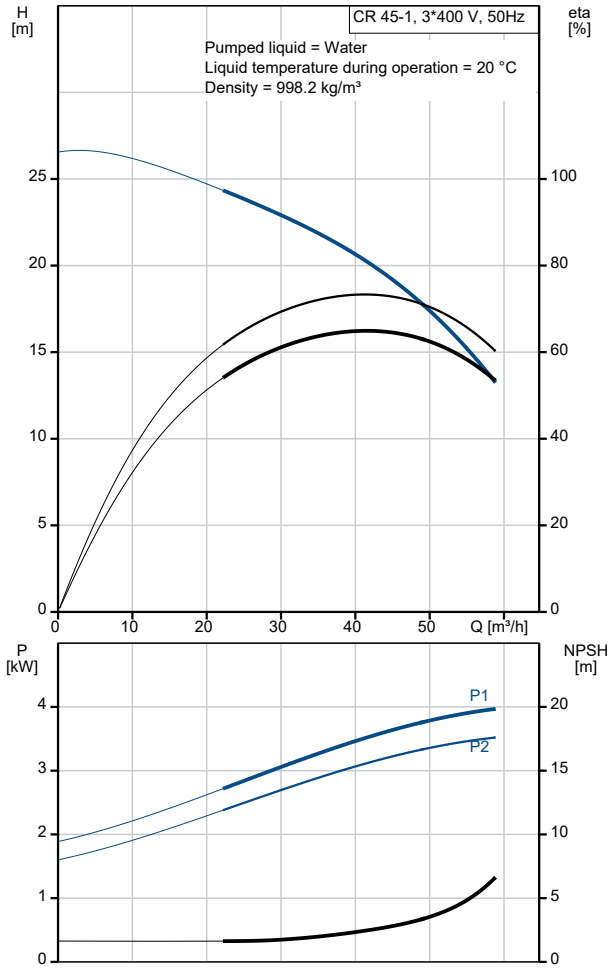

Description	Value
Motor efficiency at 1/2 load:	85.2 %
Number of poles:	2
Enclosure class (IEC 34-5):	55 Dust/Jetting
Insulation class (IEC 85):	F
Motor protec:	PTC
Motor No:	85U15413
Controls:	
Frequency converter:	NONE
Others:	
Minimum efficiency index, MEI ≥:	0.70
Net weight:	93.3 kg
Gross weight:	116 kg
Shipping volume:	0.309 m^3
Danish VVS No.:	385907010
Finnish LVI No.:	4925483
Country of origin:	DK
Custom tariff no.:	84137075

96122797 CR 45-1 A-F-A-E-HQQE 50 Hz

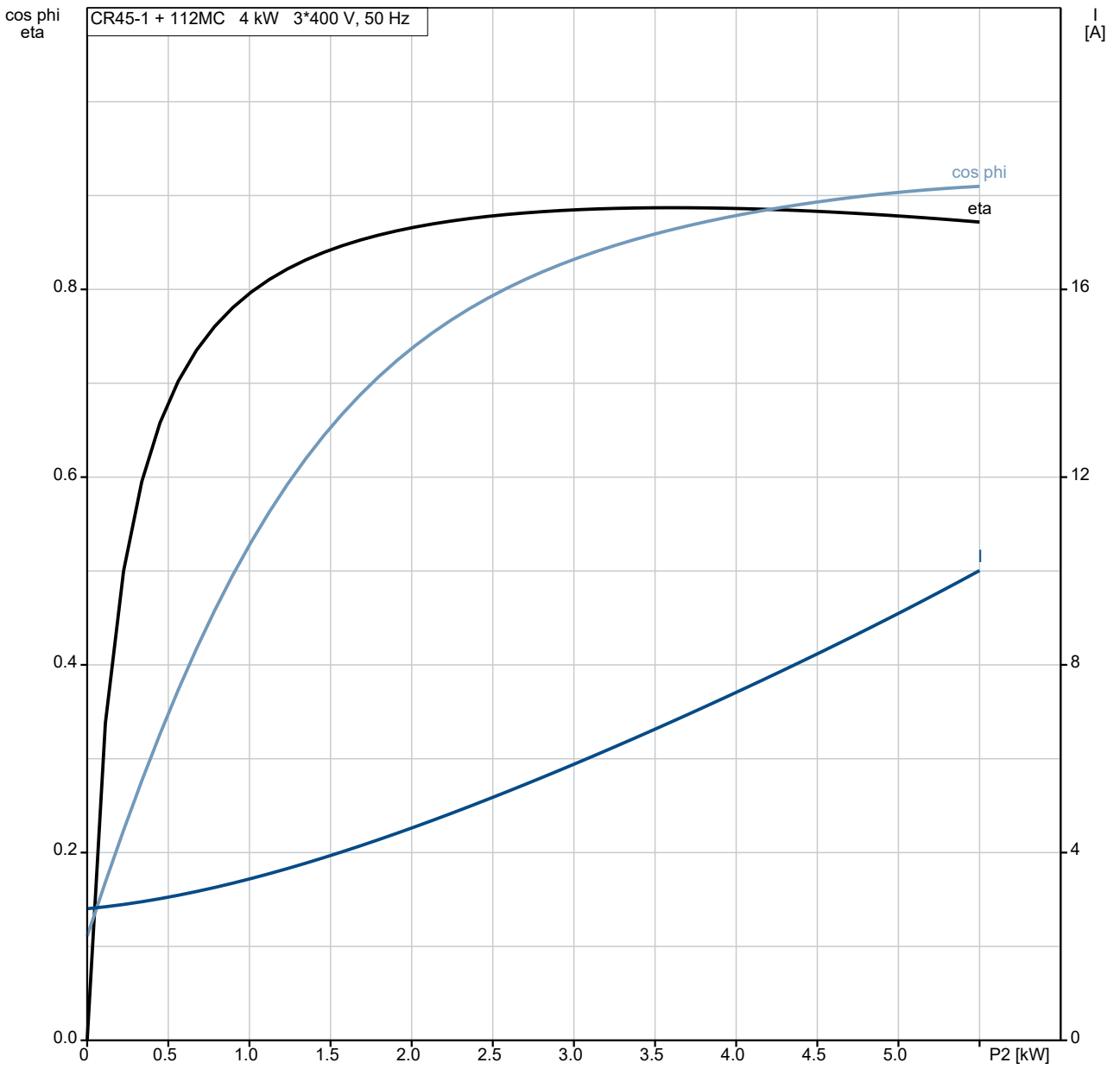

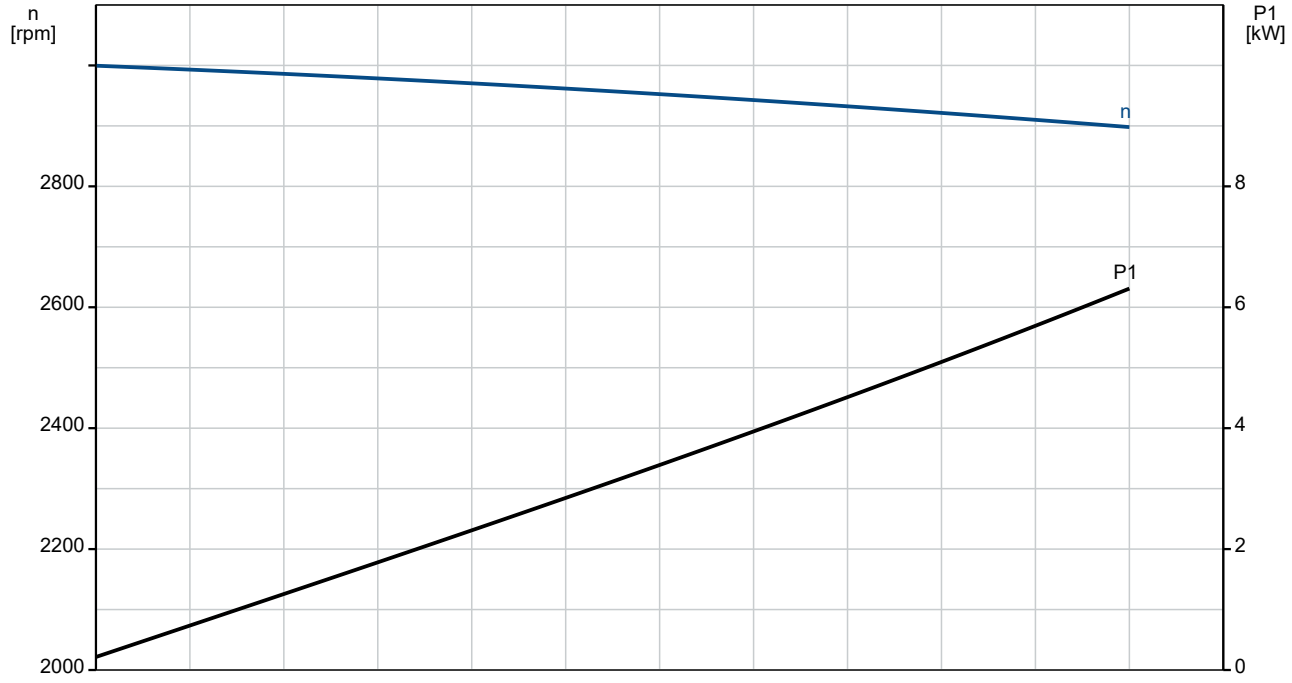

96122797 CR 45-1 A-F-A-E-HQQE 50 Hz

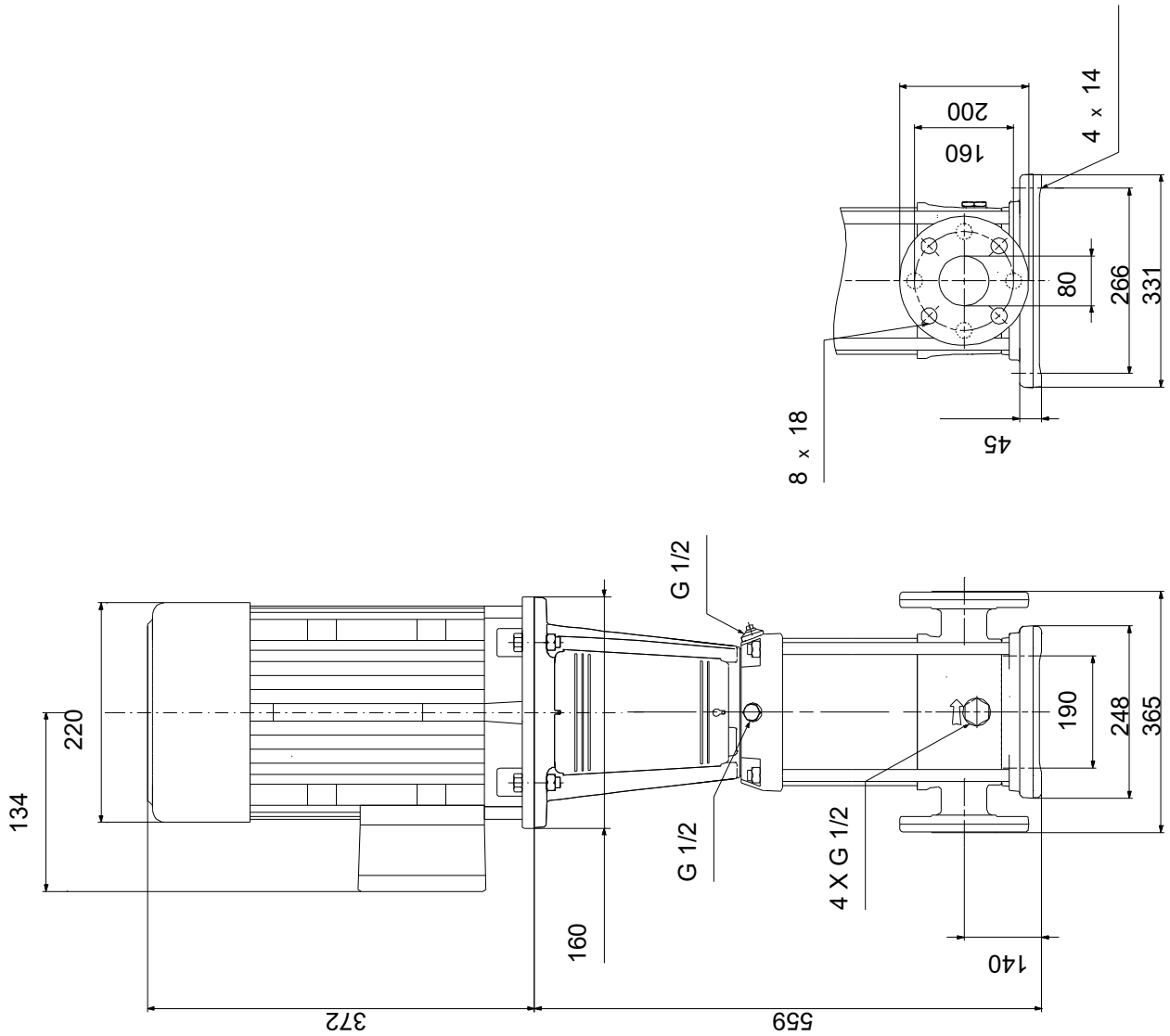

Note! All units are in [mm] unless others are stated.
Disclaimer: This simplified dimensional drawing does not show all details.

Spare parts CR 45-1, Product No. 96122797
Produced After 1410 (production year and week number)

	Pos	Omschrijving	Opmerking tekst	Classificatie Gegevens	Onderdeelnr.	Aantal	Eenheid
-		Base			96587694	1	pcs
	6	Base				1	
-		Kit, chamber stack			96416223	1	pcs
-	80	Chamber stack				1	
-	3	Upper chamber cpl.					1
		Guide cup					
		Guide cup					
		Cone					
		Guide vane					
		Chamber					
		Chamber					
	47	Bearing					
	26c	Washer		Designation: DIN 125A			2
				Thickness: 1,6			
	26b	Hex socket head cap screw					2
-	26a	Strap cpl.		Length (mm): 89			2
				Thread: M8			
		Strip					
		Nut					
-	44	Suction interconnector cpl.					1
		Suction interconnector					
	45	Seal ring					
	46	Neck ring					
	65	Top f/neck ring					
-	47a	Bearing cpl.					1
		Driver					
		Holder					
		Disc spring					
		Bearing ring					
	47f	Hairpin clip					
-	49e	Impeller cpl.					1
	48	Nut					
	49b	Split cone					
-	49	Impeller					
		Impeller hub					
	49c	Wear ring					
	51	Shaft					1
-		Kit, chambers			98633982	1	pcs
-	3	Upper chamber cpl.				1	
		Guide cup					1
		Guide cup					1
		Cone					1
		Guide vane					10
		Chamber					1
		Chamber					1
	47	Bearing					1
-	47a	Bearing cpl.				1	
		Driver					1
		Holder					1
		Disc spring					1
		Bearing ring					1
	47f	Hairpin clip					1
-		Kit, coupling			96416590	1	pcs
		Adjusting fork				1	
	9	Hex socket head cap screw		Designation: DIN 912		4	
				Length (mm): 25			
				Thread: M10			
	10a	Coupling				1	
-		Kit, coupling guard			96505134	1	pcs

Pos	Omschrijving	Opmerking tekst	Classificatie Gegevens	Onderdeelnr.	Aantal	Eenheid
7a	Socket button head screw				4	
7	Coupling guard				2	
-	Kit, cover			98832448	1	pcs
58a	Hex socket head cap screw		Designation: DIN 912		4	
			Length (mm): 25			
			Thread: M10			
58	Cover				1	
-	Kit, gaskets			96416599	1	pcs
	Adjusting fork				1	
37	O-ring				2	
38	O-ring				2	
38	O-ring				4	
60	Spring				4	
109	O-ring				1	
110	O-ring		Diameter: 21,2		1	
			Material type: EPDM			
			Thickness: 3,55			
-	Kit, impeller			98497488	1	pcs
48	Nut				1	
48	Nut				1	
49b	Split cone				1	
- 49	Impeller				1	
	Impeller hub					1
49c	Wear ring					1
-	Kit, plug			96505136	1	pcs
- 18	Air vent screw				1	
	Spindle					1
	Plug					1
25	Plug				4	
25	Plug				1	
38	O-ring				2	
38	O-ring				4	
38	O-ring		Diameter: 16,3		2	
			Material type: FKM			
			Thickness: 2,4			
38	O-ring		Diameter: 16,3		4	
			Material type: FKM			
			Thickness: 2,4			
38	O-ring		Diameter: 16,3		6	
			Material type: FKM			
			Thickness: 2,4			
-	Kit, shaft seal HQQE			96525458	1	pcs
	Grinding device				1	
- 105	Shaft seal		Material type: HQQE		1	
	Adjusting fork					1
109	O-ring					1
110	O-ring		Diameter: 21,5			1
			Material type: EPDM			
			Thickness: 4,25			
-	Kit, wear parts			98497473	1	pcs
45	Seal ring				2	
47d	Lock ring				2	
47c	Bush				1	
49c	Wear ring				2	
65	Top f/neck ring				2	
-	Motor			85903740	1	pcs
-	Kit, bearing cpl.			96279802	1	
111	Ball bearing		Designation: 6206.2Z.C3.SYN			1
153	Angular-contact bearing					1
157	O-ring		Diameter: 62			1
			Material type: NBR			
			Thickness: 3			
158	Waved washer					2
-	Kit, end shield			96279790	1	

Pos	Omschrijving	Opmerking tekst	Classificatie Gegevens	Onderdeelnr.	Aantal	Eenheid
156a	End shield				1	
157	O-ring		Diameter: 62		1	
			Material type: NBR			
			Thickness: 3			
158	Waved washer				1	
159a	Seal ring				1	
-	Kit, eyebolt			96279825	1	
189	Eyebolt				1	
-	Kit, fan			96279758	1	
156	Fan				1	
159c	Seal ring				1	
159a	Seal ring				1	
-	Kit, fan cover			96279756	1	
151b	Label				1	
151	Fan cover				1	
152	Pan head thread forming screw				4	
-	Kit, flange			96279779	1	
156b	Flange				1	
159.c	Seal ring				1	
186	Drain plug				3	
-	Kit, shaft seal			96279763	1	
159c	Seal ring				1	
159a	Seal ring				1	
-	Kit, staybolts			96279793	1	
181	Pan head staybolt				4	
-	Kit, terminal board			96279769	1	
	Bracket cpl.				1	
163	Hex socket head screw				1	
173a	Base				1	
173	Pan head thread forming screw		Designation: COMBI TORX T25		1	
176	Slot cheese head screw		Designation: COMBI TORX T25		6	
			Length (mm): 10			
			Thread: M5			
176	Terminal				1	
176	Connecting piece				3	
176	Wire clamp				3	
176	Terminal board				1	
177	Pan head screw				1	
-	Kit, terminal box			96279772	1	
164	Terminal box cover w/gasket				1	
166	Pan head thread forming screw				4	
1a	Motor stool			96587723	1	pcs
2	Pump head			96547433	1	pcs
- 3	Upper chamber cpl.			99262935	1	pcs
47	Bearing			99964632	1	
47	Bearing			99928986	1	
7a	Socket button head screw			96549696	4	pcs
7	Coupling guard			96603300	2	pcs
9	Hex socket head cap screw		Designation: DIN 912	99789390	4	pcs
			Length (mm): 25			
			Thread: M10			
18	Air vent screw			96547461	1	pcs
18	Air vent screw			95061351	1	pcs
25	Plug			96536013	1	pcs

Pos	Omschrijving	Opmerking tekst	Classificatie Gegevens	Onderdeelnr.	Aantal	Eenheid
26c	Washer		Designation: DIN 125A	99262704	2	pcs
			Thickness: 1,6			
26c	Washer		Designation: DIN 125A	99886930	2	pcs
			Thickness: 1,6			
26b	Hex socket head cap screw			98931380	2	pcs
26a	Strap cpl.		Length (mm): 89	98983868	2	pcs
			Thread: M8			
26	Staybolt		Length (mm): 250	98976735	4	pcs
			Thread: M16			
28a	Hex head screw		Length (mm): 20	99932722	4	pcs
			Thread: M8			
28	Hex socket head cap screw		Designation: DIN 912	96536147	4	pcs
			Length (mm): 50			
			Thread: M10			
32	Washer		Designation: DIN 125 A	98923051	4	pcs
			Internal diameter: 17			
			Outer diameter: 30			
			Thickness: 3			
36	Hex nut		Thread: M16	96620480	4	pcs
37	O-ring			96536142	1	pcs
38	O-ring			99198815	2	pcs
38	O-ring			99412727	2	pcs
- 44	Suction interconnector cpl.			98634054	1	pcs
45	Seal ring			97911448	1	
45	Seal ring			96535952	1	
65	Top f/neck ring			96547390	1	
- 47a	Bearing cpl.			99270651	1	pcs
47f	Hairpin clip			99908983	1	
49b	Split cone			96536010	1	pcs
- 49	Impeller			96535946	1	pcs
49c	Wear ring			96535949	1	
51	Shaft			98506302	1	pcs
55	Outer sleeve		Outer diameter: 216	98820219	1	pcs
			Length (mm): 103,5			
58	Cover			98893158	1	pcs
60	Spring			96536032	4	pcs
- 105	Shaft seal		Material type: HQQE	96984086	1	pcs
	Adjusting fork			96587896	1	
109	O-ring			99651108	1	
109	O-ring			96547586	1	
105	Shaft seal		Material type: HQQE	96984070	1	pcs
440b	Lock ring			96535943	1	pcs