Inventflow: Grundfos A-partner

Grundfos CRN 45-2-2 A-F-A-E-HQQE

Find the pump here:
https://inventflow.nl/en/pompenfilter/crn/grundfos-crn-45-2-2-a-f-a-e-hqqe

Contact

info@inventflow.nl
+31 (0) 546 45 80 72

Datasheet

Qty.	Description
1	**CRN 45-2-2 A-F-A-E-HQQE**

Product No.: 96123118
Vertical, non-self-priming, multistage, in-line, centrifugal pump for installation in pipe systems and mounting on a foundation.

The pump has the following characteristics:
- Impellers, intermediate chambers and outer sleeve are made of

Impeller: Stainless steel, EN 1.4401.
- Pump head cover and base are made of

Pump housing: Stainless steel, EN 1.4408.
- The shaft seal has assembly length according to EN 12756.
- Power transmission is via cast iron split coupling.

Flange standard: - Pipework connection is via DIN flanges/couplings.

Phase: The motor is a 3-phase AC motor.

Controls:
Frequency converter: NONE

Liquid:
Pumped liquid: Water
Liquid temperature range: -40 .. 120 °C
Selected liquid temperature: 20 °C
Density: 998.2 kg/m³

Technical:
Pump speed on which pump data are based: 2919 rpm
Rated flow: 45 m³/h
Rated head: 30.6 m
Pump orientation: Vertical
Shaft seal arrangement: Single
Code for shaft seal: HQQE
Approvals on nameplate: CE,EAC,UKCA,WRAS,ACS
Curve tolerance: ISO9906:2012 3B

Materials:
Base: Stainless steel
EN 1.4408
AISI 316
Impeller: Stainless steel
EN 1.4401
AISI 316
Bearing: SIC
Support bearing: Graflon

Installation:
Maximum ambient temperature: 60 °C
Maximum operating pressure: 16 bar
Max pressure at stated temp: 16 bar / 120 °C
16 bar / -40 °C

Qty.	Description	
	Type of connection:	DIN
	Size of inlet connection:	DN 80
	Size of outlet connection:	DN 80
	Pressure rating for connection:	PN 40
	Flange size for motor:	FF265
	Electrical data:	
	Motor standard:	IEC
	Motor type:	132SC
	IE Efficiency class:	IE3
	Rated power - P2:	5.5 kW
	Power (P2) required by pump:	5.5 kW
	Mains frequency:	50 Hz
	Rated voltage:	3 x 380-415D V
	Rated current:	11 A
	Starting current:	1080-1180 %
	Cos phi - power factor:	0.87-0.82
	Rated speed:	2920-2940 rpm
	Efficiency:	IE3 89,2%
	Motor efficiency at full load:	89.2 %
	Motor efficiency at 3/4 load:	90.0 %
	Motor efficiency at 1/2 load:	89.6 %
	Number of poles:	2
	Enclosure class (IEC 34-5):	55 Dust/Jetting
	Insulation class (IEC 85):	F
	Motor No:	85U17417
	Others:	
	Minimum efficiency index, MEI ≥:	0.70
	Net weight:	105 kg
	Gross weight:	128 kg
	Shipping volume:	0.309 m³
	Danish VVS No.:	385917022
	Country of origin:	DK
	Custom tariff no.:	84137075

96123118 CRN 45-2-2 A-F-A-E-HQQE 50 Hz

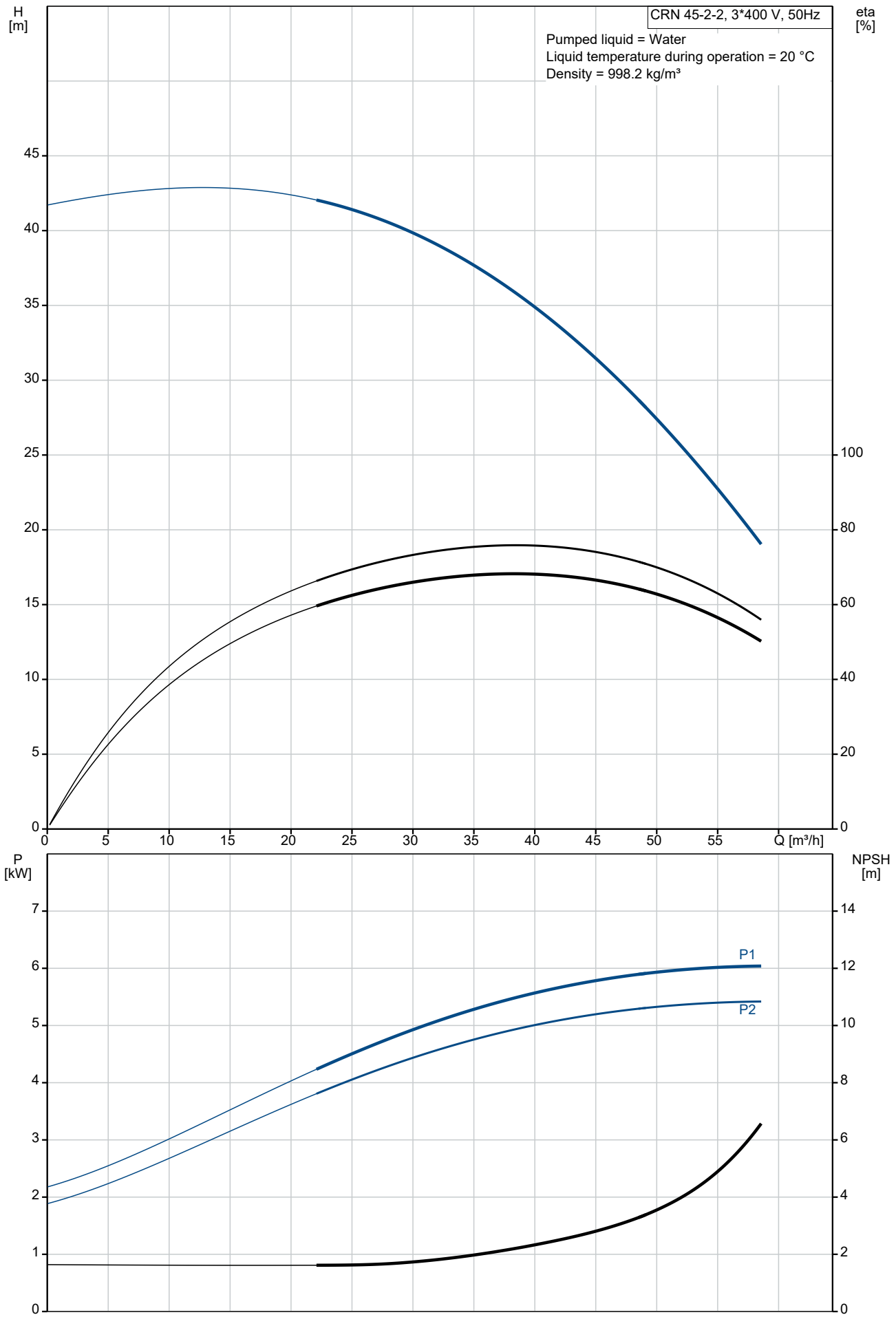

Description	Value
General information:	
Product name:	CRN 45-2-2 A-F-A-E-HQQE
Product No:	96123118
EAN number:	5700396691633
Technical:	
Pump speed on which pump data are based:	2919 rpm
Rated flow:	45 m³/h
Rated head:	30.6 m
Maximum head:	41.4 m
Stages:	2
Impellers:	2
Number of reduced-diameter impellers:	2
Low NPSH:	N
Pump orientation:	Vertical
Shaft seal arrangement:	Single
Code for shaft seal:	HQQE
Approvals on nameplate:	CE,EAC,UKCA,WRAS,ACS
Curve tolerance:	ISO9906:2012 3B
Pump version:	A
Model:	B
Materials:	
Base:	Stainless steel
Base:	EN 1.4408
Base:	AISI 316
Impeller:	Stainless steel
Impeller:	EN 1.4401
Impeller:	AISI 316
Material code:	A
Code for rubber:	E
Bearing:	SIC
Support bearing:	Graflon
Installation:	
Maximum ambient temperature:	60 °C
Maximum operating pressure:	16 bar
Max pressure at stated temp:	16 bar / 120 °C
Max pressure at stated temp:	16 bar / -40 °C
Type of connection:	DIN
Size of inlet connection:	DN 80
Size of outlet connection:	DN 80
Pressure rating for connection:	PN 40
Flange size for motor:	FF265
Connect code:	F
Liquid:	
Pumped liquid:	Water
Liquid temperature range:	-40 .. 120 °C
Selected liquid temperature:	20 °C
Density:	998.2 kg/m³
Electrical data:	
Motor standard:	IEC
Motor type:	132SC
IE Efficiency class:	IE3
Rated power - P2:	5.5 kW
Power (P2) required by pump:	5.5 kW
Mains frequency:	50 Hz
Rated voltage:	3 x 380-415D V
Rated current:	11 A
Starting current:	1080-1180 %
Cos phi - power factor:	0.87-0.82
Rated speed:	2920-2940 rpm
Efficiency:	IE3 89,2%
Motor efficiency at full load:	89.2 %
Motor efficiency at 3/4 load:	90.0 %

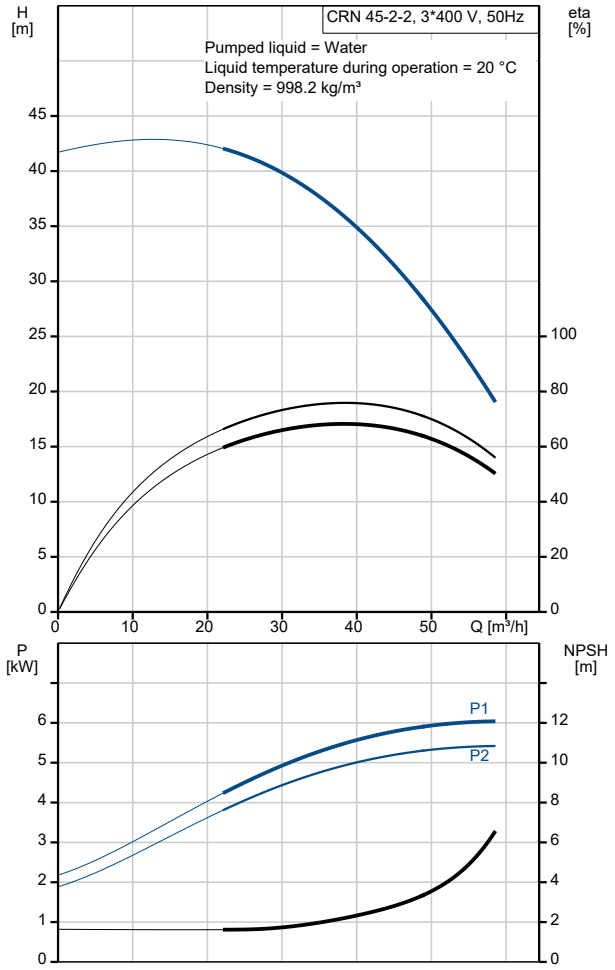

Description	Value
Motor efficiency at 1/2 load:	89.6 %
Number of poles:	2
Enclosure class (IEC 34-5):	55 Dust/Jetting
Insulation class (IEC 85):	F
Motor protec:	PTC
Motor No:	85U17417
Controls:	
Frequency converter:	NONE
Others:	
Minimum efficiency index, MEI ≥:	0.70
Net weight:	105 kg
Gross weight:	128 kg
Shipping volume:	0.309 m³
Danish VVS No.:	385917022
Country of origin:	DK
Custom tariff no.:	84137075

96123118 CRN 45-2-2 A-F-A-E-HQQE 50 Hz

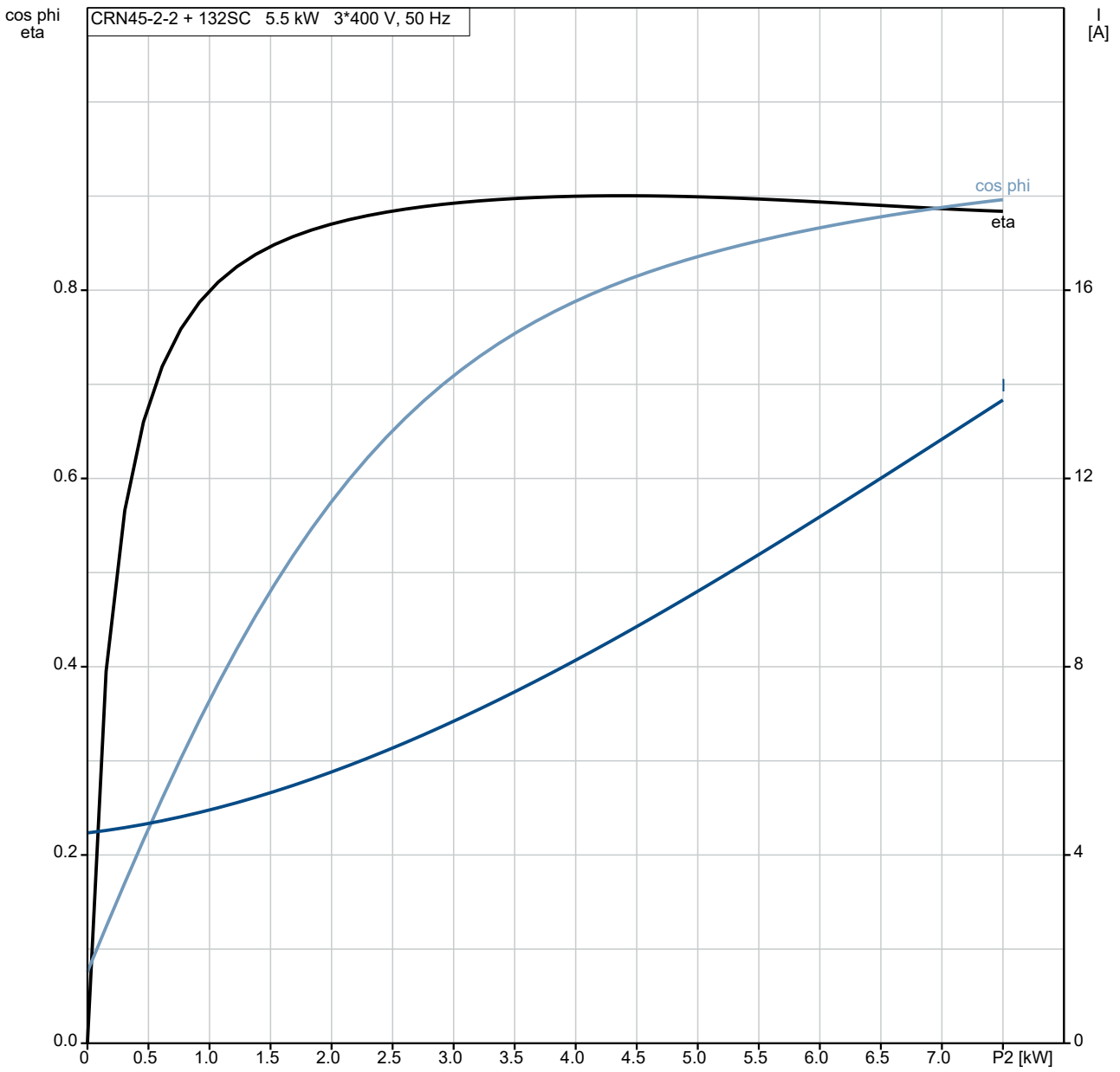

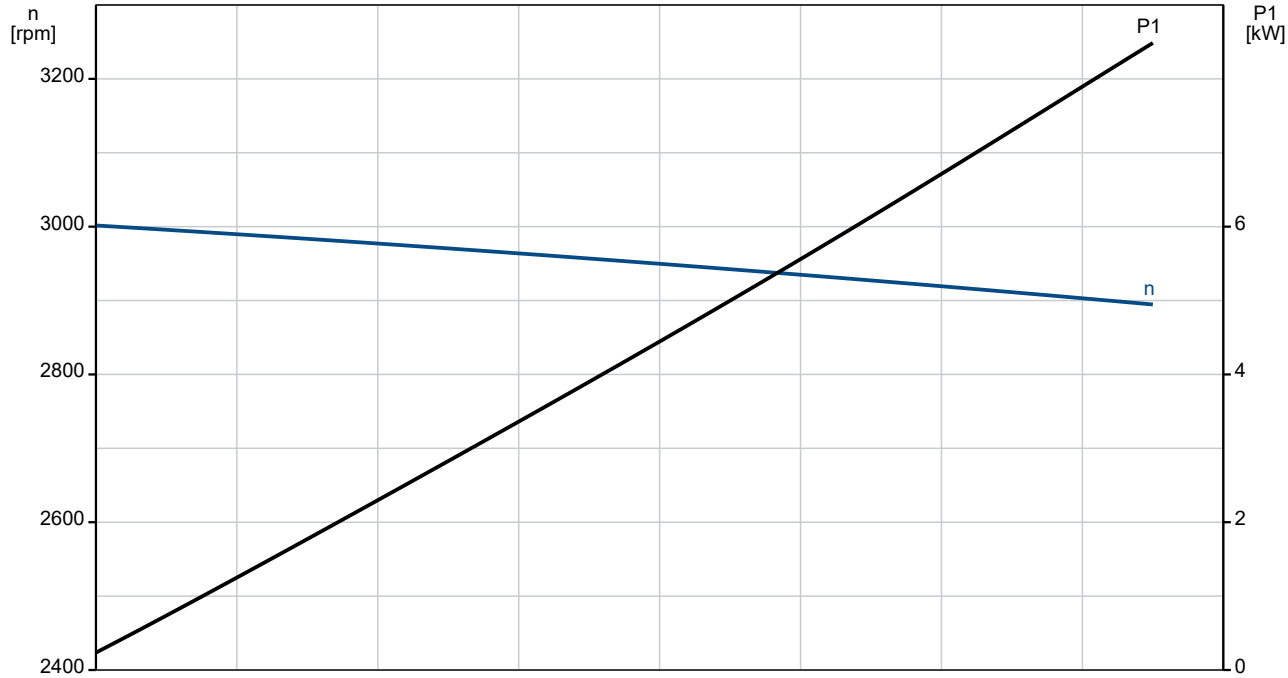

96123118 CRN 45-2-2 A-F-A-E-HQQE 50 Hz

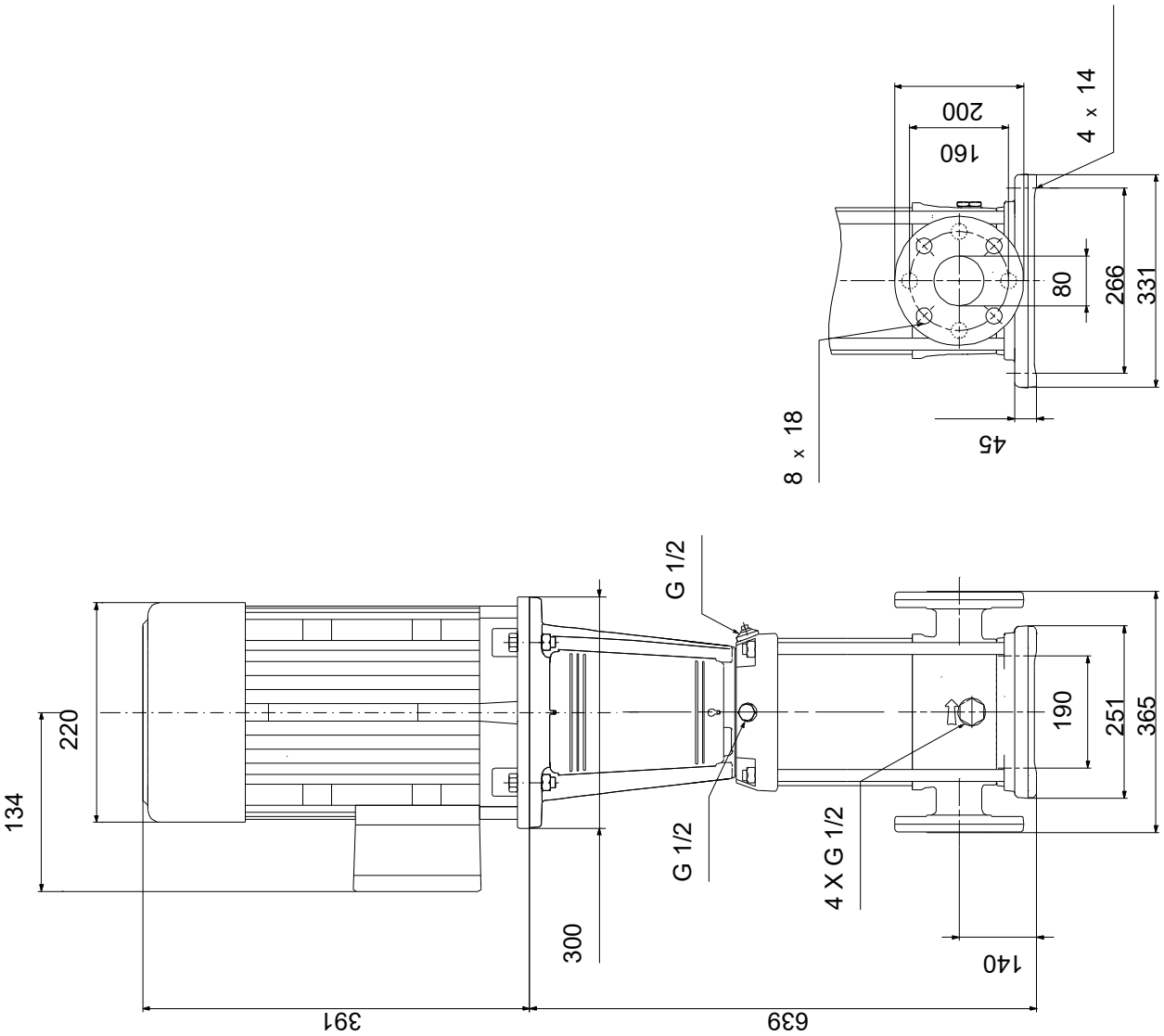

Note! All units are in [mm] unless others are stated.
Disclaimer: This simplified dimensional drawing does not show all details.

Spare parts CRN 45-2-2, Product No. 96123118
Produced After 1410 (production year and week number)

Pos	Omschrijving	Opmerking	Classificatie Gegevens	Onderdeelnr	Aanta	Eenhei
	Base			96587695	1	pcs
6	Base				1	
	Kit, chamber stack			96416241	1	pcs
80	Chamber stack				1	
3	Upper chamber cpl.					1
	Cone					
	Spare, turbulence optimizer KP					
	Spare, turbulence optimizer KP					
	Spare, turbulence optimizer KP					
	Spare, turbulence optimizer KP					
	Spare, turbulence optimizer KP					
47d	Lock ring					
47c	Bush					
4a	Intermediate chamber cpl.					1
	Cone					
	Spare, turbulence optimizer KP					
	Spare, turbulence optimizer KP					
	Spare, turbulence optimizer KP					
	Spare, turbulence optimizer KP					
	Spare, turbulence optimizer KP					
45a	Neck ring cpl.					
47	Bearing					
26c	Washer		Designation: DIN 125A			2
			Thickness: 1,6			
26b	Hex socket head cap screw					2
26a	Strap cpl.					2
44	Suction interconnector cpl.					1
44a	Suction interconnector					
45	Seal ring					
46	Neck ring					
65	Top f/neck ring					
47a	Bearing cpl.					1
	Driver					
	Holder					
	Disc spring					
	Bearing ring					
49d	Impeller cpl. reduced diameter					2
48	Nut					
49b	Split cone					
49a	Impeller, reduced diameter					
	Impeller hub					
49c	Wear ring					
51	Shaft					1
	Kit, chambers			98633888	1	pcs
4a	Intermediate chamber cpl.				1	
	Cone					1
	Spare, turbulence optimizer KP					1
	Spare, turbulence optimizer KP					1
	Spare, turbulence optimizer KP					1
	Spare, turbulence optimizer KP					1
	Spare, turbulence optimizer KP					10
45a	Neck ring cpl.					1
47	Bearing					1
47a	Bearing cpl.				1	
	Driver					1
	Holder					1
	Disc spring					1
	Bearing ring					1
	Kit, coupling			96416591	1	pcs

Pos	Omschrijving	Opmerking	Classificatie Gegevens	Onderdeelnr	Aanta	Eenhei
	Adjusting fork				1	
9	Hex socket head cap screw		Designation: DIN 912		4	
			Length (mm): 25			
			Thread: M10			
10a	Coupling		Type: SPACER		1	
	Kit, coupling guard			96505134	1	pcs
7a	Socket button head screw				4	
7	Coupling guard				2	
	Kit, cover			98832448	1	pcs
58a	Hex socket head cap screw		Designation: DIN 912		4	
			Length (mm): 25			
			Thread: M10			
58	Cover				1	
	Kit, gaskets			96416599	1	pcs
	Adjusting fork				1	
37	O-ring				2	
38	O-ring				2	
38	O-ring				4	
60	Spring				4	
109	O-ring				1	
110	O-ring		Diameter: 21,2		1	
			Material type: EPDM			
			Thickness: 3,55			
	Kit, Impeller, reduced			98634018	1	pcs
48	Nut				1	
48	Nut				1	
49b	Split cone				1	
49a	Impeller, reduced diameter				1	
	Impeller hub					1
49c	Wear ring					1
	Kit, plug			96505136	1	pcs
18	Air vent screw				1	
	Spindle					1
	Plug					1
25	Plug				4	
25	Plug				1	
38	O-ring				2	
38	O-ring				4	
38	O-ring		Diameter: 16,3		2	
			Material type: FKM			
			Thickness: 2,4			
38	O-ring		Diameter: 16,3		4	
			Material type: FKM			
			Thickness: 2,4			
38	O-ring		Diameter: 16,3		6	
			Material type: FKM			
			Thickness: 2,4			
	Kit, shaft seal HQQE			96525458	1	pcs
	Grinding device				1	
105	Shaft seal		Material type: HQQE		1	
	Adjusting fork					1
109	O-ring					1
110	O-ring		Diameter: 21,5			1
			Material type: EPDM			
			Thickness: 4,25			
	Kit, wear parts			98497473	1	pcs
45	Seal ring				2	
47d	Lock ring				2	
47c	Bush				1	
49c	Wear ring				2	
65	Top f/neck ring				2	
	Motor				1	pcs
	Kit, bearing cpl.			96279803	1	
111	Ball bearing		Designation: 6206.2Z.C3.SYN			1

Pos	Omschrijving	Opmerking	Classificatie Gegevens	Onderdeelnr	Aanta	Eenhei
153	Angular-contact bearing					1
157	O-ring		Diameter: 62			1
			Material type: NBR			
			Thickness: 3			
158	Waved washer					2
	Kit, end shield			96279790	1	
156 a	End shield					1
157	O-ring		Diameter: 62			1
			Material type: NBR			
			Thickness: 3			
158	Waved washer					1
159 a	Seal ring					1
	Kit, eyebolt			96279825	1	
189	Eyebolt					1
	Kit, fan			96279758	1	
156	Fan					1
159c	Seal ring					1
159 a	Seal ring					1
	Kit, fan cover			96279756	1	
151 b	Label					1
151	Fan cover					1
152	Pan head thread forming screw					4
	Kit, flange			96279784	1	
156 b	Flange					1
159. c	Seal ring					1
186	Drain plug					3
	Kit, retaining ring			96279801	1	
187	Retaining ring					1
188	Retaining ring					1
	Kit, shaft seal			96279764	1	
159 d	Seal ring					1
159c	Seal ring					1
	Kit, staybolts			96279793	1	
181	Pan head staybolt					4
	Kit, terminal board			96279769	1	
	Bracket cpl.					1
163	Hex socket head screw					1
173 a	Base					1
173	Pan head thread forming screw		Designation: COMBI TORX T25			1
176	Slot cheese head screw		Designation: COMBI TORX T25			6
			Length (mm): 10			
			Thread: M5			
176	Terminal					1
176	Connecting piece					3
176	Wire clamp					3
176	Terminal board					1
177	Pan head screw					1
	Kit, terminal box			96279772	1	
164	Terminal box cover w/gasket					1
166	Pan head thread forming screw					4
1a	Motor stool			96547431	1	pcs
2	Pump head			96587726	1	pcs
3	Upper chamber cpl.			98634048	1	pcs
47c	Bush			99321194	1	

Pos	Omschrijving	Opmerking	Classificatie Gegevens	Onderdeelnr	Aanta	Eenhei
4a	Intermediate chamber cpl.			99262907	1	pcs
45a	Neck ring cpl.			96547392	1	
47	Bearing			99964632	1	
47	Bearing			99928986	1	
6	Base			99347238	1	pcs
7a	Socket button head screw			96549696	4	pcs
7	Coupling guard			96603300	2	pcs
8	Coupling cpl.		Dimension: 22/38	96587705	1	pcs
9	Hex socket head cap screw		Designation: DIN 912	99789390	4	pcs
			Length (mm): 25			
			Thread: M10			
18	Air vent screw			96547461	1	pcs
18	Air vent screw			95061351	1	pcs
25	Plug			96536013	1	pcs
26c	Washer		Designation: DIN 125A	99262704	2	pcs
			Thickness: 1,6			
26c	Washer		Designation: DIN 125A	99886930	2	pcs
			Thickness: 1,6			
26b	Hex socket head cap screw			98931380	2	pcs
26a	Strap cpl.			98893157	2	pcs
26	Staybolt		Length (mm): 390	98976718	4	pcs
			Thread: M16			
28	Hex socket head cap screw		Designation: DIN 912	96536147	4	pcs
			Length (mm): 50			
			Thread: M10			
28	Hex head screw			99867140	2	pcs
28	Hex head screw		Length (mm): 45 MM	96620474	2	pcs
			Thread: M12			
32	Washer		Designation: DIN 125 A	99883474	8	pcs
			Internal diameter: 13			
			Outer diameter: 24			
			Thickness: 2,5			
32	Washer		Designation: DIN 125 A2	99944260	4	pcs
			Internal diameter: 17			
			Outer diameter: 30			
			Thickness: 3			
36	Nut		Thread: M16	99944257	4	pcs
36	Nut		Thread: M12	96620479	4	pcs
37	O-ring			96536142	1	pcs
38	O-ring			99198815	2	pcs
38	O-ring			99412727	2	pcs
44	Suction interconnector cpl.			98634055	1	pcs
45	Seal ring			97911448	1	
45	Seal ring			96535952	1	
65	Top f/neck ring			96547390	1	
47a	Bearing cpl.			99270649	1	pcs
47a	Bearing cpl.			96535951	1	pcs
48	Nut			99262680	1	pcs
48	Nut			99262683	1	pcs
48	Nut			96536016	1	pcs
49b	Split cone			96536010	1	pcs
49a	Impeller, reduced diameter			96535957	1	pcs
49c	Wear ring			96535949	1	
49a	Impeller, reduced diameter			98585277	1	pcs
51	Shaft			98506305	1	pcs
55	Outer sleeve		Outer diameter: 216	98820350	1	pcs
			Length (mm): 183,5			
58	Cover			98893158	1	pcs
60	Spring			96536032	4	pcs
105	Shaft seal		Material type: HQQE	96984086	1	pcs
	Adjusting fork			96587896	1	
109	O-ring			99651108	1	
109	O-ring			96547586	1	
105	Shaft seal		Material type: HQQE	96984070	1	pcs

Pos	Omschrijving	Opmerking	Classificatie Gegevens	Onderdeelnr	Aanta	Eenhei
440 b	Lock ring			96535943	1	pcs