Inventflow: Grundfos A-partner

Grundfos CRN 45-3 A-F-A-E-HQQE

Find the pump here:
https://inventflow.nl/en/pompenfilter/crn/grundfos-crn-45-3-a-f-a-e-hqqe

Contact

info@inventflow.nl
+31 (0) 546 45 80 72

Datasheet

Qty.	Description
1	**CRN 45-3 A-F-A-E-HQQE**

Product No.: 96123121
Vertical, non-self-priming, multistage, in-line, centrifugal pump for installation in pipe systems and mounting on a foundation.

The pump has the following characteristics:
- Impellers, intermediate chambers and outer sleeve are made of

Impeller: Stainless steel, EN 1.4401.
- Pump head cover and base are made of

Pump housing: Stainless steel, EN 1.4408.
- The shaft seal has assembly length according to EN 12756.
- Power transmission is via cast iron split coupling.

Flange standard: - Pipework connection is via DIN flanges/couplings.

Phase: The motor is a 3-phase AC motor.

Controls:
Frequency converter: NONE

Liquid:
Pumped liquid: Water
Liquid temperature range: -40 .. 120 °C
Selected liquid temperature: 20 °C
Density: 998.2 kg/m³

Technical:
Pump speed on which pump data are based: 2924 rpm
Rated flow: 45 m³/h
Rated head: 59.4 m
Pump orientation: Vertical
Shaft seal arrangement: Single
Code for shaft seal: HQQE
Approvals on nameplate: CE,EAC,UKCA,WRAS,ACS
Curve tolerance: ISO9906:2012 3B

Materials:
Base: Stainless steel
EN 1.4408
AISI 316
Impeller: Stainless steel
EN 1.4401
AISI 316
Bearing: SIC
Support bearing: Graflon

Installation:
Maximum ambient temperature: 60 °C
Maximum operating pressure: 16 bar
Max pressure at stated temp: 16 bar / 120 °C
16 bar / -40 °C

Qty.	Description	
	Type of connection:	DIN
	Size of inlet connection:	DN 80
	Size of outlet connection:	DN 80
	Pressure rating for connection:	PN 40
	Flange size for motor:	FF300
	Electrical data:	
	Motor standard:	IEC
	Motor type:	160MB
	IE Efficiency class:	IE3
	Rated power - P2:	11 kW
	Power (P2) required by pump:	11 kW
	Mains frequency:	50 Hz
	Rated voltage:	3 x 380-415D/660-690Y V
	Rated current:	20,8-19,8/12,0-11,8 A
	Starting current:	660-780 %
	Cos phi - power factor:	0.88-0.84
	Rated speed:	2940-2950 rpm
	Efficiency:	IE3 91,2%
	Motor efficiency at full load:	91.2-91.2 %
	Motor efficiency at 3/4 load:	91.8 %
	Motor efficiency at 1/2 load:	91.3 %
	Number of poles:	2
	Enclosure class (IEC 34-5):	55 Dust/Jetting
	Insulation class (IEC 85):	F
	Motor No:	85U17524
	Others:	
	Minimum efficiency index, MEI ≥:	0.70
	Net weight:	164 kg
	Gross weight:	197 kg
	Shipping volume:	0.495 m³
	Danish VVS No.:	385917030
	Country of origin:	DK
	Custom tariff no.:	84137075

96123121 CRN 45-3 A-F-A-E-HQQE 50 Hz

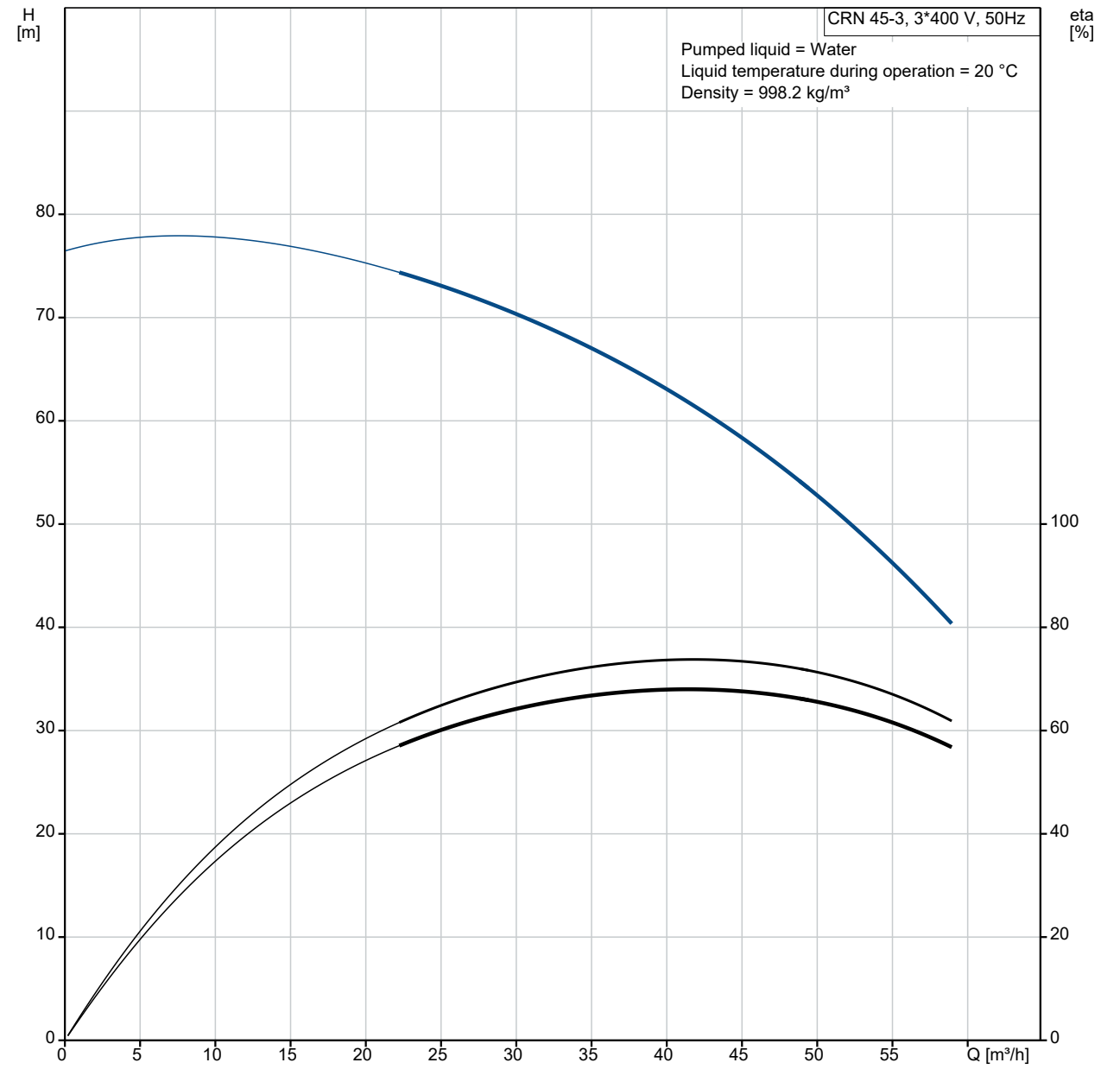

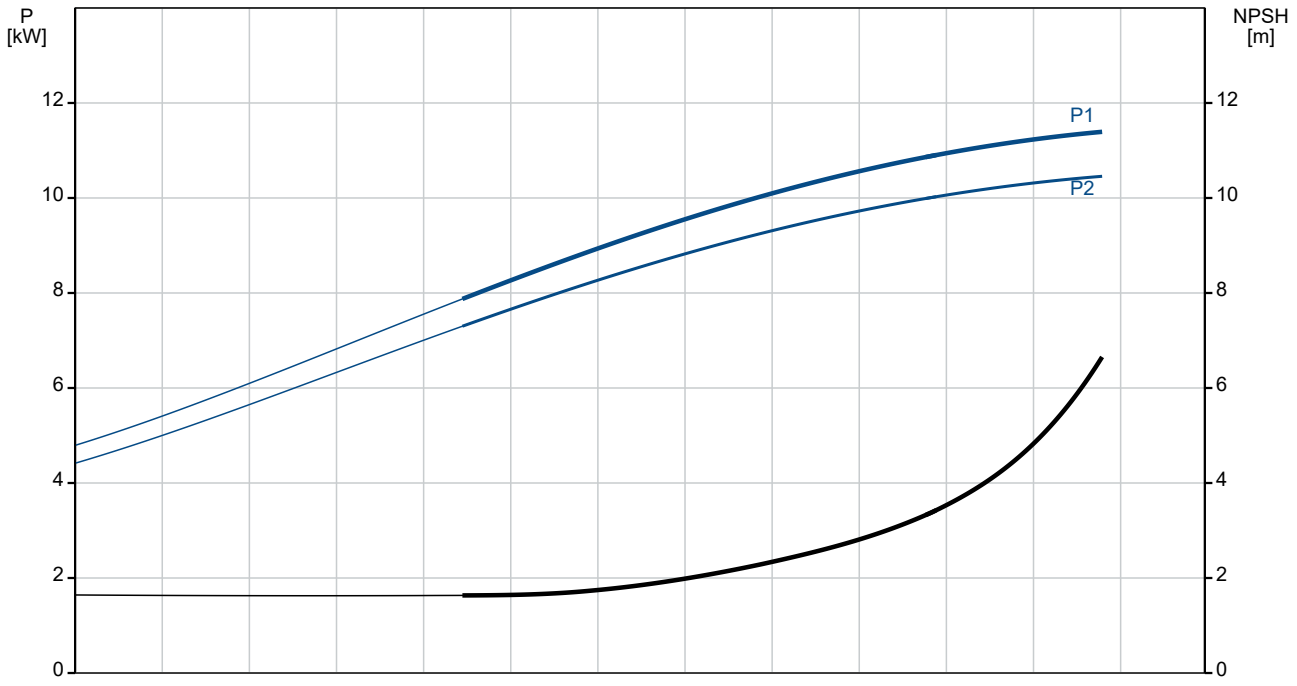

Description	Value
General information:	
Product name:	CRN 45-3 A-F-A-E-HQQE
Product No:	96123121
EAN number:	5700396691664
Technical:	
Pump speed on which pump data are based:	2924 rpm
Rated flow:	45 m³/h
Rated head:	59.4 m
Maximum head:	77.1 m
Stages:	3
Impellers:	3
Number of reduced-diameter impellers:	0
Low NPSH:	N
Pump orientation:	Vertical
Shaft seal arrangement:	Single
Code for shaft seal:	HQQE
Approvals on nameplate:	CE,EAC,UKCA,WRAS,ACS
Curve tolerance:	ISO9906:2012 3B
Pump version:	A
Model:	B
Materials:	
Base:	Stainless steel
Base:	EN 1.4408
Base:	AISI 316
Impeller:	Stainless steel
Impeller:	EN 1.4401
Impeller:	AISI 316
Material code:	A
Code for rubber:	E
Bearing:	SIC
Support bearing:	Graflon
Installation:	
Maximum ambient temperature:	60 °C
Maximum operating pressure:	16 bar
Max pressure at stated temp:	16 bar / 120 °C
Max pressure at stated temp:	16 bar / -40 °C
Type of connection:	DIN
Size of inlet connection:	DN 80
Size of outlet connection:	DN 80
Pressure rating for connection:	PN 40
Flange size for motor:	FF300
Connect code:	F
Liquid:	
Pumped liquid:	Water
Liquid temperature range:	-40 .. 120 °C
Selected liquid temperature:	20 °C
Density:	998.2 kg/m³
Electrical data:	
Motor standard:	IEC
Motor type:	160MB
IE Efficiency class:	IE3
Rated power - P2:	11 kW
Power (P2) required by pump:	11 kW
Mains frequency:	50 Hz
Rated voltage:	3 x 380-415D/660-690Y V
Rated current:	20,8-19,8/12,0-11,8 A
Starting current:	660-780 %
Cos phi - power factor:	0.88-0.84
Rated speed:	2940-2950 rpm
Efficiency:	IE3 91,2%
Motor efficiency at full load:	91.2-91.2 %

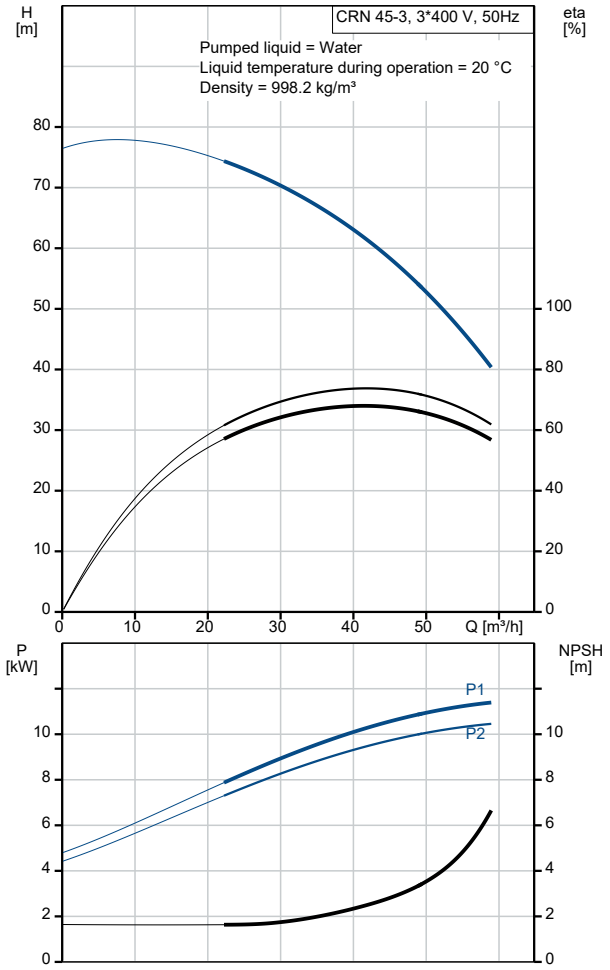

Description	Value
Motor efficiency at 3/4 load:	91.8 %
Motor efficiency at 1/2 load:	91.3 %
Number of poles:	2
Enclosure class (IEC 34-5):	55 Dust/Jetting
Insulation class (IEC 85):	F
Motor protec:	PTC
Motor No:	85U17524
Controls:	
Frequency converter:	NONE
Others:	
Minimum efficiency index, MEI ≥:	0.70
Net weight:	164 kg
Gross weight:	197 kg
Shipping volume:	0.495 m³
Danish VVS No.:	385917030
Country of origin:	DK
Custom tariff no.:	84137075

96123121 CRN 45-3 A-F-A-E-HQQE 50 Hz

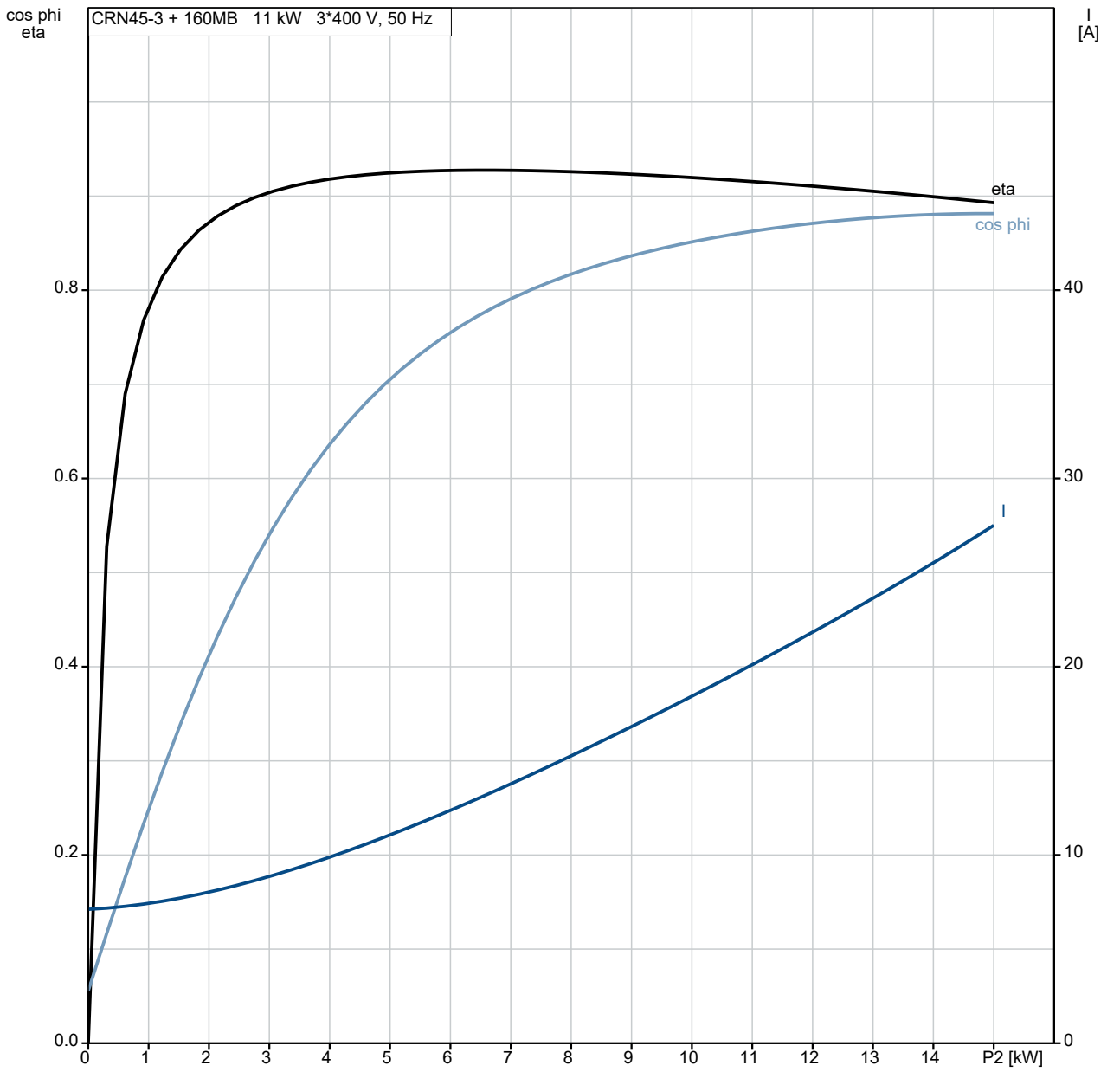

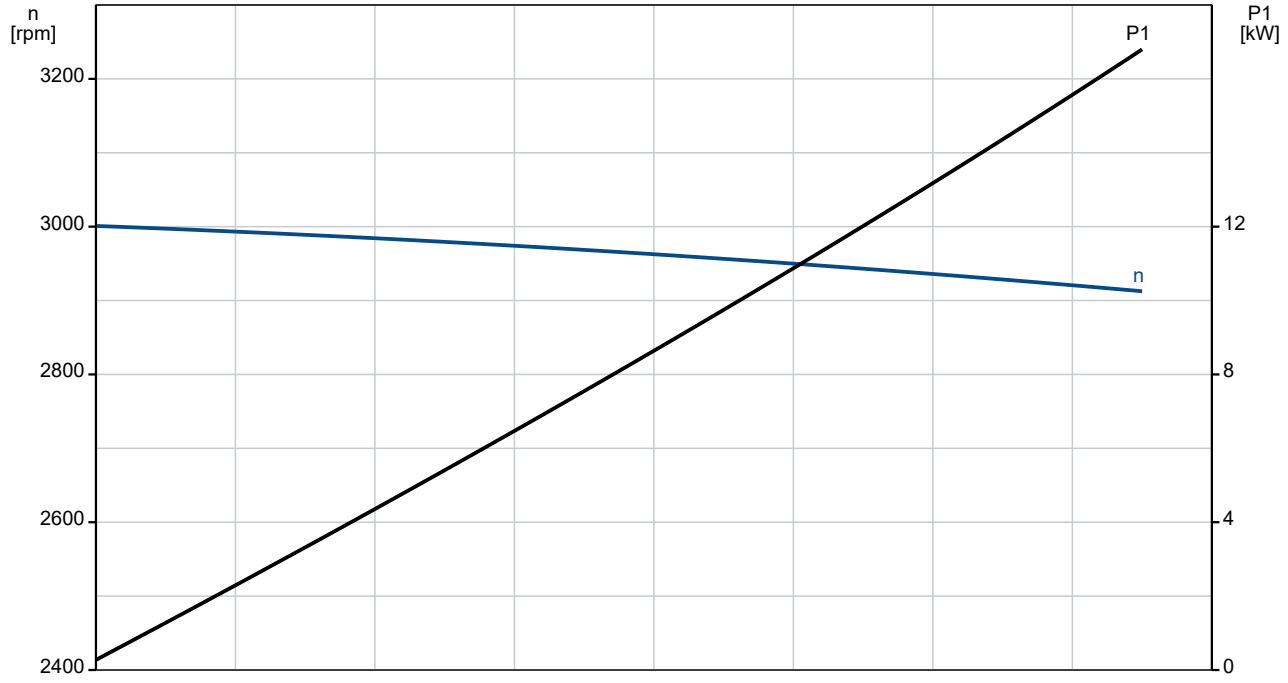

96123121 CRN 45-3 A-F-A-E-HQQE 50 Hz

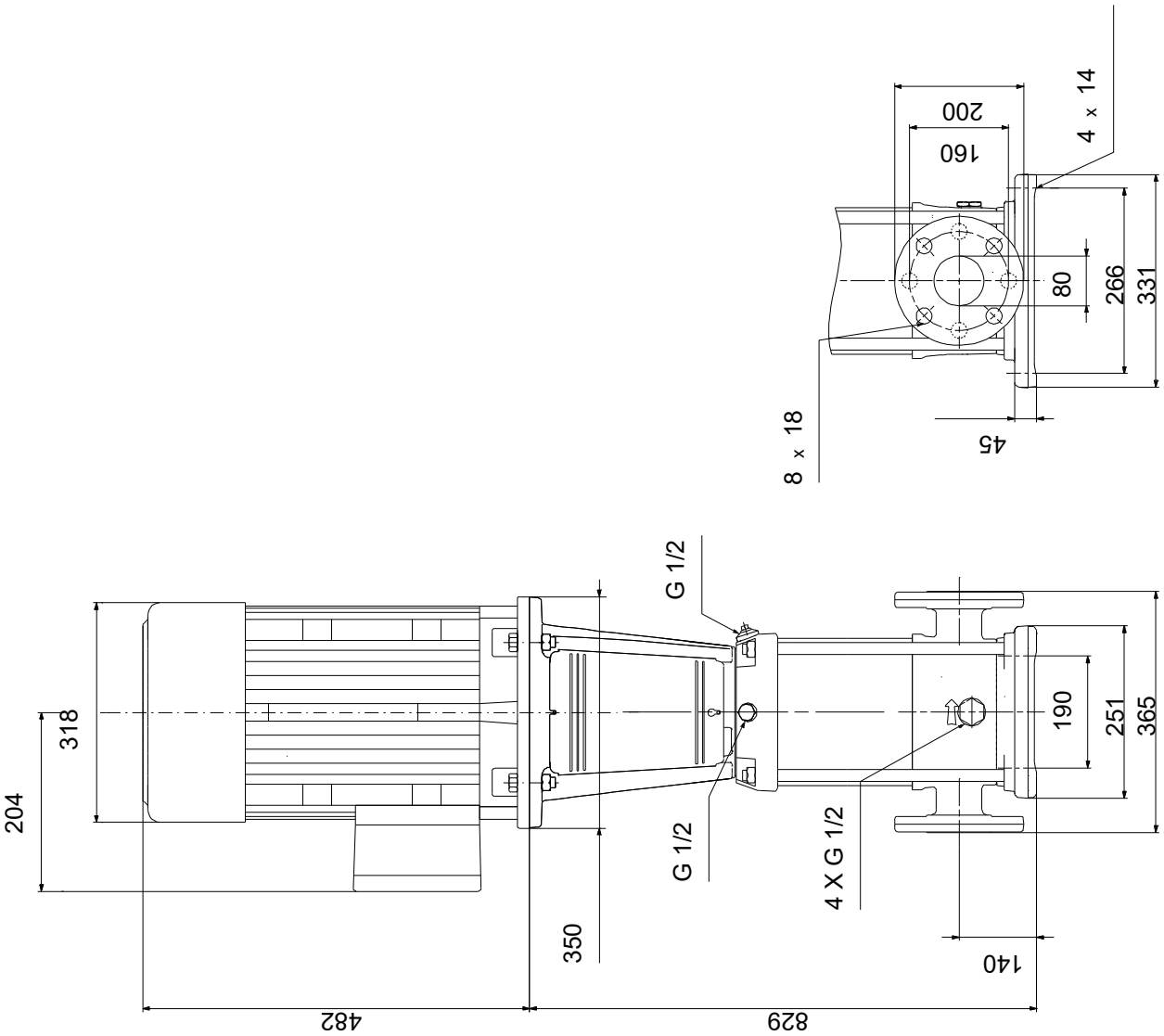

Note! All units are in [mm] unless others are stated.
Disclaimer: This simplified dimensional drawing does not show all details.

Spare parts CRN 45-3, Product No. 96123121
Produced After 1410 (production year and week number)

	Pos	Omschrijving	Opmerking tekst	Classificatie Gegevens	Onderdeelnr.	Aantal	Eenheid
-		Base			96587695	1	pcs
	6	Base				1	
-		Kit, chamber stack			96416245	1	pcs
-	80	Chamber stack				1	
-	3	Upper chamber cpl.					1
		Cone					
		Spare, turbulence optimizer KP					
		Spare, turbulence optimizer KP					
		Spare, turbulence optimizer KP					
		Spare, turbulence optimizer KP					
		Spare, turbulence optimizer KP					
	47d	Lock ring					
	47c	Bush					
-	4a	Intermediate chamber cpl.					1
		Cone					
		Spare, turbulence optimizer KP					
		Spare, turbulence optimizer KP					
		Spare, turbulence optimizer KP					
		Spare, turbulence optimizer KP					
		Spare, turbulence optimizer KP					
	45a	Neck ring cpl.					
	47	Bearing					
-	4	Intermediate chamber cpl.					1
		Cone					
		Spare, turbulence optimizer KP					
		Spare, turbulence optimizer KP					
		Spare, turbulence optimizer KP					
		Spare, turbulence optimizer KP					
		Spare, turbulence optimizer KP					
	45a	Neck ring cpl.					
	47d	Lock ring					
	47c	Bush					
	26c	Washer		Designation: DIN 125A			2
				Thickness: 1,6			
	26b	Hex socket head cap screw					2
	26a	Strap cpl.		Length (mm): 249			2
				Thread: M8			
-	44	Suction interconnector cpl.					1
	44a	Suction interconnector					
	45	Seal ring					
	46	Neck ring					
	65	Top f/neck ring					
-	47a	Bearing cpl.					1
		Driver					
		Holder					
		Disc spring					
		Bearing ring					
-	49e	Impeller cpl.					3
	48	Nut					
	49b	Split cone					
-	49a	Impeller, reduced diameter					
		Impeller hub					
	49c	Wear ring					
	51	Shaft					1
-		Kit, chambers			98633888	1	pcs
-	4a	Intermediate chamber cpl.				1	
		Cone					1
		Spare, turbulence optimizer KP					1
		Spare, turbulence optimizer KP					1

	Pos	Omschrijving	Opmerking tekst	Classificatie Gegevens	Onderdeelnr.	Aantal	Eenheid
		Spare, turbulence optimizer KP					1
		Spare, turbulence optimizer KP					1
		Spare, turbulence optimizer KP					10
	45a	Neck ring cpl.					1
	47	Bearing					1
-	47a	Bearing cpl.				1	
		Driver					1
		Holder					1
		Disc spring					1
		Bearing ring					1
-		Kit, coupling			96416592	1	pcs
		Adjusting fork				1	
-	8	Coupling cpl.		Dimension: 22/42		1	
	9	Hex socket head cap screw		Designation: DIN 912			4
				Length (mm): 25			
				Thread: M10			
	10a	Coupling half					2
-		Kit, coupling guard			96505135	1	pcs
	7a	Socket button head screw				4	
	7	Coupling guard				2	
-		Kit, cover			98832448	1	pcs
	58a	Hex socket head cap screw		Designation: DIN 912		4	
				Length (mm): 25			
				Thread: M10			
	58	Cover				1	
-		Kit, gaskets			96416599	1	pcs
		Adjusting fork				1	
	37	O-ring				2	
	38	O-ring				2	
	38	O-ring				4	
	60	Spring				4	
	109	O-ring				1	
	110	O-ring		Diameter: 21,2		1	
				Material type: EPDM			
				Thickness: 3,55			
-		Kit, impeller			98634001	1	pcs
	48	Nut				1	
	48	Nut				1	
	49b	Split cone				1	
	49	Impeller				1	
-		Kit, plug			96505136	1	pcs
-	18	Air vent screw				1	
		Spindle					1
		Plug					1
	25	Plug				4	
	25	Plug				1	
	38	O-ring				2	
	38	O-ring				4	
	38	O-ring		Diameter: 16,3		2	
				Material type: FKM			
				Thickness: 2,4			
	38	O-ring		Diameter: 16,3		4	
				Material type: FKM			
				Thickness: 2,4			
	38	O-ring		Diameter: 16,3		6	
				Material type: FKM			
				Thickness: 2,4			
-		Kit, shaft seal HQQE			96525458	1	pcs
		Grinding device				1	
-	105	Shaft seal		Material type: HQQE		1	
		Adjusting fork					1
	109	O-ring					1
	110	O-ring		Diameter: 21,5			1
				Material type: EPDM			

Pos	Omschrijving	Opmerking tekst	Classificatie Gegevens	Onderdeelnr.	Aantal	Eenheid
			Thickness: 4,25			
-	Kit, wear parts			98497474	1	pcs
45	Seal ring				7	
47d	Lock ring				7	
47c	Bush				5	
49c	Wear ring				7	
65	Top f/neck ring				7	
-	Motor				1	pcs
-	Kit, bearing cpl.			96796676	1	
32b	Waved washer					2
153	Angular-contact bearing					1
154	Ball bearing					1
157	O-ring					1
159	V-ring					1
-	Kit, bearing plate			96796664	1	
155.a	Bearing cover					1
208a	Gasket					3
208	Hex socket head cap screw		Designation: DIN912			3
			Length (mm): 40			
			Thread: M5			
-	Kit, eyebolt			96796712	1	
189	Eyebolt					2
-	Kit, fan			96796654	1	
156.c	Retaining ring					1
156	Fan					1
-	Kit, fan cover			96796647	1	
151	Fan cover					1
152.a	Rubber bush					4
152	Hex head cap screw					4
196	Diaphragm					1
-	Kit, flange			96796662	1	
156.b	Flange					1
159.b	Seal ring					1
185.b	Nut					4
185	Hex socket head cap screw					4
186	Drain plug					4
195.a	Grease nipple					1
-	Kit, gaskets			96798508	1	
184	O-ring		Diameter: 235			2
-	Kit, lubrication nipple			96796671	1	
195.b	Grease nipple					2
195.a	Grease nipple					1
-	Kit, ND-end shield cpl.			96796669	1	
32b	Waved washer					1
156.a	End shield NDE					1
157	O-ring					1
159	V-ring					1
185.c	Nut					4
185.a	Hex socket head cap screw					4
195.b	Grease nipple					1
-	Kit, shaft seal			96843459	1	
159.b	V-ring					1
159	V-ring					1

	Pos	Omschrijving	Opmerking tekst	Classificatie Gegevens	Onderdeelnr.	Aantal	Eenheid
-		Kit, terminal board			96796657	1	
		Terminal connection					3
		Washer					12
	36	Hex nut					12
	173	Torx Screw					1
	176.d	Terminal board					1
	176	Terminal board					1
	177	Torx Screw					1
-		Kit, terminal box cover			96796659	1	
	164	Terminal box cover					1
	273a	Pan head thread forming screw					4
	1a	Motor stool			98993921	1	pcs
	2	Pump head			96587726	1	pcs
-	3	Upper chamber cpl.			98634048	1	pcs
	47c	Bush			99321194	1	
-	4	Intermediate chamber cpl.			99335210	1	pcs
	45a	Neck ring cpl.			96547392	1	
-	4a	Intermediate chamber cpl.			99262907	1	pcs
	47	Bearing			99964632	1	
	47	Bearing			99928986	1	
+	4	Intermediate chamber cpl.			98634020	1	pcs
	6	Base			99347238	1	pcs
	7a	Socket button head screw			96549696	4	pcs
	7	Coupling guard			96603279	2	pcs
	9	Hex socket head cap screw		Designation: DIN 912	99789390	4	pcs
				Length (mm): 25			
				Thread: M10			
+	18	Air vent screw			96547461	1	pcs
+	18	Air vent screw			95061351	1	pcs
	25	Plug			96536013	1	pcs
	26c	Washer		Designation: DIN 125A	99262704	2	pcs
				Thickness: 1,6			
	26c	Washer		Designation: DIN 125A	99886930	2	pcs
				Thickness: 1,6			
	26b	Hex socket head cap screw			98931380	2	pcs
	26a	Strap cpl.		Length (mm): 249	99627208	2	pcs
				Thread: M8			
	26a	Strap cpl.		Length (mm): 249	98983878	2	pcs
				Thread: M8			
	26	Staybolt		Length (mm): 470	98976719	4	pcs
				Thread: M16			
	28.a	Hex head screw			96620478	4	pcs
	28	Hex socket head cap screw		Designation: DIN 912	96536147	4	pcs
				Length (mm): 50			
				Thread: M10			
	32	Washer		Designation: DIN 125 A2	99944260	4	pcs
				Internal diameter: 17			
				Outer diameter: 30			
				Thickness: 3			
	32	Washer		Designation: DIN 125 A	98923051	8	pcs
				Internal diameter: 17			
				Outer diameter: 30			
				Thickness: 3			
	36	Nut		Thread: M16	99944257	4	pcs
	36	Hex nut		Thread: M16	96620480	4	pcs
	37	O-ring			96536142	1	pcs
	38	O-ring			99198815	2	pcs
	38	O-ring			99412727	2	pcs
-	44	Suction interconnector cpl.			98634055	1	pcs
	45	Seal ring			97911448	1	
	45	Seal ring			96535952	1	
	65	Top f/neck ring			96547390	1	
+	47a	Bearing cpl.			99270649	1	pcs

	Pos	Omschrijving	Opmerking tekst	Classificatie Gegevens	Onderdeelnr.	Aantal	Eenheid
+	47a	Bearing cpl.			96535951	1	pcs
	48	Nut			99262680	1	pcs
	48	Nut			99262683	1	pcs
	48	Nut			96536016	1	pcs
	49b	Split cone			96536010	1	pcs
-	49a	Impeller, reduced diameter			96535957	1	pcs
	49c	Wear ring			96535949	1	
+	49a	Impeller, reduced diameter			98585277	1	pcs
	51	Shaft			98506307	1	pcs
	55	Outer sleeve		Outer diameter: 216	98820351	1	pcs
				Length (mm): 263,5			
	58	Cover			98893158	1	pcs
	60	Spring			96536032	4	pcs
-	105	Shaft seal		Material type: HQQE	96984086	1	pcs
		Adjusting fork			96587896	1	
	109	O-ring			99651108	1	
	109	O-ring			96547586	1	
+	105	Shaft seal		Material type: HQQE	96984070	1	pcs
	440b	Lock ring			96535943	1	pcs