# Inventflow: Grundfos A-partner

## Grundfos CR 64-3-2 A-F-A-E-HQQE

Find the pump here:
https://inventflow.nl/en/pompenfilter/cr/grundfos-cr-64-3-2-a-f-a-e-hqqe

### Contact

info@inventflow.nl
+31 (0) 546 45 80 72

### Datasheet

| Qty. | Description |
|---|---|
| 1 | **CR 64-3-2 A-F-A-E-HQQE** |

**Note! Product picture may differ from actual product**

Product No.: 96123531
Vertical, non-self-priming, multistage, in-line, centrifugal pump for installation in pipe systems and mounting on a foundation.

The pump has the following characteristics:
- Impellers and intermediate chambers are made of

Impeller: Stainless steel, EN 1.4301.
Pump housing: - Pump head and base are made of Cast iron.
- The shaft seal has assembly length according to EN 12756.
- Power transmission is via cast iron split coupling.

Flange standard: - Pipework connection is via DIN flanges.

Phase: The motor is a 3-phase AC motor.

Controls:
Frequency converter: NONE

Liquid:
Pumped liquid: Water
Liquid temperature range: -30 .. 120 °C
Selected liquid temperature: 20 °C
Density: 998.2 kg/m³

Technical:
Pump speed on which pump data are based: 2923 rpm
Rated flow: 64 m³/h
Rated head: 52.8 m
Pump orientation: Vertical
Shaft seal arrangement: Single
Code for shaft seal: HQQE
Approvals on nameplate: CE,EAC,UKCA,WRAS,ACS
Curve tolerance: ISO9906:2012 3B

Materials:
Base: Cast iron
EN 1563 EN-GJS-500-7
ASTM A536 80-55-06
Impeller: Stainless steel
EN 1.4301
AISI 304
Bearing: SIC
Support bearing: Graflon

| Qty. | Description |
|---|---|

Installation:

| | |
|---|---|
| Maximum ambient temperature: | 60 °C |
| Maximum operating pressure: | 16 bar |
| Max pressure at stated temp: | 16 bar / 120 °C |
| | 16 bar / -30 °C |
| Type of connection: | DIN |
| Size of inlet connection: | DN 100 |
| Size of outlet connection: | DN 100 |
| Pressure rating for connection: | PN 16 |
| Flange size for motor: | FF300 |

Electrical data:

| | |
|---|---|
| Motor standard: | IEC |
| Motor type: | 160MD |
| IE Efficiency class: | IE3 |
| Rated power - P2: | 15 kW |
| Power (P2) required by pump: | 15 kW |
| Mains frequency: | 50 Hz |
| Rated voltage: | 3 x 380-415D/660-690Y V |
| Rated current: | 28,0-26,0/16,2-15,6 A |
| Starting current: | 660-780 % |
| Cos phi - power factor: | 0.89-0.87 |
| Rated speed: | 2930-2950 rpm |
| Efficiency: | IE3 91,9% |
| Motor efficiency at full load: | 91.9-91.9 % |
| Motor efficiency at 3/4 load: | 92.4 % |
| Motor efficiency at 1/2 load: | 92.4 % |
| Number of poles: | 2 |
| Enclosure class (IEC 34-5): | 55 Dust/Jetting |
| Insulation class (IEC 85): | F |
| Motor No: | 85U17526 |

Others:

| | |
|---|---|
| Minimum efficiency index, MEI ≥: | 0.70 |
| Net weight: | 179 kg |
| Gross weight: | 212 kg |
| Shipping volume: | 0.495 m³ |
| Danish VVS No.: | 385908032 |
| Finnish LVI No.: | 4925515 |
| Country of origin: | DK |
| Custom tariff no.: | 84137075 |

# 96123531 CR 64-3-2 A-F-A-E-HQQE 50 Hz

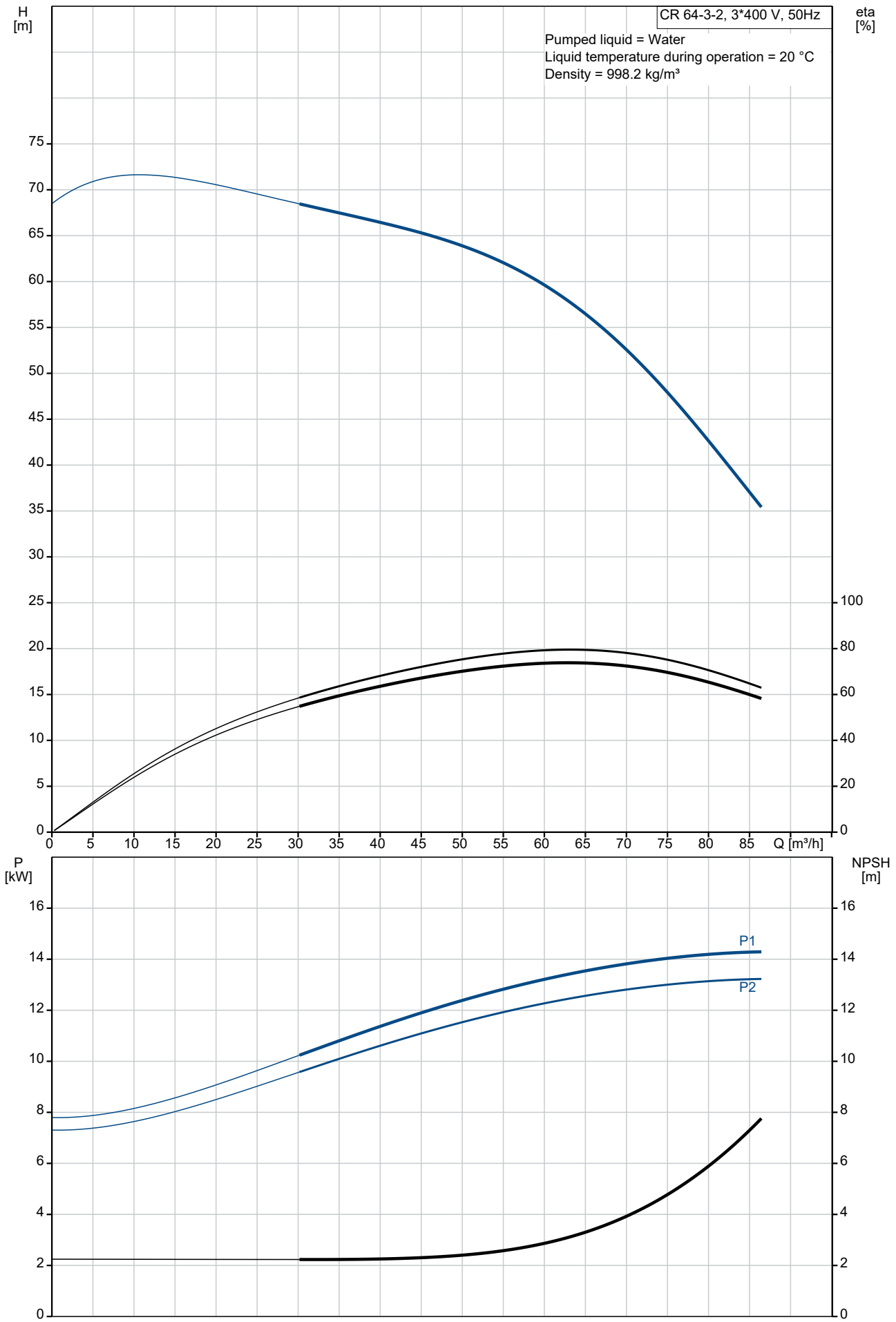

| Description | Value |
|---|---|
| **General information:** | |
| Product name: | CR 64-3-2 A-F-A-E-HQQE |
| Product No: | 96123531 |
| EAN number: | 5700396697413 |
| **Technical:** | |
| Pump speed on which pump data are based: | 2923 rpm |
| Rated flow: | 64 m³/h |
| Rated head: | 52.8 m |
| Maximum head: | 70.1 m |
| Stages: | 3 |
| Impellers: | 3 |
| Number of reduced-diameter impellers: | 2 |
| Low NPSH: | N |
| Pump orientation: | Vertical |
| Shaft seal arrangement: | Single |
| Code for shaft seal: | HQQE |
| Approvals on nameplate: | CE,EAC,UKCA,WRAS,ACS |
| Curve tolerance: | ISO9906:2012 3B |
| Pump version: | A |
| Model: | B |
| **Materials:** | |
| Base: | Cast iron |
| Base: | EN 1563 EN-GJS-500-7 |
| Base: | ASTM A536 80-55-06 |
| Impeller: | Stainless steel |
| Impeller: | EN 1.4301 |
| Impeller: | AISI 304 |
| Material code: | A |
| Code for rubber: | E |
| Bearing: | SIC |
| Support bearing: | Graflon |
| **Installation:** | |
| Maximum ambient temperature: | 60 °C |
| Maximum operating pressure: | 16 bar |
| Max pressure at stated temp: | 16 bar / 120 °C |
| Max pressure at stated temp: | 16 bar / -30 °C |
| Type of connection: | DIN |
| Size of inlet connection: | DN 100 |
| Size of outlet connection: | DN 100 |
| Pressure rating for connection: | PN 16 |
| Flange size for motor: | FF300 |
| Connect code: | F |
| **Liquid:** | |
| Pumped liquid: | Water |
| Liquid temperature range: | -30 .. 120 °C |
| Selected liquid temperature: | 20 °C |
| Density: | 998.2 kg/m³ |
| **Electrical data:** | |
| Motor standard: | IEC |
| Motor type: | 160MD |
| IE Efficiency class: | IE3 |
| Rated power - P2: | 15 kW |
| Power (P2) required by pump: | 15 kW |
| Mains frequency: | 50 Hz |
| Rated voltage: | 3 x 380-415D/660-690Y V |
| Rated current: | 28,0-26,0/16,2-15,6 A |
| Starting current: | 660-780 % |
| Cos phi - power factor: | 0.89-0.87 |
| Rated speed: | 2930-2950 rpm |
| Efficiency: | IE3 91,9% |
| Motor efficiency at full load: | 91.9-91.9 % |

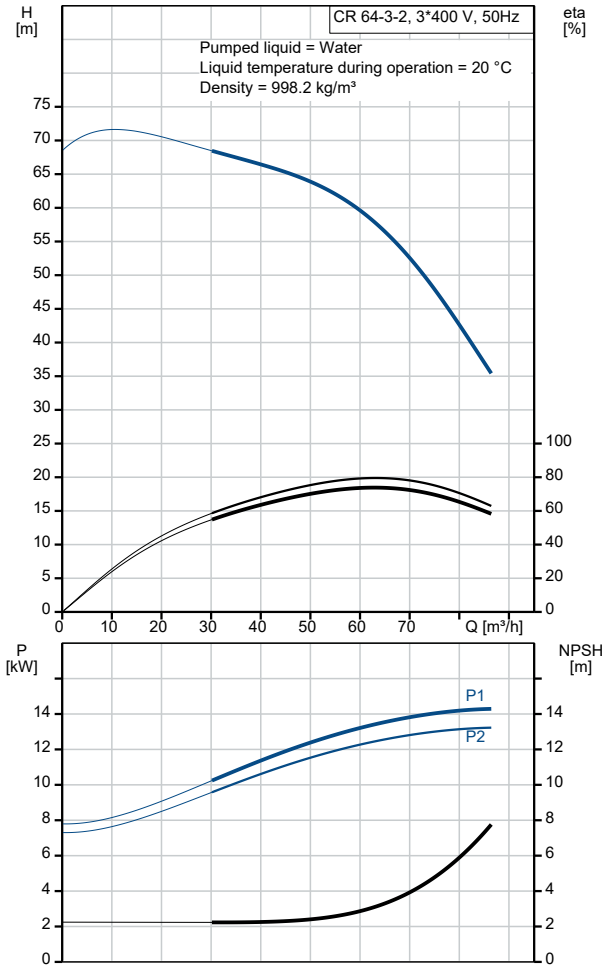

| Description | Value |
|---|---|
| Motor efficiency at 3/4 load: | 92.4 % |
| Motor efficiency at 1/2 load: | 92.4 % |
| Number of poles: | 2 |
| Enclosure class (IEC 34-5): | 55  Dust/Jetting |
| Insulation class (IEC 85): | F |
| Motor protec: | PTC |
| Motor No: | 85U17526 |
| **Controls:** | |
| Frequency converter: | NONE |
| **Others:** | |
| Minimum efficiency index, MEI ≥: | 0.70 |
| Net weight: | 179 kg |
| Gross weight: | 212 kg |
| Shipping volume: | 0.495 m³ |
| Danish VVS No.: | 385908032 |
| Finnish LVI No.: | 4925515 |
| Country of origin: | DK |
| Custom tariff no.: | 84137075 |

# 96123531 CR 64-3-2 A-F-A-E-HQQE 50 Hz

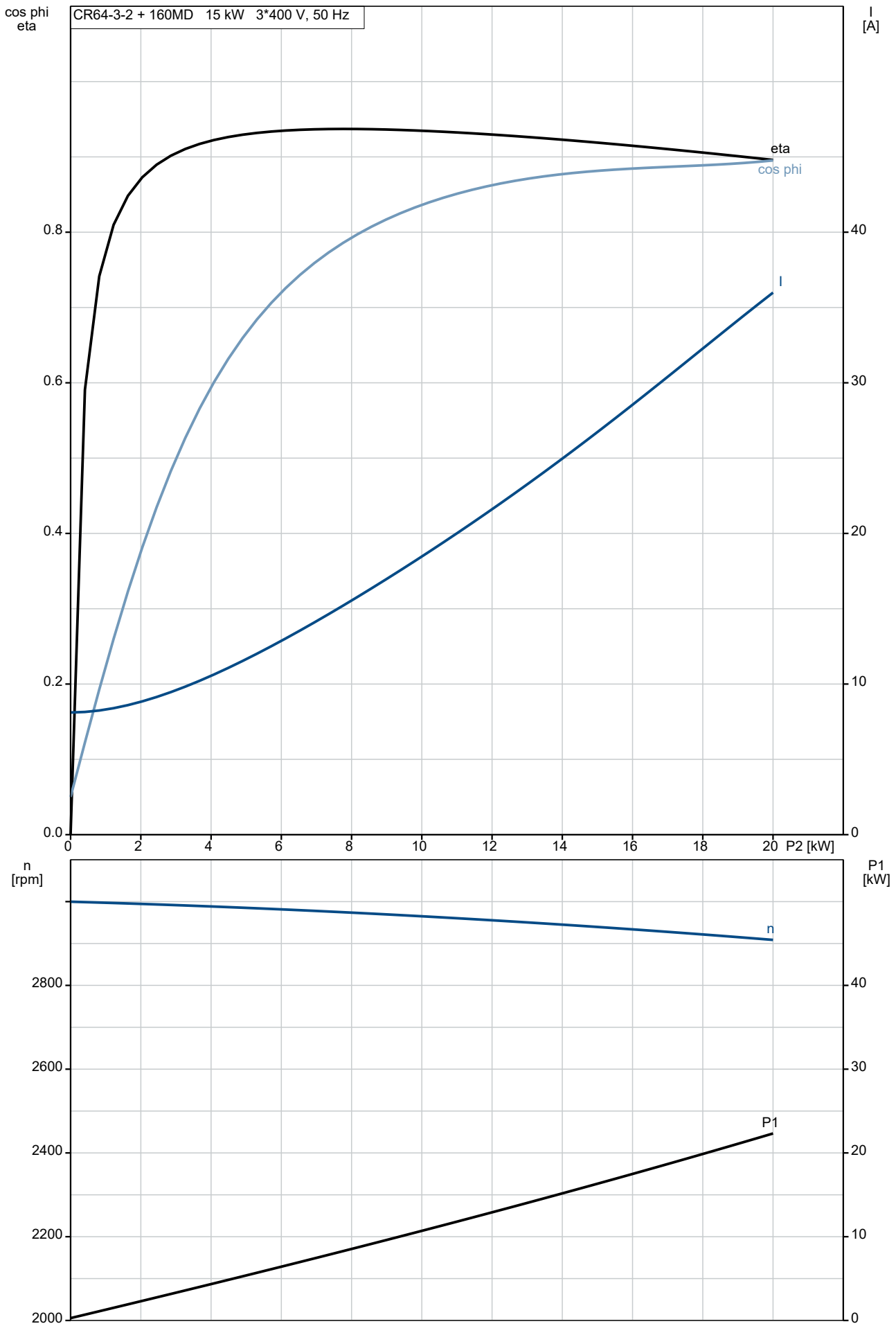

# 96123531 CR 64-3-2 A-F-A-E-HQQE 50 Hz

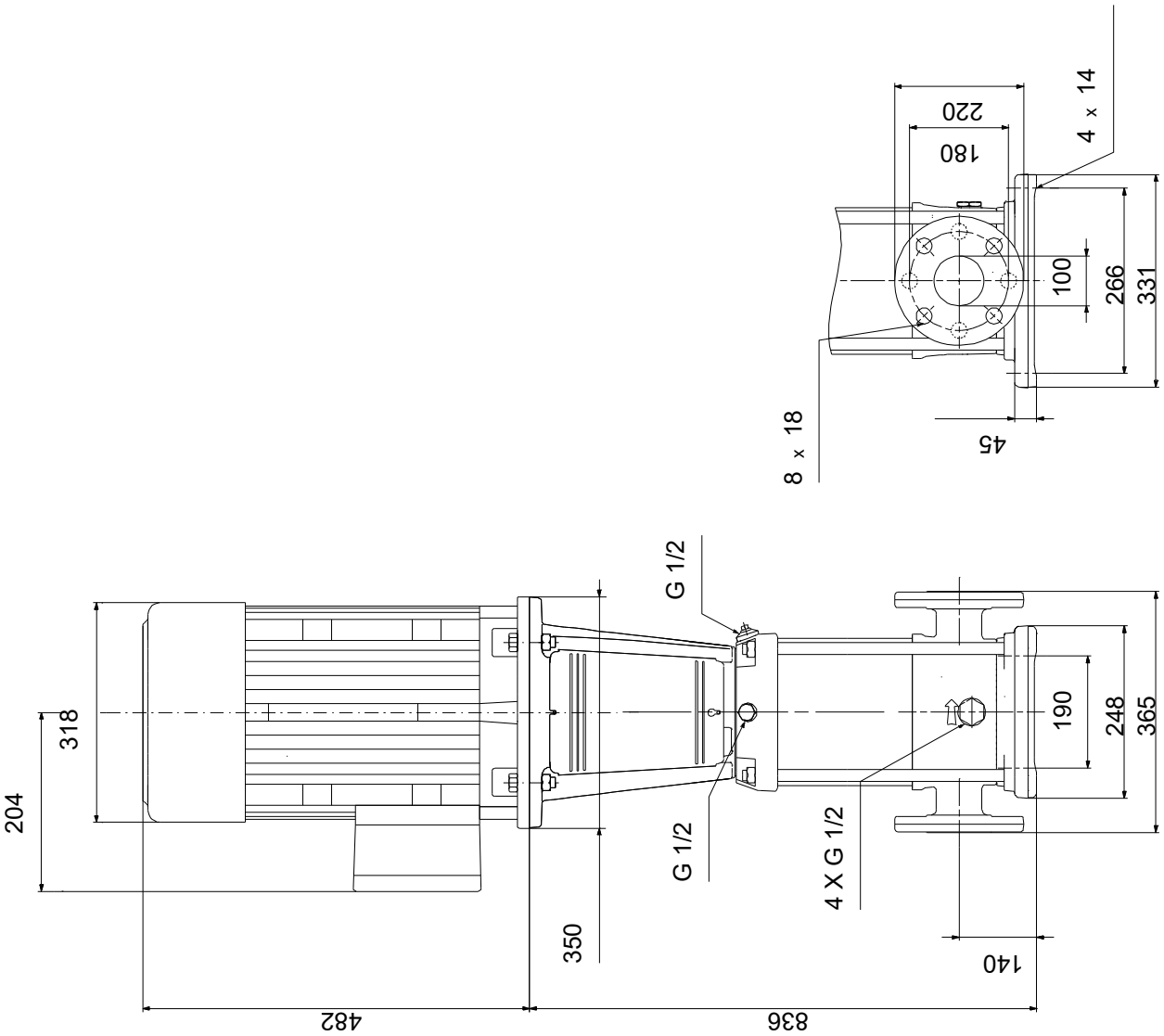


Note! All units are in [mm] unless others are stated.
Disclaimer: This simplified dimensional drawing does not show all details.

# Spare parts CR 64-3-2, Product No. 96123531
# Produced After 1410 (production year and week number)

| | Pos | Omschrijving | Opmerking tekst | Classificatie Gegevens | Onderdeelnr. | Aantal | Eenheid |
|---|---|---|---|---|---|---|---|
| - | | Base | | | 96587673 | 1 | pcs |
| | 6 | Base | | | | 1 | |
| - | 80 | Kit, chamber stack | | | 96416312 | 1 | pcs |
| - | 80 | Chamber stack | | | | 1 | |
| - | 3 | Upper chamber cpl. | | | | | 1 |
| | | Cone | | | | | |
| | | Spare, turbulence optimizer KP | | | | | |
| | | Spare, turbulence optimizer KP | | | | | |
| | | Spare, turbulence optimizer KP | | | | | |
| | | Spare, turbulence optimizer KP | | | | | |
| | | Spare, turbulence optimizer KP | | | | | |
| | 47d | Lock ring | | | | | |
| | 47c | Bush | | | | | |
| - | 4a | Intermediate chamber cpl. | | | | | 1 |
| | | Cone | | | | | |
| | | Spare, turbulence optimizer KP | | | | | |
| | | Spare, turbulence optimizer KP | | | | | |
| | | Spare, turbulence optimizer KP | | | | | |
| | | Spare, turbulence optimizer KP | | | | | |
| | | Spare, turbulence optimizer KP | | | | | |
| - | 45a | Neck ring cpl. | | | | | |
| | 45 | Seal ring | | | | | |
| | 46 | Neck ring | | | | | |
| | 65 | Top f/neck ring | | | | | |
| | 47 | Bearing | | | | | |
| - | 4 | Intermediate chamber cpl. | | | | | 1 |
| | | Cone | | | | | |
| | | Spare, turbulence optimizer KP | | | | | |
| | | Spare, turbulence optimizer KP | | | | | |
| | | Spare, turbulence optimizer KP | | | | | |
| | | Spare, turbulence optimizer KP | | | | | |
| | | Spare, turbulence optimizer KP | | | | | |
| - | 45a | Neck ring cpl. | | | | | |
| | 45 | Seal ring | | | | | |
| | 46 | Neck ring | | | | | |
| | 65 | Top f/neck ring | | | | | |
| | 47d | Lock ring | | | | | |
| | 47c | Bush | | | | | |
| | 26c | Washer | | Designation: DIN 125A | | | 2 |
| | | | | Thickness: 1,6 | | | |
| | 26b | Hex socket head cap screw | | | | | 2 |
| | 26a | Strap cpl. | | Length (mm): 257 | | | 2 |
| | | | | Thread: M8 | | | |
| - | 44 | Suction interconnector cpl. | | | | | 1 |
| | | Inlet part | | | | | |
| | 45 | Seal ring | | | | | |
| | 46 | Neck ring | | | | | |
| | 65 | Top f/neck ring | | | | | |
| - | 47a | Bearing cpl. | | | | | 1 |
| | | Driver | | | | | |
| | | Holder | | | | | |
| | | Disc spring | | | | | |
| | | Bearing ring | | | | | |
| - | 49e | Impeller cpl. | | | | | 1 |
| | 48 | Nut | | | | | |
| | 49b | Split cone | | | | | |
| - | 49 | Impeller | | | | | |
| | | Impeller hub | | | | | |
| | 49c | Wear ring | | | | | |

| | Pos | Omschrijving | Opmerking tekst | Classificatie Gegevens | Onderdeelnr. | Aantal | Eenheid |
|---|---|---|---|---|---|---|---|
| - | 49d | Impeller cpl. reduced diameter | | | | | 2 |
| | 48 | Nut | | | | | |
| | 49b | Split cone | | | | | |
| - | 49a | Impeller, reduced diameter | | | | | |
| | | Impeller hub | | | | | |
| | 49c | Wear ring | | | | | |
| | 51 | Shaft | | | | | 1 |
| - | | Kit, chambers | | | 98497500 | 1 | pcs |
| - | 4a | Intermediate chamber cpl. | | | | 1 | |
| | | Cone | | | | | 1 |
| | | Spare, turbulence optimizer KP | | | | | 1 |
| | | Spare, turbulence optimizer KP | | | | | 1 |
| | | Spare, turbulence optimizer KP | | | | | 1 |
| | | Spare, turbulence optimizer KP | | | | | 1 |
| | | Spare, turbulence optimizer KP | | | | | 10 |
| - | 45a | Neck ring cpl. | | | | | 1 |
| | 45 | Seal ring | | | | | |
| | 46 | Neck ring | | | | | |
| | 65 | Top f/neck ring | | | | | |
| | 47 | Bearing | | | | | 1 |
| - | 47a | Bearing cpl. | | | | 1 | |
| | | Driver | | | | | 1 |
| | | Holder | | | | | 1 |
| | | Disc spring | | | | | 1 |
| | | Bearing ring | | | | | 1 |
| - | | Kit, coupling | | | 96416592 | 1 | pcs |
| | | Adjusting fork | | | | 1 | |
| - | 8 | Coupling cpl. | | Dimension: 22/42 | | 1 | |
| | 9 | Hex socket head cap screw | | Designation: DIN 912 | | | 4 |
| | | | | Length (mm): 25 | | | |
| | | | | Thread: M10 | | | |
| | 10a | Coupling half | | | | | 2 |
| - | | Kit, coupling guard | | | 96505135 | 1 | pcs |
| | 7a | Socket button head screw | | | | 4 | |
| | 7 | Coupling guard | | | | 2 | |
| - | | Kit, cover | | | 98832448 | 1 | pcs |
| | 58a | Hex socket head cap screw | | Designation: DIN 912 | | 4 | |
| | | | | Length (mm): 25 | | | |
| | | | | Thread: M10 | | | |
| | 58 | Cover | | | | 1 | |
| - | | Kit, gaskets | | | 96416599 | 1 | pcs |
| | | Adjusting fork | | | | 1 | |
| | 37 | O-ring | | | | 2 | |
| | 38 | O-ring | | | | 2 | |
| | 38 | O-ring | | | | 4 | |
| | 60 | Spring | | | | 4 | |
| | 109 | O-ring | | | | 1 | |
| | 110 | O-ring | | Diameter: 21,2 | | 1 | |
| | | | | Material type: EPDM | | | |
| | | | | Thickness: 3,55 | | | |
| - | | Kit, impeller | | | 98497503 | 1 | pcs |
| | 48 | Nut | | | | 1 | |
| | 48 | Nut | | | | 1 | |
| | 49b | Split cone | | | | 1 | |
| - | 49 | Impeller | | | | 1 | |
| | | Impeller hub | | | | | 1 |
| | 49c | Wear ring | | | | | 1 |
| - | | Kit, Impeller, reduced | | | 98634080 | 1 | pcs |
| | 48 | Nut | | | | 1 | |
| | 48 | Nut | | | | 1 | |
| | 49b | Split cone | | | | 1 | |
| - | 49a | Impeller, reduced diameter | | | | 1 | |
| | | Impeller hub | | | | | 1 |
| | 49c | Wear ring | | | | | 1 |

| Pos | Omschrijving | Opmerking tekst | Classificatie Gegevens | Onderdeelnr. | Aantal | Eenheid |
|---|---|---|---|---|---|---|
| - | Kit, plug | | | 96505136 | 1 | pcs |
| - 18 | Air vent screw | | | | 1 | |
| | Spindle | | | | | 1 |
| | Plug | | | | | 1 |
| 25 | Plug | | | | 4 | |
| 25 | Plug | | | | 1 | |
| 38 | O-ring | | | | 2 | |
| 38 | O-ring | | | | 4 | |
| 38 | O-ring | | Diameter: 16,3 | | 2 | |
| | | | Material type: FKM | | | |
| | | | Thickness: 2,4 | | | |
| 38 | O-ring | | Diameter: 16,3 | | 4 | |
| | | | Material type: FKM | | | |
| | | | Thickness: 2,4 | | | |
| 38 | O-ring | | Diameter: 16,3 | | 6 | |
| | | | Material type: FKM | | | |
| | | | Thickness: 2,4 | | | |
| - | Kit, shaft seal HQQE | | | 96525458 | 1 | pcs |
| | Grinding device | | | | 1 | |
| - 105 | Shaft seal | | Material type: HQQE | | 1 | |
| | Adjusting fork | | | | | 1 |
| 109 | O-ring | | | | | 1 |
| 110 | O-ring | | Diameter: 21,5 | | | 1 |
| | | | Material type: EPDM | | | |
| | | | Thickness: 4,25 | | | |
| - | Kit, wear parts | | | 98497495 | 1 | pcs |
| 45 | Seal ring | | | | 8 | |
| 47d | Lock ring | | | | 8 | |
| 47c | Bush | | | | 6 | |
| 49c | Wear ring | | | | 8 | |
| 65 | Top f/neck ring | | | | 8 | |
| - | Motor | | | | 1 | pcs |
| - | Kit, bearing cpl. | | | 96796676 | 1 | |
| 32b | Waved washer | | | | | 2 |
| 153 | Angular-contact bearing | | | | | 1 |
| 154 | Ball bearing | | | | | 1 |
| 157 | O-ring | | | | | 1 |
| 159 | V-ring | | | | | 1 |
| - | Kit, bearing plate | | | 96796664 | 1 | |
| 155.a | Bearing cover | | | | | 1 |
| 208a | Gasket | | | | | 3 |
| 208 | Hex socket head cap screw | | Designation: DIN912 | | | 3 |
| | | | Length (mm): 40 | | | |
| | | | Thread: M5 | | | |
| - | Kit, eyebolt | | | 96796712 | 1 | |
| 189 | Eyebolt | | | | | 2 |
| - | Kit, fan | | | 96796654 | 1 | |
| 156.c | Retaining ring | | | | | 1 |
| 156 | Fan | | | | | 1 |
| - | Kit, fan cover | | | 96796647 | 1 | |
| 151 | Fan cover | | | | | 1 |
| 152.a | Rubber bush | | | | | 4 |
| 152 | Hex head cap screw | | | | | 4 |
| 196 | Diaphragm | | | | | 1 |
| - | Kit, flange | | | 96796662 | 1 | |
| 156.b | Flange | | | | | 1 |
| 159.b | Seal ring | | | | | 1 |
| 185.b | Nut | | | | | 4 |
| 185 | Hex socket head cap screw | | | | | 4 |

| Pos | Omschrijving | Opmerking tekst | Classificatie Gegevens | Onderdeelnr. | Aantal | Eenheid |
|---|---|---|---|---|---|---|
| 186 | Drain plug | | | | 4 | |
| 195.a | Grease nipple | | | | 1 | |
| - | Kit, gaskets | | | 96798508 | 1 | |
| 184 | O-ring | | Diameter: 235 | | 2 | |
| - | Kit, lubrication nipple | | | 96796671 | 1 | |
| 195.b | Grease nipple | | | | 2 | |
| 195.a | Grease nipple | | | | 1 | |
| - | Kit, ND-end shield cpl. | | | 96796669 | 1 | |
| 32b | Waved washer | | | | 1 | |
| 156.a | End shield NDE | | | | 1 | |
| 157 | O-ring | | | | 1 | |
| 159 | V-ring | | | | 1 | |
| 185.c | Nut | | | | 4 | |
| 185.a | Hex socket head cap screw | | | | 4 | |
| 195.b | Grease nipple | | | | 1 | |
| - | Kit, shaft seal | | | 96843459 | 1 | |
| 159.b | V-ring | | | | 1 | |
| 159 | V-ring | | | | 1 | |
| - | Kit, terminal board | | | 96796657 | 1 | |
| | Terminal connection | | | | 3 | |
| | Washer | | | | 12 | |
| 36 | Hex nut | | | | 12 | |
| 173 | Torx Screw | | | | 1 | |
| 176.d | Terminal board | | | | 1 | |
| 176 | Terminal board | | | | 1 | |
| 177 | Torx Screw | | | | 1 | |
| - | Kit, terminal box cover | | | 96796659 | 1 | |
| 164 | Terminal box cover | | | | 1 | |
| 273a | Pan head thread forming screw | | | | 4 | |
| 1a | Motor stool | | | 98993921 | 1 | pcs |
| 2 | Pump head | | | 96547433 | 1 | pcs |
| - 3 | Upper chamber cpl. | | | 98634144 | 1 | pcs |
| 47c | Bush | | | 99321194 | 1 | |
| + 4 | Intermediate chamber cpl. | | | 99481471 | 1 | pcs |
| - 4a | Intermediate chamber cpl. | | | 99262958 | 1 | pcs |
| 47 | Bearing | | | 99964632 | 1 | |
| 47 | Bearing | | | 99928986 | 1 | |
| - 4 | Intermediate chamber cpl. | | | 99481484 | 1 | pcs |
| - 45a | Neck ring cpl. | | | 96547441 | 1 | |
| 45 | Seal ring | | | 96536030 | 1 | |
| 65 | Top f/neck ring | | | 96536014 | 1 | |
| 7a | Socket button head screw | | | 96549696 | 4 | pcs |
| 7 | Coupling guard | | | 96603279 | 2 | pcs |
| 9 | Hex socket head cap screw | | Designation: DIN 912<br>Length (mm): 25<br>Thread: M10 | 99789390 | 4 | pcs |
| + 18 | Air vent screw | | | 96547461 | 1 | pcs |
| + 18 | Air vent screw | | | 95061351 | 1 | pcs |
| 25 | Plug | | | 96536013 | 1 | pcs |
| 26c | Washer | | Designation: DIN 125A<br>Thickness: 1,6 | 99262704 | 2 | pcs |
| 26c | Washer | | Designation: DIN 125A<br>Thickness: 1,6 | 99886930 | 2 | pcs |
| 26b | Hex socket head cap screw | | | 98931380 | 2 | pcs |
| 26a | Strap cpl. | | Length (mm): 257<br>Thread: M8 | 98907617 | 2 | pcs |
| 26 | Staybolt | | Length (mm): 415 | 98901699 | 4 | pcs |

| | Pos | Omschrijving | Opmerking tekst | Classificatie Gegevens | Onderdeelnr. | Aantal | Eenheid |
|---|---|---|---|---|---|---|---|
| | | | | Thread: M16 | | | |
| | 28.a | Hex head screw | | | 96620478 | 4 | pcs |
| | 28 | Hex socket head cap screw | | Designation: DIN 912 | 96536147 | 4 | pcs |
| | | | | Length (mm): 50 | | | |
| | | | | Thread: M10 | | | |
| | 32 | Washer | | Designation: DIN 125 A | 98923051 | 8 | pcs |
| | | | | Internal diameter: 17 | | | |
| | | | | Outer diameter: 30 | | | |
| | | | | Thickness: 3 | | | |
| | 36 | Hex nut | | Thread: M16 | 96620480 | 4 | pcs |
| | 37 | O-ring | | | 96536142 | 1 | pcs |
| | 38 | O-ring | | | 99198815 | 2 | pcs |
| | 38 | O-ring | | | 99412727 | 2 | pcs |
| - | 44 | Suction interconnector cpl. | | | 98634152 | 1 | pcs |
| | 45 | Seal ring | | | 96536030 | 1 | |
| | 65 | Top f/neck ring | | | 96536014 | 1 | |
| + | 47a | Bearing cpl. | | | 99270649 | 1 | pcs |
| + | 47a | Bearing cpl. | | | 96535951 | 1 | pcs |
| | 48 | Nut | | | 99262680 | 1 | pcs |
| | 48 | Nut | | | 99262683 | 1 | pcs |
| | 48 | Nut | | | 96536016 | 1 | pcs |
| - | 49e | Impeller cpl. | | | 96536036 | 1 | pcs |
| | 48 | Nut | | | 99262680 | 1 | |
| | 48 | Nut | | | 99262683 | 1 | |
| | 48 | Nut | | | 96536016 | 1 | |
| | 49b | Split cone | | | 96536010 | 1 | |
| + | 49e | Impeller cpl. | | | 98394371 | 1 | pcs |
| | 49b | Split cone | | | 96536010 | 1 | pcs |
| - | 49a | Impeller, reduced diameter | | | 99500075 | 1 | pcs |
| | 49c | Wear ring | | | 96535879 | 1 | |
| | 51 | Shaft | | | 98506334 | 1 | pcs |
| | 55 | Outer sleeve | | Outer diameter: 216 | 98820377 | 1 | pcs |
| | | | | Length (mm): 271 | | | |
| | 58 | Cover | | | 98893158 | 1 | pcs |
| | 60 | Spring | | | 96536032 | 4 | pcs |
| - | 105 | Shaft seal | | Material type: HQQE | 96984086 | 1 | pcs |
| | | Adjusting fork | | | 96587896 | 1 | |
| | 109 | O-ring | | | 99651108 | 1 | |
| | 109 | O-ring | | | 96547586 | 1 | |
| + | 105 | Shaft seal | | Material type: HQQE | 96984070 | 1 | pcs |
| | 440b | Lock ring | | | 96547435 | 1 | pcs |