Inventflow: Grundfos A-partner

Grundfos CRN 64-3-1 A-F-A-E-HQQE

Find the pump here:
https://inventflow.nl/en/pompenfilter/crn/grundfos-crn-64-3-1-a-f-a-e-hqqe

Contact

info@inventflow.nl
+31 (0) 546 45 80 72

Datasheet

Qty.	Description
1	**CRN 64-3-1 A-F-A-E-HQQE**

Product No.: 96123780
Vertical, non-self-priming, multistage, in-line, centrifugal pump for installation in pipe systems and mounting on a foundation.

The pump has the following characteristics:
- Impellers, intermediate chambers and outer sleeve are made of

Impeller: Stainless steel, EN 1.4401.
- Pump head cover and base are made of

Pump housing: Stainless steel, EN 1.4408.
- The shaft seal has assembly length according to EN 12756.
- Power transmission is via cast iron split coupling.

Flange standard: - Pipework connection is via DIN flanges/couplings.

Phase: The motor is a 3-phase AC motor.

Controls:
Frequency converter: NONE

Liquid:
Pumped liquid: Water
Liquid temperature range: -40 .. 120 °C
Selected liquid temperature: 20 °C
Density: 998.2 kg/m³

Technical:
Pump speed on which pump data are based: 2923 rpm
Rated flow: 64 m³/h
Rated head: 59.8 m
Pump orientation: Vertical
Shaft seal arrangement: Single
Code for shaft seal: HQQE
Approvals on nameplate: CE,EAC,UKCA,WRAS,ACS
Curve tolerance: ISO9906:2012 3B

Materials:
Base: Stainless steel
EN 1.4408
AISI 316
Impeller: Stainless steel
EN 1.4401
AISI 316
Bearing: SIC
Support bearing: Graflon

Installation:
Maximum ambient temperature: 60 °C
Maximum operating pressure: 16 bar
Max pressure at stated temp: 16 bar / 120 °C
16 bar / -40 °C

Qty.	Description	
	Type of connection:	DIN
	Size of inlet connection:	DN 100
	Size of outlet connection:	DN 100
	Pressure rating for connection:	PN 16
	Flange size for motor:	FF300
	Electrical data:	
	Motor standard:	IEC
	Motor type:	160MD
	IE Efficiency class:	IE3
	Rated power - P2:	15 kW
	Power (P2) required by pump:	15 kW
	Mains frequency:	50 Hz
	Rated voltage:	3 x 380-415D/660-690Y V
	Rated current:	28,0-26,0/16,2-15,6 A
	Starting current:	660-780 %
	Cos phi - power factor:	0.89-0.87
	Rated speed:	2930-2950 rpm
	Efficiency:	IE3 91,9%
	Motor efficiency at full load:	91.9-91.9 %
	Motor efficiency at 3/4 load:	92.4 %
	Motor efficiency at 1/2 load:	92.4 %
	Number of poles:	2
	Enclosure class (IEC 34-5):	55 Dust/Jetting
	Insulation class (IEC 85):	F
	Motor No:	85U17526
	Others:	
	Minimum efficiency index, MEI ≥:	0.70
	Net weight:	178 kg
	Gross weight:	211 kg
	Shipping volume:	0.495 m³
	Danish VVS No.:	385918031
	Country of origin:	DK
	Custom tariff no.:	84137075

96123780 CRN 64-3-1 A-F-A-E-HQQE 50 Hz

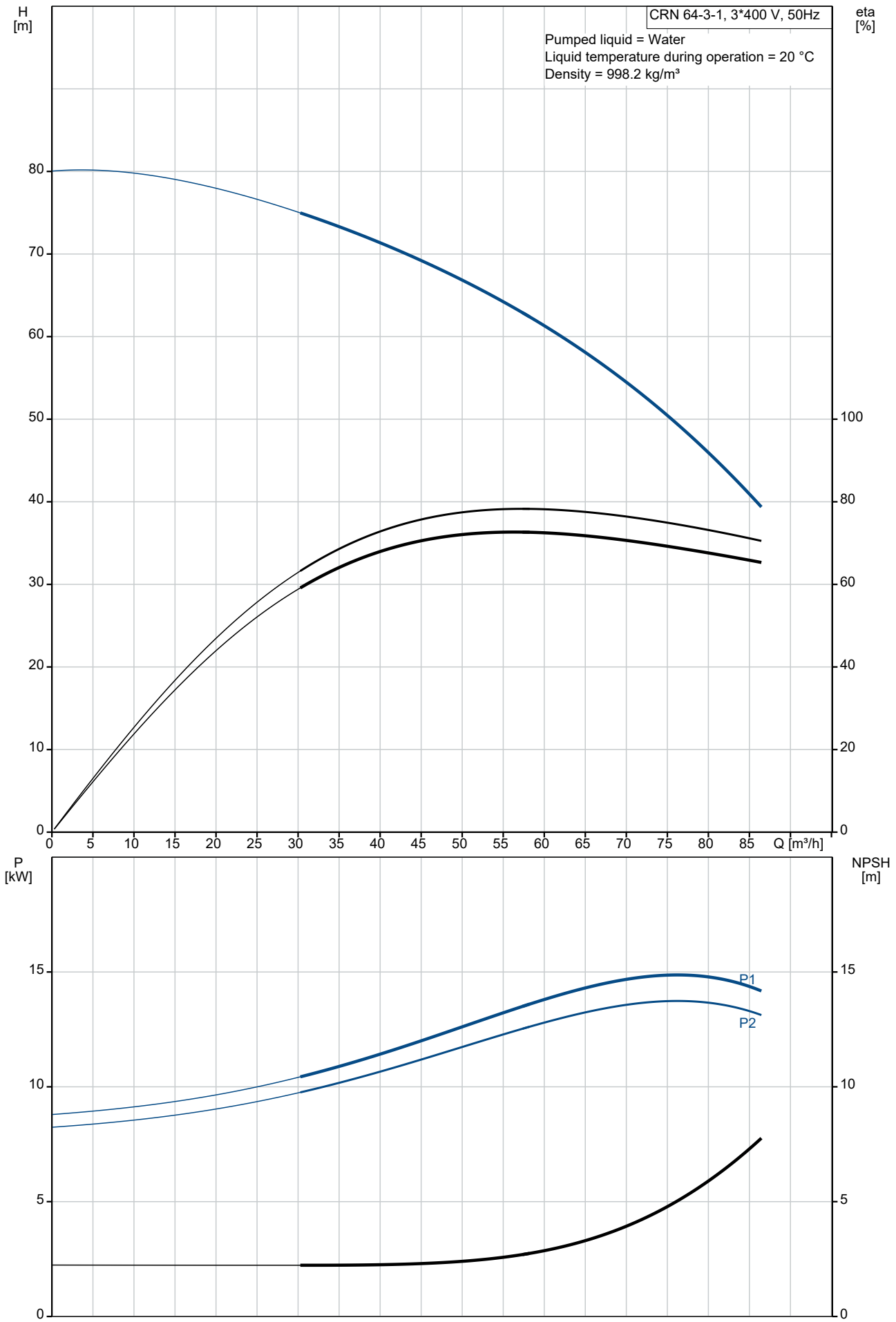

Description	Value
General information:	
Product name:	CRN 64-3-1 A-F-A-E-HQQE
Product No:	96123780
EAN number:	5700396700410
Technical:	
Pump speed on which pump data are based:	2923 rpm
Rated flow:	64 m³/h
Rated head:	59.8 m
Maximum head:	79.8 m
Stages:	3
Impellers:	3
Number of reduced-diameter impellers:	1
Low NPSH:	N
Pump orientation:	Vertical
Shaft seal arrangement:	Single
Code for shaft seal:	HQQE
Approvals on nameplate:	CE,EAC,UKCA,WRAS,ACS
Curve tolerance:	ISO9906:2012 3B
Pump version:	A
Model:	B
Materials:	
Base:	Stainless steel
Base:	EN 1.4408
Base:	AISI 316
Impeller:	Stainless steel
Impeller:	EN 1.4401
Impeller:	AISI 316
Material code:	A
Code for rubber:	E
Bearing:	SIC
Support bearing:	Graflon
Installation:	
Maximum ambient temperature:	60 °C
Maximum operating pressure:	16 bar
Max pressure at stated temp:	16 bar / 120 °C
Max pressure at stated temp:	16 bar / -40 °C
Type of connection:	DIN
Size of inlet connection:	DN 100
Size of outlet connection:	DN 100
Pressure rating for connection:	PN 16
Flange size for motor:	FF300
Connect code:	F
Liquid:	
Pumped liquid:	Water
Liquid temperature range:	-40 .. 120 °C
Selected liquid temperature:	20 °C
Density:	998.2 kg/m³
Electrical data:	
Motor standard:	IEC
Motor type:	160MD
IE Efficiency class:	IE3
Rated power - P2:	15 kW
Power (P2) required by pump:	15 kW
Mains frequency:	50 Hz
Rated voltage:	3 x 380-415D/660-690Y V
Rated current:	28,0-26,0/16,2-15,6 A
Starting current:	660-780 %
Cos phi - power factor:	0.89-0.87
Rated speed:	2930-2950 rpm
Efficiency:	IE3 91,9%
Motor efficiency at full load:	91.9-91.9 %

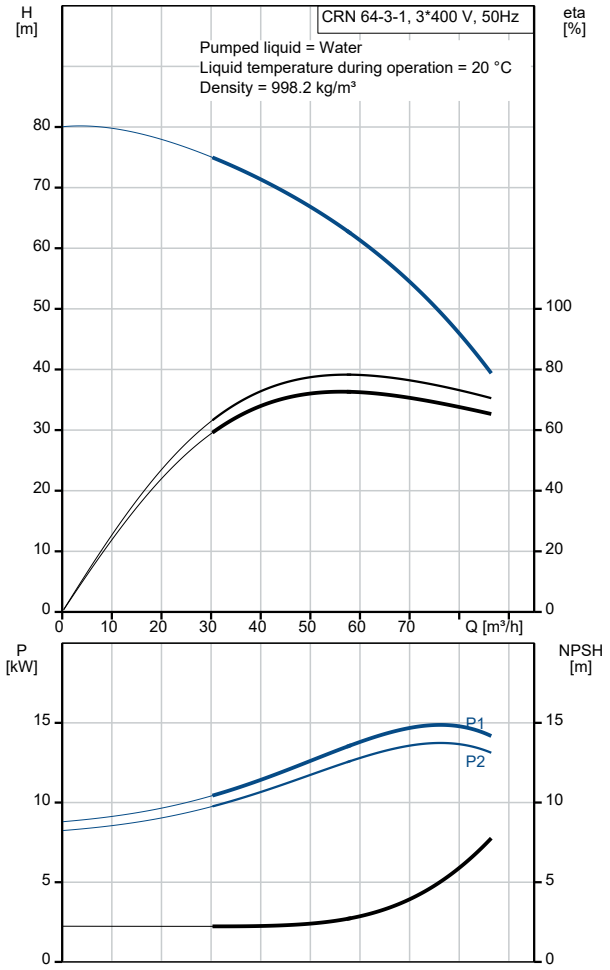

Description	Value
Motor efficiency at 3/4 load:	92.4 %
Motor efficiency at 1/2 load:	92.4 %
Number of poles:	2
Enclosure class (IEC 34-5):	55 Dust/Jetting
Insulation class (IEC 85):	F
Motor protec:	PTC
Motor No:	85U17526
Controls:	
Frequency converter:	NONE
Others:	
Minimum efficiency index, MEI ≥:	0.70
Net weight:	178 kg
Gross weight:	211 kg
Shipping volume:	0.495 m³
Danish VVS No.:	385918031
Country of origin:	DK
Custom tariff no.:	84137075

96123780 CRN 64-3-1 A-F-A-E-HQQE 50 Hz

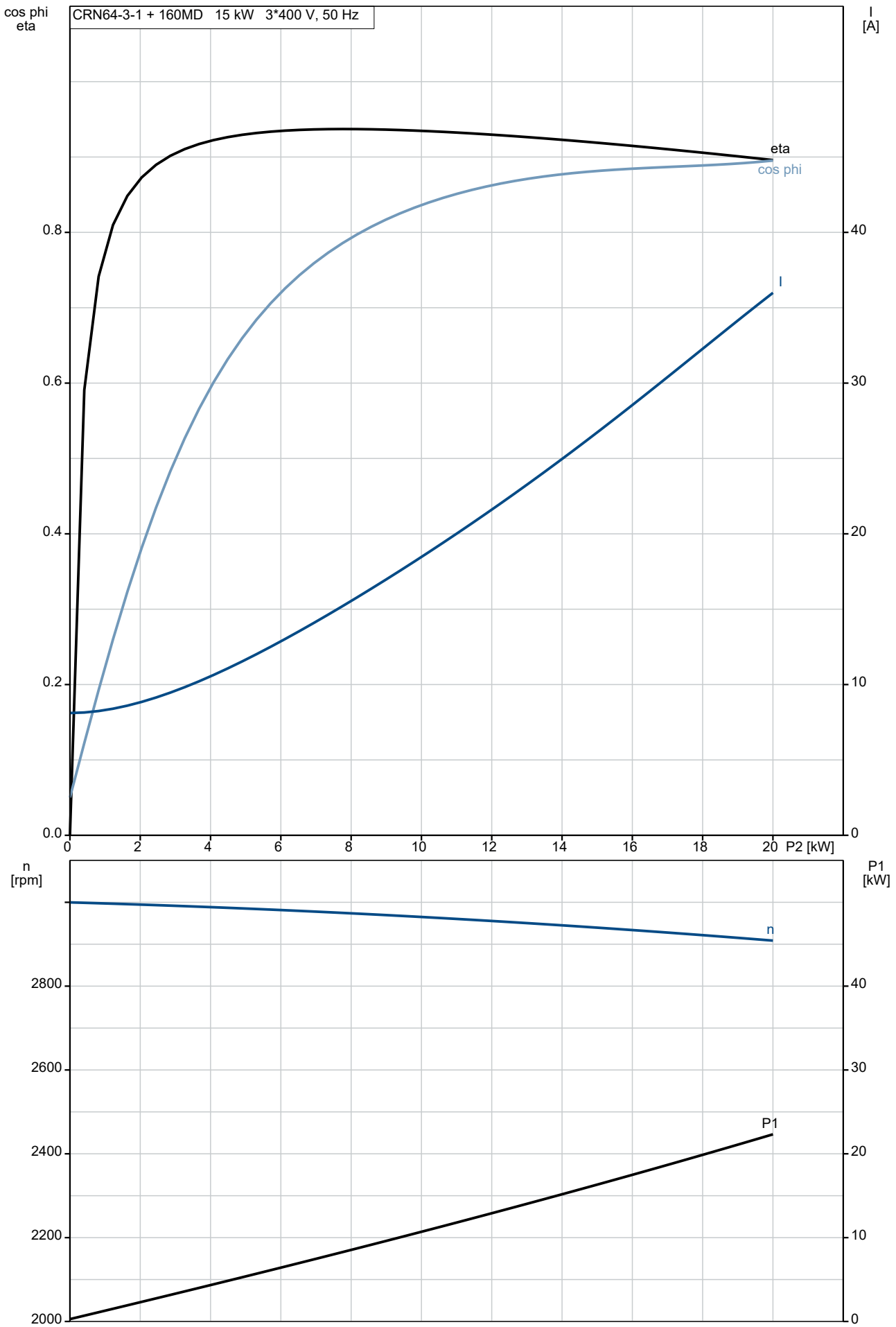

96123780 CRN 64-3-1 A-F-A-E-HQQE 50 Hz

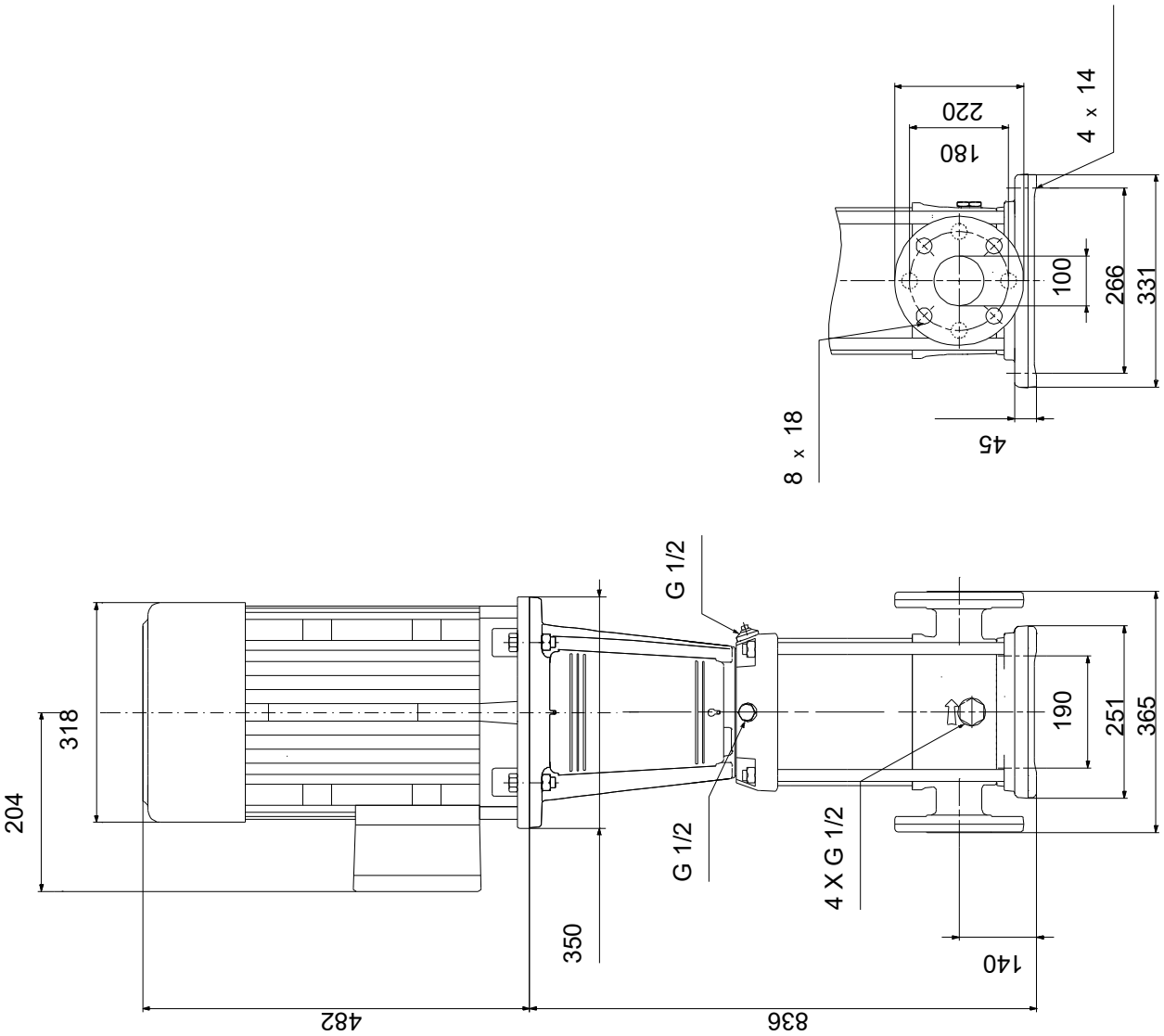

Note! All units are in [mm] unless others are stated.
Disclaimer: This simplified dimensional drawing does not show all details.

Spare parts CRN 64-3-1, Product No. 96123780
Produced After 1410 (production year and week number)

	Pos	Omschrijving	Opmerking tekst	Classificatie Gegevens	Onderdeelnr.	Aantal	Eenheid
-		Base			96587697	1	pcs
	6	Base				1	
-		Kit, chamber stack			96416332	1	pcs
-	80	Chamber stack				1	
-	3	Upper chamber cpl.					1
		Guide cup					
		Guide cup					
		Cone					
		Guide vane					
		Chamber					
		Chamber					
	47d	Lock ring					
	47c	Bush					
-	4a	Intermediate chamber cpl.					1
		Guide cup					
		Guide cup					
		Cone					
		Guide vane					
		Chamber					
		Chamber					
	45a	Neck ring cpl.					
	47	Bearing					
-	4	Intermediate chamber cpl.					1
		Guide cup					
		Guide cup					
		Cone					
		Guide vane					
		Chamber					
		Chamber					
	45a	Neck ring cpl.					
	47d	Lock ring					
	47c	Bush					
	26c	Washer		Designation: DIN 125A			2
				Thickness: 1,6			
	26b	Hex socket head cap screw					2
	26a	Strap cpl.		Length (mm): 257			2
				Thread: M8			
-	44	Suction interconnector cpl.					1
	44a	Inlet part					
	45	Seal ring					
	46	Neck ring					
	65	Top f/neck ring					
-	47a	Bearing cpl.					1
		Driver					
		Holder					
		Disc spring					
		Bearing ring					
-	49e	Impeller cpl.					2
	48	Nut					
	49b	Split cone					
-	49	Impeller					
		Impeller hub					
	49c	Wear ring					
-	49d	Impeller cpl. reduced diameter					1
	48	Nut					
	49b	Split cone					
-	49a	Impeller					
		Impeller hub					
	49c	Wear ring					

	Pos	Omschrijving	Opmerking tekst	Classificatie Gegevens	Onderdeelnr.	Aantal	Eenheid
	51	Shaft				1	
-		Kit, chambers			98634056	1	pcs
-	4a	Intermediate chamber cpl.				1	
		Guide cup				1	
		Guide cup				1	
		Cone				1	
		Guide vane				10	
		Chamber				1	
		Chamber				1	
	45a	Neck ring cpl.				1	
	47	Bearing				1	
-	47a	Bearing cpl.				1	
		Driver				1	
		Holder				1	
		Disc spring				1	
		Bearing ring				1	
-		Kit, coupling			96416592	1	pcs
		Adjusting fork				1	
-	8	Coupling cpl.		Dimension: 22/42		1	
	9	Hex socket head cap screw		Designation: DIN 912		4	
				Length (mm): 25			
				Thread: M10			
	10a	Coupling half				2	
-		Kit, coupling guard			96505135	1	pcs
	7a	Socket button head screw				4	
	7	Coupling guard				2	
-		Kit, cover			98832448	1	pcs
	58a	Hex socket head cap screw		Designation: DIN 912		4	
				Length (mm): 25			
				Thread: M10			
	58	Cover				1	
-		Kit, gaskets			96416599	1	pcs
		Adjusting fork				1	
	37	O-ring				2	
	38	O-ring				2	
	38	O-ring				4	
	60	Spring				4	
	109	O-ring				1	
	110	O-ring		Diameter: 21,2		1	
				Material type: EPDM			
				Thickness: 3,55			
-		Kit, impeller			98634079	1	pcs
	48	Nut				1	
	48	Nut				1	
	49b	Split cone				1	
-	49	Impeller				1	
		Impeller hub				1	
	49c	Wear ring				1	
-		Kit, Impeller, reduced			98634093	1	pcs
	48	Nut				1	
	48	Nut				1	
	49b	Split cone				1	
-	49a	Impeller				1	
		Impeller hub				1	
	49c	Wear ring				1	
-		Kit, plug			96505136	1	pcs
-	18	Air vent screw				1	
		Spindle				1	
		Plug				1	
	25	Plug				4	
	25	Plug				1	
	38	O-ring				2	
	38	O-ring				4	
	38	O-ring		Diameter: 16,3		2	

Pos	Omschrijving	Opmerking tekst	Classificatie Gegevens	Onderdeelnr.	Aantal	Eenheid
			Material type: FKM			
			Thickness: 2,4			
38	O-ring		Diameter: 16,3		4	
			Material type: FKM			
			Thickness: 2,4			
38	O-ring		Diameter: 16,3		6	
			Material type: FKM			
			Thickness: 2,4			
-	Kit, shaft seal HQQE			96525458	1	pcs
	Grinding device				1	
- 105	Shaft seal		Material type: HQQE		1	
	Adjusting fork					1
109	O-ring					1
110	O-ring		Diameter: 21,5			1
			Material type: EPDM			
			Thickness: 4,25			
-	Kit, wear parts			98497495	1	pcs
45	Seal ring				8	
47d	Lock ring				8	
47c	Bush				6	
49c	Wear ring				8	
65	Top f/neck ring				8	
-	Motor				1	pcs
-	Kit, bearing cpl.			96796676	1	
32b	Waved washer					2
153	Angular-contact bearing					1
154	Ball bearing					1
157	O-ring					1
159	V-ring					1
-	Kit, bearing plate			96796664	1	
155.a	Bearing cover					1
208a	Gasket					3
208	Hex socket head cap screw		Designation: DIN912			3
			Length (mm): 40			
			Thread: M5			
-	Kit, eyebolt			96796712	1	
189	Eyebolt					2
-	Kit, fan			96796654	1	
156.c	Retaining ring					1
156	Fan					1
-	Kit, fan cover			96796647	1	
151	Fan cover					1
152.a	Rubber bush					4
152	Hex head cap screw					4
196	Diaphragm					1
-	Kit, flange			96796662	1	
156.b	Flange					1
159.b	Seal ring					1
185.b	Nut					4
185	Hex socket head cap screw					4
186	Drain plug					4
195.a	Grease nipple					1
-	Kit, gaskets			96798508	1	
184	O-ring		Diameter: 235			2
-	Kit, lubrication nipple			96796671	1	
195.b	Grease nipple					2
195.a	Grease nipple					1
-	Kit, ND-end shield cpl.			96796669	1	
32b	Waved washer					1
156.a	End shield NDE					1
157	O-ring					1
159	V-ring					1
185.c	Nut					4
185.a	Hex socket head cap screw					4

	Pos	Omschrijving	Opmerking tekst	Classificatie Gegevens	Onderdeelnr.	Aantal	Eenheid
	195.b	Grease nipple					1
-		Kit, shaft seal			96843459	1	
	159.b	V-ring					1
	159	V-ring					1
-		Kit, terminal board			96796657	1	
		Terminal connection					3
		Washer					12
	36	Hex nut					12
	173	Torx Screw					1
	176.d	Terminal board					1
	176	Terminal board					1
	177	Torx Screw					1
-		Kit, terminal box cover			96796659	1	
	164	Terminal box cover					1
	273a	Pan head thread forming screw					4
	1a	Motor stool			98993921	1	pcs
	2	Pump head			96587726	1	pcs
-	3	Upper chamber cpl.			98634150	1	pcs
	47c	Bush			99321194	1	
+	4	Intermediate chamber cpl.			99481485	1	pcs
-	4a	Intermediate chamber cpl.			99262947	1	pcs
	47	Bearing			99964632	1	
	47	Bearing			99928986	1	
-	4	Intermediate chamber cpl.			99481486	1	pcs
	45a	Neck ring cpl.			96547434	1	
	45a	Neck ring cpl.			98678220	1	
+	4	Intermediate chamber cpl.			98634095	1	pcs
	7a	Socket button head screw			96549696	4	pcs
	7	Coupling guard			96603279	2	pcs
	9	Hex socket head cap screw		Designation: DIN 912	99789390	4	pcs
				Length (mm): 25			
				Thread: M10			
+	18	Air vent screw			96547461	1	pcs
+	18	Air vent screw			95061351	1	pcs
	25	Plug			96536013	1	pcs
	26c	Washer		Designation: DIN 125A	99262704	2	pcs
				Thickness: 1,6			
	26c	Washer		Designation: DIN 125A	99886930	2	pcs
				Thickness: 1,6			
	26b	Hex socket head cap screw			98931380	2	pcs
	26a	Strap cpl.		Length (mm): 257	98983898	2	pcs
				Thread: M8			
	26	Staybolt		Length (mm): 478	98976742	4	pcs
				Thread: M16			
	28.a	Hex head screw			96620478	4	pcs
	28	Hex socket head cap screw		Designation: DIN 912	96536147	4	pcs
				Length (mm): 50			
				Thread: M10			
	32	Washer		Designation: DIN 125 A2	99944260	4	pcs
				Internal diameter: 17			
				Outer diameter: 30			
				Thickness: 3			
	32	Washer		Designation: DIN 125 A	98923051	8	pcs
				Internal diameter: 17			
				Outer diameter: 30			
				Thickness: 3			
	36	Nut		Thread: M16	99944257	4	pcs
	36	Hex nut		Thread: M16	96620480	4	pcs
	37	O-ring			96536142	1	pcs
	37	O-ring		Diameter: 216	96536144	1	pcs
				Material type: FKM			
				Thickness: 4			
	38	O-ring			99198815	4	pcs
	38	O-ring		Diameter: 16,3	99198813	2	pcs

	Pos	Omschrijving	Opmerking tekst	Classificatie Gegevens	Onderdeelnr.	Aantal	Eenheid
				Material type: FKM			
				Thickness: 2,4			
	38	O-ring			99412727	4	pcs
	38	O-ring		Diameter: 16,3	99412883	2	pcs
				Material type: FKM			
				Thickness: 2,4			
-	44	Suction interconnector cpl.			98634153	1	pcs
	45	Seal ring			96536030	1	
	65	Top f/neck ring			96536014	1	
+	47a	Bearing cpl.			99270649	1	pcs
+	47a	Bearing cpl.			96535951	1	pcs
	48	Nut			99262680	1	pcs
	48	Nut			99262683	1	pcs
	48	Nut			96536016	1	pcs
-	49e	Impeller cpl.			98394372	2	pcs
	48	Nut			99262680	1	
	48	Nut			99262683	1	
	48	Nut			96536016	1	
	49b	Split cone			96536010	1	
	49b	Split cone			96536010	1	pcs
-	49a	Impeller			99500070	1	pcs
	49c	Wear ring			96535879	1	
+	49a	Impeller			96587707	1	pcs
	51	Shaft			98506335	1	pcs
	55	Outer sleeve			98820383	1	pcs
	58	Cover			98893158	1	pcs
	60	Spring			96536032	4	pcs
-	105	Shaft seal		Material type: HQQE	96984086	1	pcs
		Adjusting fork			96587896	1	
	109	O-ring			99651108	1	
	109	O-ring			96547586	1	
+	105	Shaft seal		Material type: HQQE	96984070	1	pcs
	440b	Lock ring			96547435	1	pcs