Inventflow: Grundfos A-partner

Grundfos CRN 20-1 A-FGJ-A-E-HQQE

Find the pump here:
https://inventflow.nl/en/pompenfilter/crn/grundfos-crn-20-1-a-fgj-a-e-hqqe

Contact

info@inventflow.nl
+31 (0) 546 45 80 72

Datasheet

Qty.	Description
1	**CRN 20-1 A-FGJ-A-E-HQQE**

Product No.: 96500393
Vertical, non-self-priming, multistage, in-line, centrifugal pump for installation in pipe systems and mounting on a foundation.

The pump has the following characteristics:
- Impellers, intermediate chambers and outer sleeve are made of

Impeller: Stainless steel, EN 1.4401.
- Pump head cover and base are made of

Pump housing: Stainless steel, EN 1.4408.
- The shaft seal has assembly length according to EN 12756.
- Power transmission is via cast iron split coupling.

Flange standard: - Pipework connection is via DIN / ANSI / JIS flanges/couplings.

Phase: The motor is a 3-phase AC motor.

Controls:
Frequency converter: NONE

Liquid:
Pumped liquid: Water
Liquid temperature range: -20 .. 120 °C
Selected liquid temperature: 20 °C
Density: 998.2 kg/m³

Technical:
Pump speed on which pump data are based: 2853 rpm
Rated flow: 21 m³/h
Rated head: 9.9 m
Pump orientation: Vertical
Shaft seal arrangement: Single
Code for shaft seal: HQQE
Approvals on nameplate: CE,EAC,UKCA,WRAS,ACS
Curve tolerance: ISO9906:2012 3B

Materials:
Base: Stainless steel
EN 1.4408
AISI 316
Impeller: Stainless steel
EN 1.4401
AISI 316
Bearing: SIC

Installation:
Maximum ambient temperature: 60 °C
Maximum operating pressure: 25 bar
Max pressure at stated temp: 25 bar / 120 °C
25 bar / -20 °C
Type of connection: DIN / ANSI / JIS

Qty.	Description	
	Size of inlet connection:	DN 50
	Size of outlet connection:	DN 50
	Pressure rating for connection:	PN 25
	Flange rating inlet:	300 lb
	Flange size for motor:	FT100
	Electrical data:	
	Motor standard:	IEC
	Motor type:	80C
	IE Efficiency class:	IE3
	Rated power - P2:	1.1 kW
	Power (P2) required by pump:	1.1 kW
	Mains frequency:	50 Hz
	Rated voltage:	3 x 220-240D/380-415Y V
	Rated current:	4.35/2.50 A
	Starting current:	450-500 %
	Cos phi - power factor:	0.83-0.76
	Rated speed:	2840-2870 rpm
	Efficiency:	IE3 82,7%
	Motor efficiency at full load:	82.7 %
	Motor efficiency at 3/4 load:	84.6 %
	Motor efficiency at 1/2 load:	85.4 %
	Number of poles:	2
	Enclosure class (IEC 34-5):	55 Dust/Jetting
	Insulation class (IEC 85):	F
	Motor No:	85U05105
	Others:	
	Minimum efficiency index, MEI ≥:	0.70
	Net weight:	39 kg
	Gross weight:	52 kg
	Shipping volume:	0.173 m³
	Country of origin:	HU
	Custom tariff no.:	84137075

96500393 CRN 20-1 A-FGJ-A-E-HQQE 50 Hz

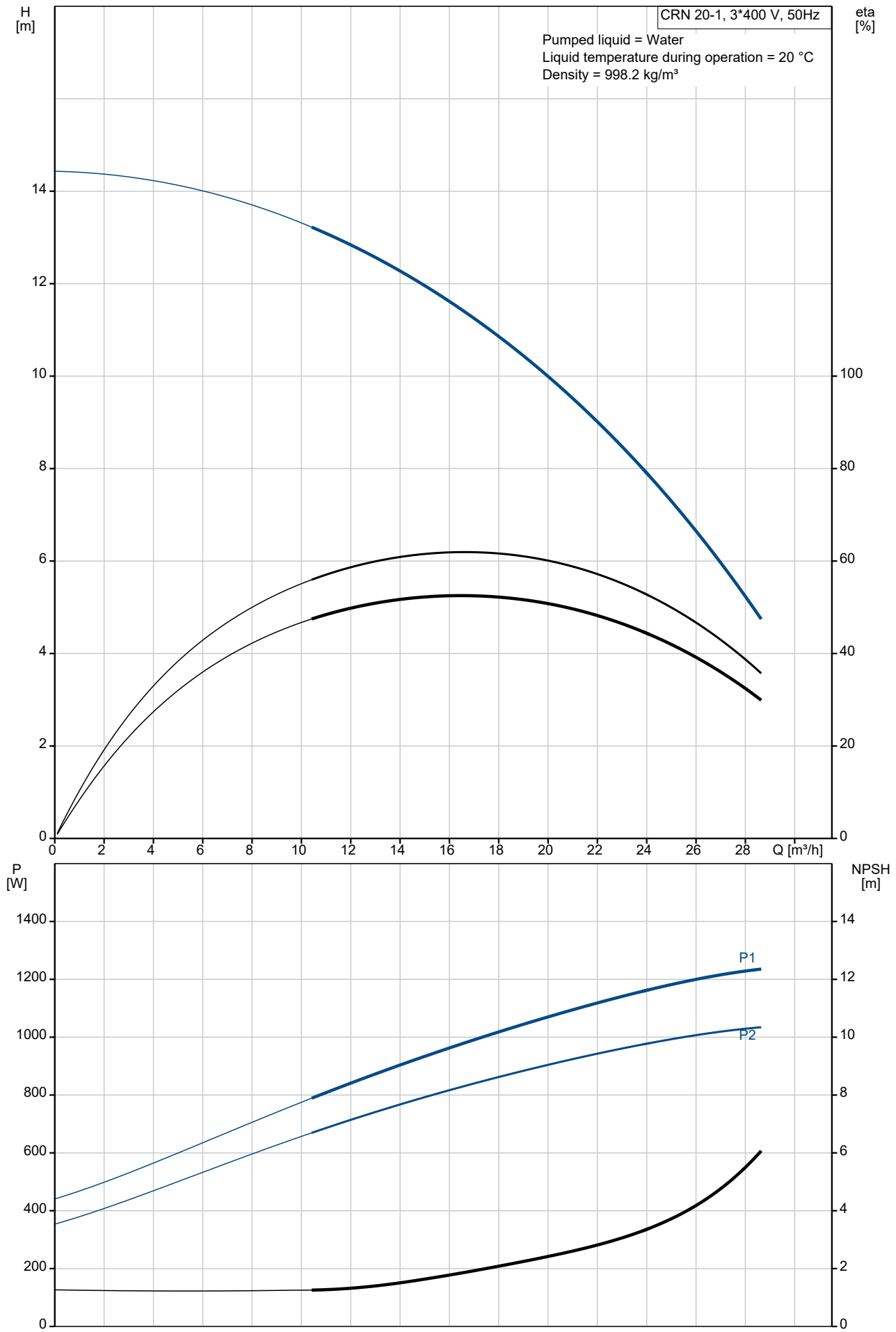

Description	Value
General information:	
Product name:	CRN 20-1 A-FGJ-A-E-HQQE
Product No:	96500393
EAN number:	5700396200927
Technical:	
Pump speed on which pump data are based:	2853 rpm
Rated flow:	21 m³/h
Rated head:	9.9 m
Maximum head:	14 m
Stages:	2
Impellers:	1
Number of reduced-diameter impellers:	0
Low NPSH:	N
Pump orientation:	Vertical
Shaft seal arrangement:	Single
Code for shaft seal:	HQQE
Approvals on nameplate:	CE,EAC,UKCA,WRAS,ACS
Curve tolerance:	ISO9906:2012 3B
Pump version:	A
Model:	A
Materials:	
Base:	Stainless steel
Base:	EN 1.4408
Base:	AISI 316
Impeller:	Stainless steel
Impeller:	EN 1.4401
Impeller:	AISI 316
Material code:	A
Code for rubber:	E
Bearing:	SIC
Installation:	
Maximum ambient temperature:	60 °C
Maximum operating pressure:	25 bar
Max pressure at stated temp:	25 bar / 120 °C
Max pressure at stated temp:	25 bar / -20 °C
Type of connection:	DIN / ANSI / JIS
Size of inlet connection:	DN 50
Size of outlet connection:	DN 50
Pressure rating for connection:	PN 25
Flange rating inlet:	300 lb
Flange size for motor:	FT100
Connect code:	FGJ
Liquid:	
Pumped liquid:	Water
Liquid temperature range:	-20 .. 120 °C
Selected liquid temperature:	20 °C
Density:	998.2 kg/m³
Electrical data:	
Motor standard:	IEC
Motor type:	80C
IE Efficiency class:	IE3
Rated power - P2:	1.1 kW
Power (P2) required by pump:	1.1 kW
Mains frequency:	50 Hz
Rated voltage:	3 x 220-240D/380-415Y V
Rated current:	4.35/2.50 A
Starting current:	450-500 %
Cos phi - power factor:	0.83-0.76
Rated speed:	2840-2870 rpm
Efficiency:	IE3 82,7%
Motor efficiency at full load:	82.7 %

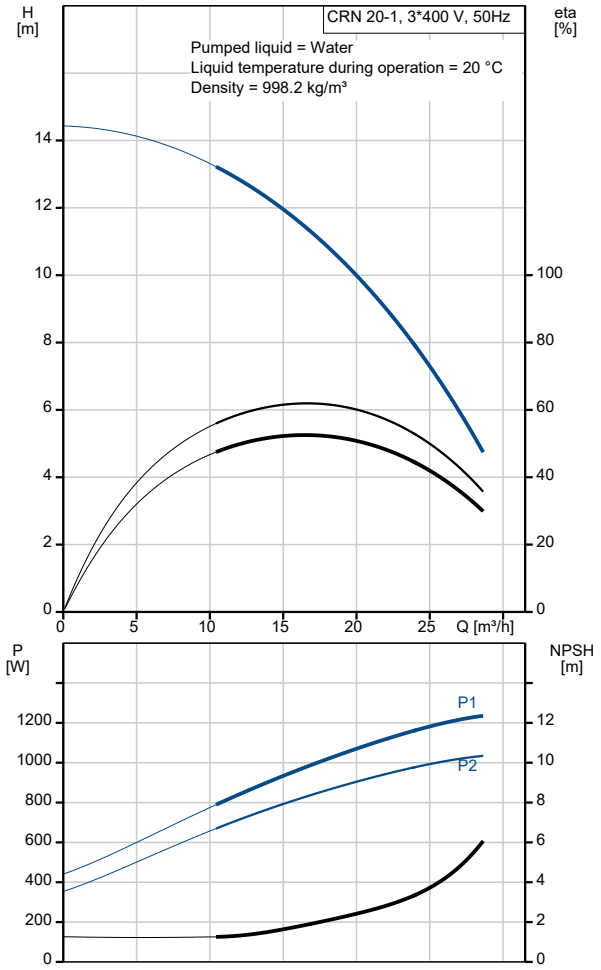

Description	Value
Motor efficiency at 3/4 load:	84.6 %
Motor efficiency at 1/2 load:	85.4 %
Number of poles:	2
Enclosure class (IEC 34-5):	55 Dust/Jetting
Insulation class (IEC 85):	F
Motor protec:	NONE
Motor No:	85U05105
Controls:	
Frequency converter:	NONE
Others:	
Minimum efficiency index, MEI ≥:	0.70
Net weight:	39 kg
Gross weight:	52 kg
Shipping volume:	0.173 m^3
Country of origin:	HU
Custom tariff no.:	84137075

96500393 CRN 20-1 A-FGJ-A-E-HQQE 50 Hz

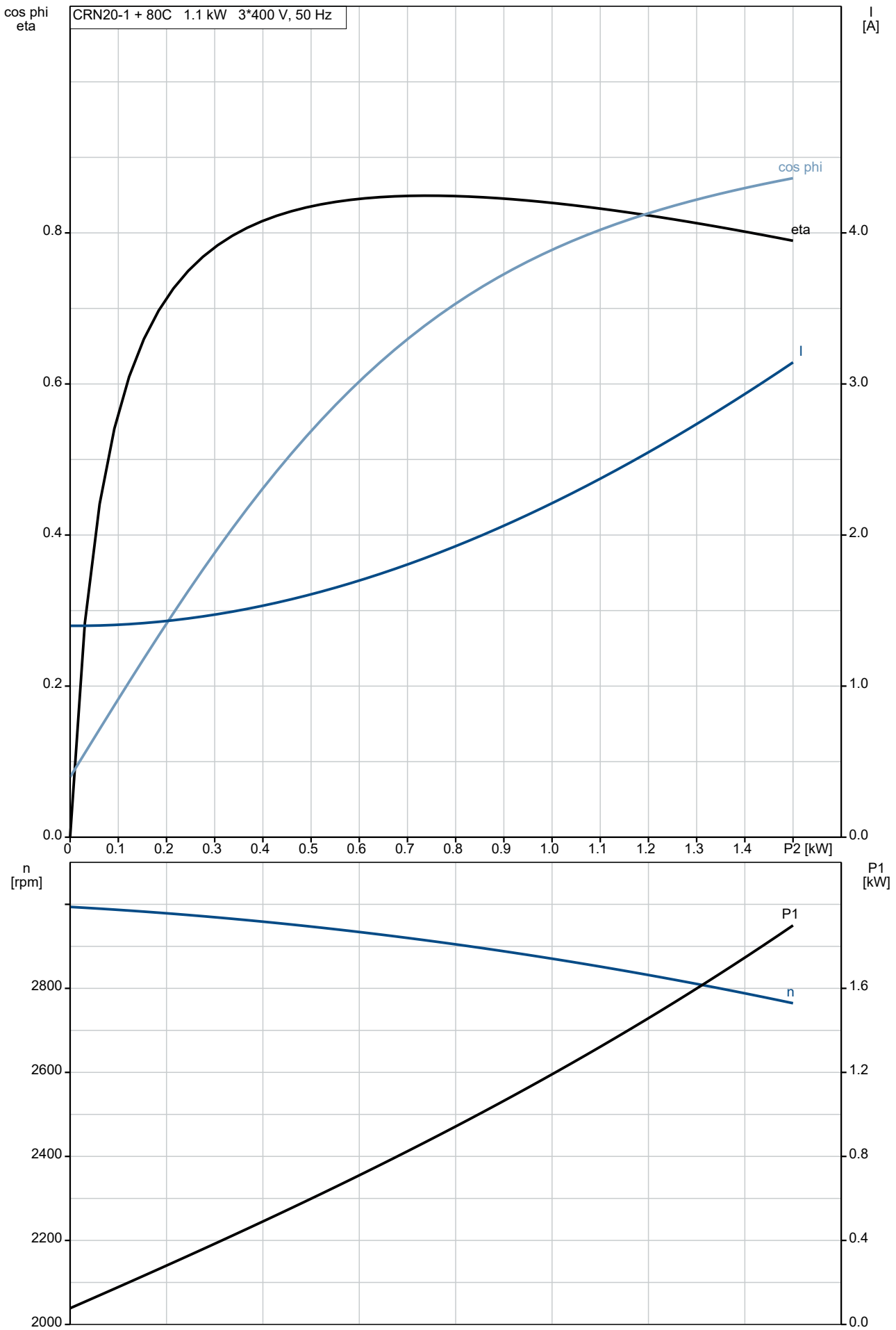

96500393 CRN 20-1 A-FGJ-A-E-HQQE 50 Hz

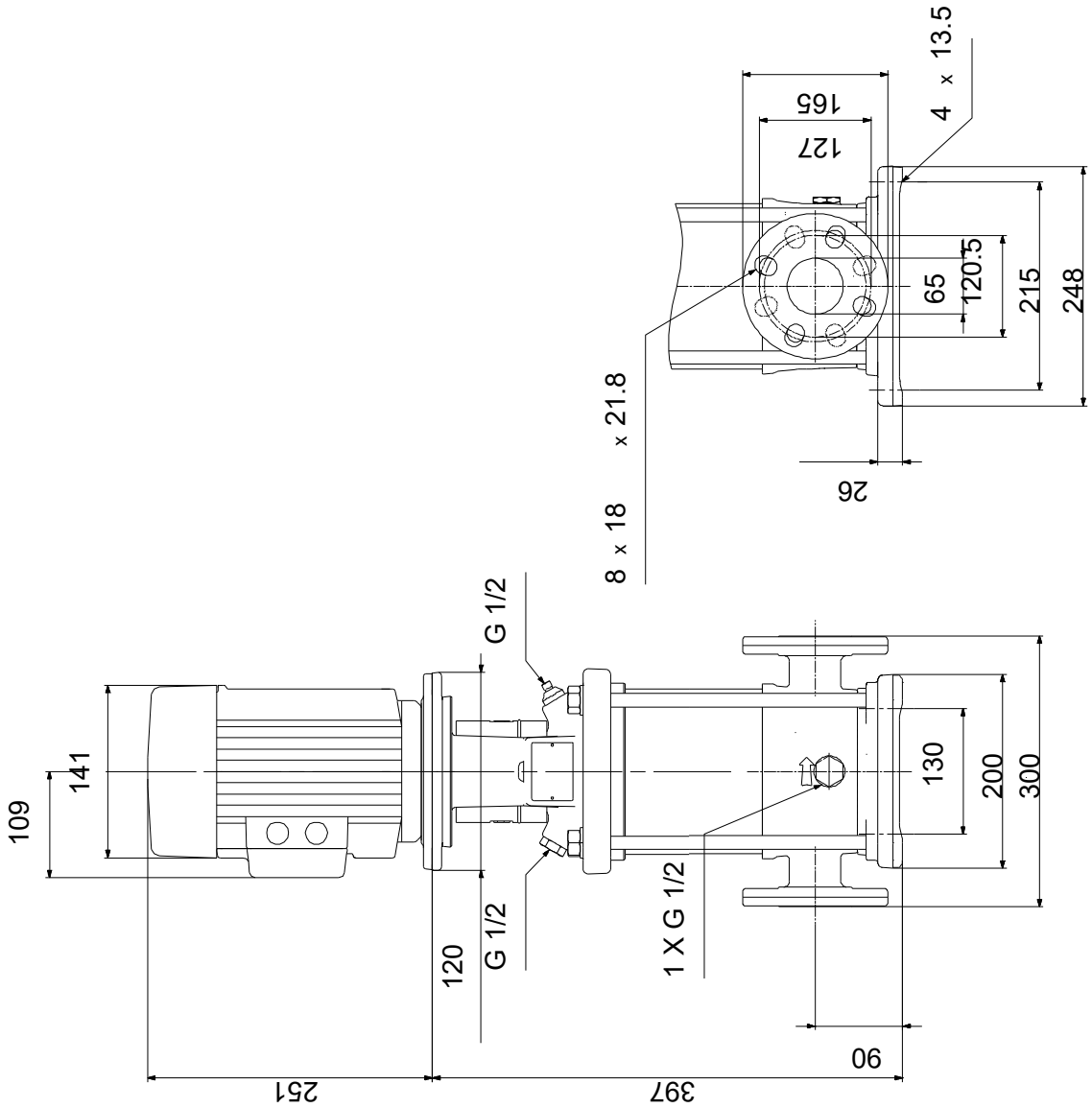

Note! All units are in [mm] unless others are stated.
Disclaimer: This simplified dimensional drawing does not show all details.

Spare parts CRN 20-1, Product No. 96500393
Produced After 1101 (production year and week number)

	Pos	Omschrijving	Opmerking tekst	Classificatie Gegevens	Onderdeelnr.	Aantal	Eenheid
-		Kit, chamber stack			96491784	1	pcs
-	80	Chamber stack				1	
-	4a	Intermediate chamber cpl.					1
		Sand Lifter					
		Guide cup					
		Bearing plate					
		Guide vane					
	3	Intermediate chamber					
	45	Neck ring cpl.					
	47	Bearing bush					
	65	Retainer					
-	4	Upper chamber cpl.					1
	3	Chamber					
	26a	Strap cpl.					2
	26.c	Washer		Designation: DIN 125A			2
				Thickness: 1,6			
	26.b	Hex head screw					2
	44b	Inlet part					1
-	44a	Inlet part cpl.					1
	45	Neck ring cpl.					
	65	Retainer					
	47a	Bearing ring					1
-	49	Impeller cpl.					1
	49c	Wear ring					
	49	Impeller					
-	51	Shaft, spline, cpl.					1
	62	Retaining ring					
	64d	Spacing bush					1
	64c	Spacer					1
	64b	Spacing bush		Length (mm): 5.00			1
	64a	Spacing pipe		Internal diameter: 17,5			1
				Length (mm): 17			
	64	Spacing pipe		Length (mm): 29.05			1
	66	Wedge lock washer					1
	67	Lock nut		Thread: M8			1
-		Kit, coupling			96511317	1	pcs
		Adjusting fork				1	
	9	Hex socket head cap screw		Designation: DIN 912		4	
				Length (mm): 20			
				Thread: M6			
	10a	Coupling half				2	
	10	Shaft pin		Diameter: 5		1	
				Length (mm): 26			
-		Kit, coupling guard			96509611	1	pcs
	7.a	Combi Slot Torx screw				4	
	7	Coupling guard				2	
-		Kit, gaskets			96509609	1	pcs
		Gasket				2	
	24	O-ring				2	
	37	O-ring				2	
	38	O-ring				1	
	38	O-ring				1	
	38	O-ring				2	
	60	Spring				4	
	415	Gasket		Internal diameter: 44		2	
				Outer diameter: 60			
				Thickness: 2			

Pos	Omschrijving	Opmerking tekst	Classificatie Gegevens	Onderdeelnr.	Aantal	Eenheid
441b	Gasket		Internal diameter: 49		2	
			Outer diameter: 92			
			Thickness: 2			
-	Kit, plug			96511312	1	pcs
- 18	Air vent screw				1	
	Spindle					1
	Plug					1
25a	Drain plug				1	
25	Plug				1	
38	O-ring				1	
38	O-ring				1	
38	O-ring				2	
38	O-ring		Diameter: 5,3		1	
			Material type: FKM			
			Thickness: 2,4			
38	O-ring		Diameter: 16,3		1	
			Material type: FKM			
			Thickness: 2,4			
38	O-ring		Diameter: 16,3		2	
			Material type: FKM			
			Thickness: 2,4			
-	Kit, shaft seal HQQE			96511844	1	pcs
105	Shaft seal		Material type: HQQE		1	
-	Kit, wear parts			96511824	1	pcs
- 4a	Intermediate chamber cpl.				1	
	Sand Lifter					1
	Guide cup					1
	Bearing plate					1
	Guide vane					10
3	Intermediate chamber					1
45	Neck ring cpl.					1
47	Bearing bush					1
65	Retainer					1
26.c	Washer		Designation: DIN 125A		2	
			Thickness: 1,6			
26.b	Hex head screw				2	
45	Neck ring cpl.				5	
47a	Bearing ring				1	
49c	Wear ring				6	
62	Retaining ring				1	
64d	Spacing bush				1	
64c	Spacer				1	
64b	Spacing bush		Length (mm): 5.00		1	
64a	Spacing pipe		Internal diameter: 17,5		1	
			Length (mm): 17			
65	Retainer				5	
66	Wedge lock washer				1	
67	Lock nut		Thread: M8		1	
-	Motor			91333027	1	pcs
-	Kit, Ball bearing			96279730	1	
111	Ball bearing		Designation: 6204.2Z.C3.SYN			1
111	Ball bearing					1
157	O-ring		Diameter: 32			1
			Material type: NBR			
			Thickness: 2			
158	Waved washer					1
-	Kit, fan			96279721	1	
156	Fan					1
159a	Seal ring					1
-	Kit, fan cover			96279720	1	
151	Fan cover					1
152	Pan head thread forming screw					2

Pos	Omschrijving	Opmerking tekst	Classificatie Gegevens	Onderdeelnr.	Aantal	Eenheid
-	Kit, flange			96279854	1	
156b	Flange					1
159c	Seal ring					1
184	Gasket		Internal diameter: 114,80			1
			Outer diameter: 121,20			
			Thickness: 0,25			
185	Pan head screw					4
186	Drain plug					1
-	Kit, shaft seal			96279722	1	
159c	Seal ring					1
159a	Seal ring					1
-	Kit, terminal box			96279724	1	
152	Pan head thread forming screw					4
164a	Terminal box w/gasket					1
164	Terminal box cover w/gasket					1
173a	Washer		Designation: SQUARE			1
			Internal diameter: 5,5			
			Outer diameter: 10X10			
			Thickness: 1,5			
173a	Base					1
173	Pan head thread forming screw		Designation: COMBI TORX T25			1
173	Pan head screw		Designation: DIN 7985			1
175	Pan head screw		Designation: DIN 7985			2
176	Terminal cpl.					1
-	Motor			85901513	1	pcs
-	Kit, Ball bearing			96279730	1	
111	Ball bearing		Designation: 6204.2Z.C3.SYN			1
111	Ball bearing					1
157	O-ring		Diameter: 32			1
			Material type: NBR			
			Thickness: 2			
158	Waved washer					1
-	Kit, fan			96279721	1	
156	Fan					1
159a	Seal ring					1
-	Kit, fan cover			96279720	1	
151	Fan cover					1
152	Pan head thread forming screw					2
-	Kit, flange			96279854	1	
156b	Flange					1
159c	Seal ring					1
184	Gasket		Internal diameter: 114,80			1
			Outer diameter: 121,20			
			Thickness: 0,25			
185	Pan head screw					4
186	Drain plug					1
-	Kit, shaft seal			96279722	1	
159c	Seal ring					1
159a	Seal ring					1
-	Kit, terminal box			96279724	1	
152	Pan head thread forming screw					4
164a	Terminal box w/gasket					1
164	Terminal box cover w/gasket					1

Pos	Omschrijving	Opmerking tekst	Classificatie Gegevens	Onderdeelnr.	Aantal	Eenheid
173a	Washer		Designation: SQUARE			1
			Internal diameter: 5,5			
			Outer diameter: 10X10			
			Thickness: 1,5			
173a	Base					1
173	Pan head thread forming screw		Designation: COMBI TORX T25			1
173	Pan head screw		Designation: DIN 7985			1
175	Pan head screw		Designation: DIN 7985			2
176	Terminal cpl.					1
1a	Pump head			98824713	1	pcs
2	Pump cover			98481138	1	pcs
- 4a	Intermediate chamber cpl.			96538853	1	pcs
3	Intermediate chamber			98371143	1	
65	Retainer			96547341	1	
+ 4a	Intermediate chamber cpl.			98371117	1	pcs
6	Base			98482550	1	pcs
7.a	Combi Slot Torx screw			96886324	4	pcs
10	Shaft pin		Diameter: 5	96536473	1	pcs
			Length (mm): 26			
10	Shaft pin		Diameter: 5	96587588	1	pcs
			Length (mm): 26			
+ 18	Air vent screw			96547461	1	pcs
+ 18	Air vent screw			95061351	1	pcs
25	Plug			96536013	1	pcs
26a	Strap cpl.			98964727	2	pcs
26.c	Washer		Designation: DIN 125A	99262704	2	pcs
			Thickness: 1,6			
26.c	Washer		Designation: DIN 125A	99886930	2	pcs
			Thickness: 1,6			
26	Staybolt			98982874	4	pcs
32	Washer		Designation: DIN 125 A2	99944260	4	pcs
			Internal diameter: 17			
			Outer diameter: 30			
			Thickness: 3			
36	Nut		Thread: M16	99944257	4	pcs
37.a	O-ring			96538857	1	pcs
38	O-ring			99198791	1	pcs
38	O-ring			99198815	2	pcs
38	O-ring			99412727	2	pcs
44b	Inlet part			98814593	1	pcs
+ 44a	Inlet part cpl.			98818922	1	pcs
47a	Bearing ring			96538795	1	pcs
- 49	Impeller cpl.			98394459	1	pcs
49c	Wear ring			96547340	1	
- 51	Shaft, spline, cpl.			98368626	1	pcs
62	Retaining ring			96588022	1	
55	Outer sleeve			98812632	1	pcs
56	Base plate			98481136	1	pcs
60	Spring			96538963	4	pcs
64d	Spacing bush			96538947	1	pcs
64c	Spacer			97980241	1	pcs
64b	Spacing bush		Length (mm): 5.00	96535098	1	pcs
64a	Spacing pipe		Internal diameter: 17,5	98417487	1	pcs
			Length (mm): 17			
64	Spacing pipe		Length (mm): 29.05	96535101	1	pcs
66	Wedge lock washer			96536157	1	pcs
66	Wedge lock washer			92575609	1	pcs
67	Lock nut		Thread: M8	98277008	1	pcs
76a	Rivet			96620489	1	pcs
105	Shaft seal		Material type: HQQE	96538914	1	pcs

Pos	Omschrijving	Opmerking tekst	Classificatie Gegevens	Onderdeelnr.	Aantal	Eenheid
440b	Lock ring			96536453	2	pcs