Inventflow: Grundfos A-partner

Grundfos CRN 20-14 A-P-A-E-HQQE

Find the pump here:
https://inventflow.nl/en/pompenfilter/crn/grundfos-crn-20-14-a-p-a-e-hqqe

Contact

info@inventflow.nl
+31 (0) 546 45 80 72

Datasheet

Qty.	Description
1	**CRN 20-14 A-P-A-E-HQQE**

Product No.: 96500567
Vertical, non-self-priming, multistage, in-line, centrifugal pump for installation in pipe systems and mounting on a foundation.

The pump has the following characteristics:
- Impellers, intermediate chambers and outer sleeve are made of

Impeller: Stainless steel, EN 1.4401.
- Pump head cover and base are made of

Pump housing: Stainless steel, EN 1.4408.
- The shaft seal has assembly length according to EN 12756.
- Power transmission is via cast iron split coupling.

Flange standard: - Pipework connection is via PJE flanges/couplings.

Phase: The motor is a 3-phase AC motor.

Controls:
Frequency converter: NONE

Liquid:
Pumped liquid: Water
Liquid temperature range: -20 .. 120 °C
Selected liquid temperature: 20 °C
Density: 998.2 kg/m³

Technical:
Pump speed on which pump data are based: 2923 rpm
Rated flow: 21 m³/h
Rated head: 165.4 m
Pump orientation: Vertical
Shaft seal arrangement: Single
Code for shaft seal: HQQE
Approvals on nameplate: CE,EAC,UKCA,WRAS,ACS
Curve tolerance: ISO9906:2012 3B

Materials:
Base: Stainless steel
EN 1.4408
AISI 316
Impeller: Stainless steel
EN 1.4401
AISI 316
Bearing: SIC

Installation:
Maximum ambient temperature: 60 °C
Maximum operating pressure: 25 bar
Max pressure at stated temp: 25 bar / 120 °C
25 bar / -20 °C
Type of connection: PJE

Qty.	Description	
	Size of inlet connection:	DN 50
	Size of outlet connection:	DN 50
	Pressure rating for connection:	PN 50
	Flange size for motor:	FF300
	Electrical data:	
	Motor standard:	IEC
	Motor type:	160MD
	IE Efficiency class:	IE3
	Rated power - P2:	15 kW
	Power (P2) required by pump:	15 kW
	Mains frequency:	50 Hz
	Rated voltage:	3 x 380-415D/660-690Y V
	Rated current:	28,0-26,0/16,2-15,6 A
	Starting current:	660-780 %
	Cos phi - power factor:	0.89-0.87
	Rated speed:	2930-2950 rpm
	Efficiency:	IE3 91,9%
	Motor efficiency at full load:	91.9-91.9 %
	Motor efficiency at 3/4 load:	92.4 %
	Motor efficiency at 1/2 load:	92.4 %
	Number of poles:	2
	Enclosure class (IEC 34-5):	55 Dust/Jetting
	Insulation class (IEC 85):	F
	Motor No:	85U17526
	Others:	
	Minimum efficiency index, MEI ≥:	0.70
	Net weight:	161 kg
	Gross weight:	192 kg
	Shipping volume:	0.619 m³
	Danish VVS No.:	385915140
	Country of origin:	HU
	Custom tariff no.:	84137075

96500567 CRN 20-14 A-P-A-E-HQQE 50 Hz

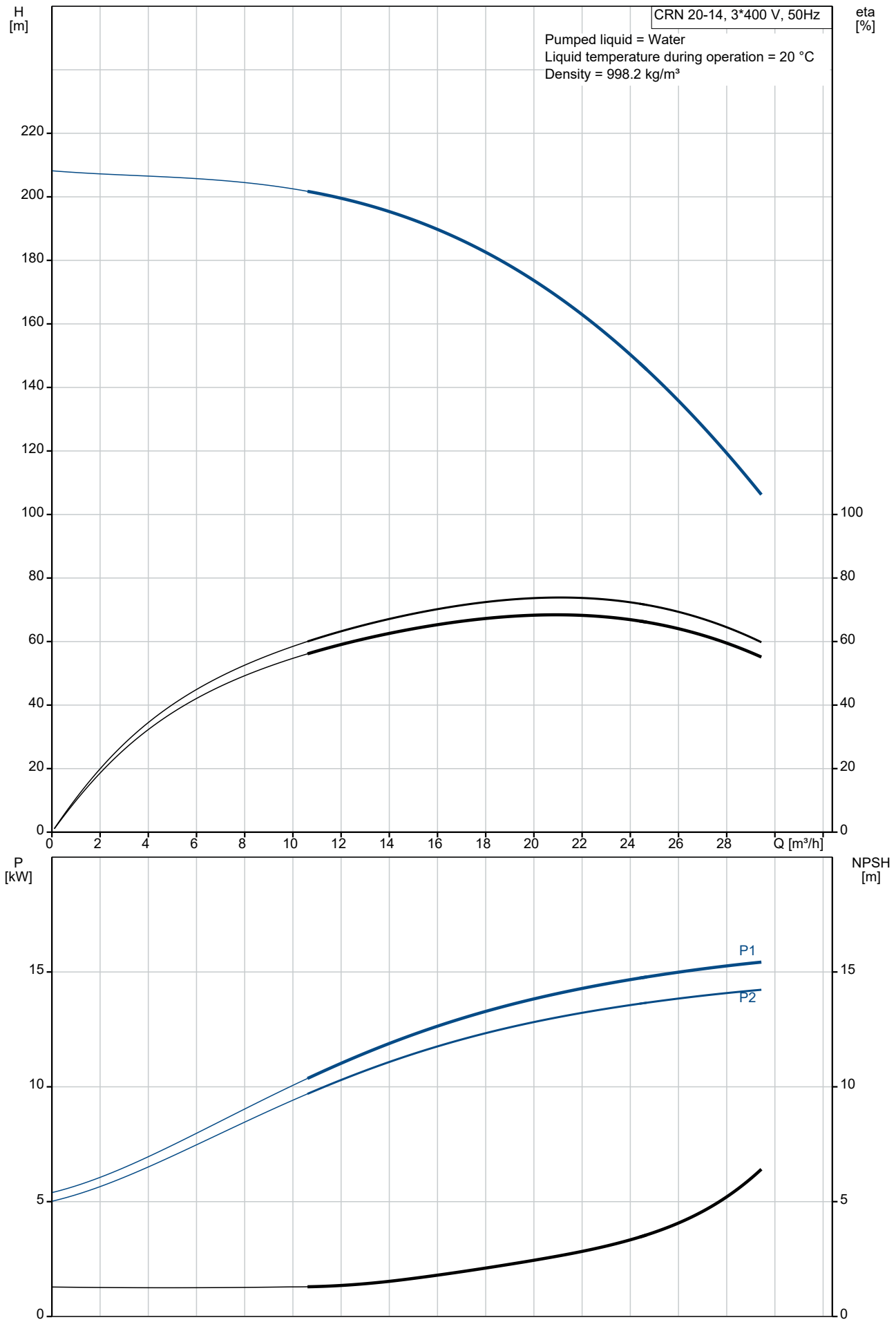

Description	Value
General information:	
Product name:	CRN 20-14 A-P-A-E-HQQE
Product No:	96500567
EAN number:	5700396204406
Technical:	
Pump speed on which pump data are based:	2923 rpm
Rated flow:	21 m³/h
Rated head:	165.4 m
Maximum head:	207 m
Stages:	14
Impellers:	14
Number of reduced-diameter impellers:	0
Low NPSH:	N
Pump orientation:	Vertical
Shaft seal arrangement:	Single
Code for shaft seal:	HQQE
Approvals on nameplate:	CE,EAC,UKCA,WRAS,ACS
Curve tolerance:	ISO9906:2012 3B
Pump version:	A
Model:	A
Materials:	
Base:	Stainless steel
Base:	EN 1.4408
Base:	AISI 316
Impeller:	Stainless steel
Impeller:	EN 1.4401
Impeller:	AISI 316
Material code:	A
Code for rubber:	E
Bearing:	SIC
Installation:	
Maximum ambient temperature:	60 °C
Maximum operating pressure:	25 bar
Max pressure at stated temp:	25 bar / 120 °C
Max pressure at stated temp:	25 bar / -20 °C
Type of connection:	PJE
Size of inlet connection:	DN 50
Size of outlet connection:	DN 50
Pressure rating for connection:	PN 50
Flange size for motor:	FF300
Connect code:	P
Liquid:	
Pumped liquid:	Water
Liquid temperature range:	-20 .. 120 °C
Selected liquid temperature:	20 °C
Density:	998.2 kg/m³
Electrical data:	
Motor standard:	IEC
Motor type:	160MD
IE Efficiency class:	IE3
Rated power - P2:	15 kW
Power (P2) required by pump:	15 kW
Mains frequency:	50 Hz
Rated voltage:	3 x 380-415D/660-690Y V
Rated current:	28,0-26,0/16,2-15,6 A
Starting current:	660-780 %
Cos phi - power factor:	0.89-0.87
Rated speed:	2930-2950 rpm
Efficiency:	IE3 91,9%
Motor efficiency at full load:	91.9-91.9 %
Motor efficiency at 3/4 load:	92.4 %

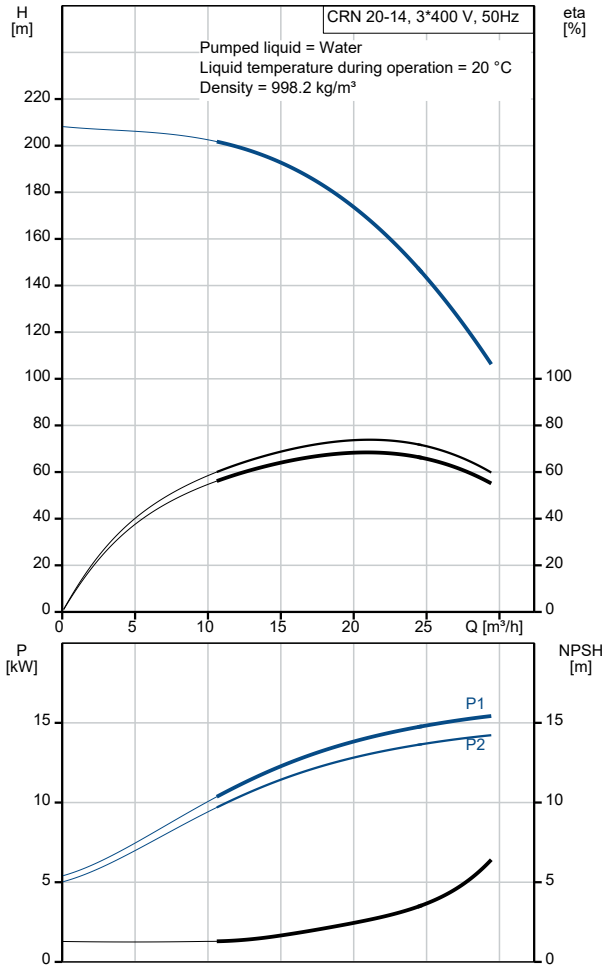

Description	Value
Motor efficiency at 1/2 load:	92.4 %
Number of poles:	2
Enclosure class (IEC 34-5):	55 Dust/Jetting
Insulation class (IEC 85):	F
Motor protec:	PTC
Motor No:	85U17526
Controls:	
Frequency converter:	NONE
Others:	
Minimum efficiency index, MEI ≥:	0.70
Net weight:	161 kg
Gross weight:	192 kg
Shipping volume:	0.619 m^3
Danish VVS No.:	385915140
Country of origin:	HU
Custom tariff no.:	84137075

96500567 CRN 20-14 A-P-A-E-HQQE 50 Hz

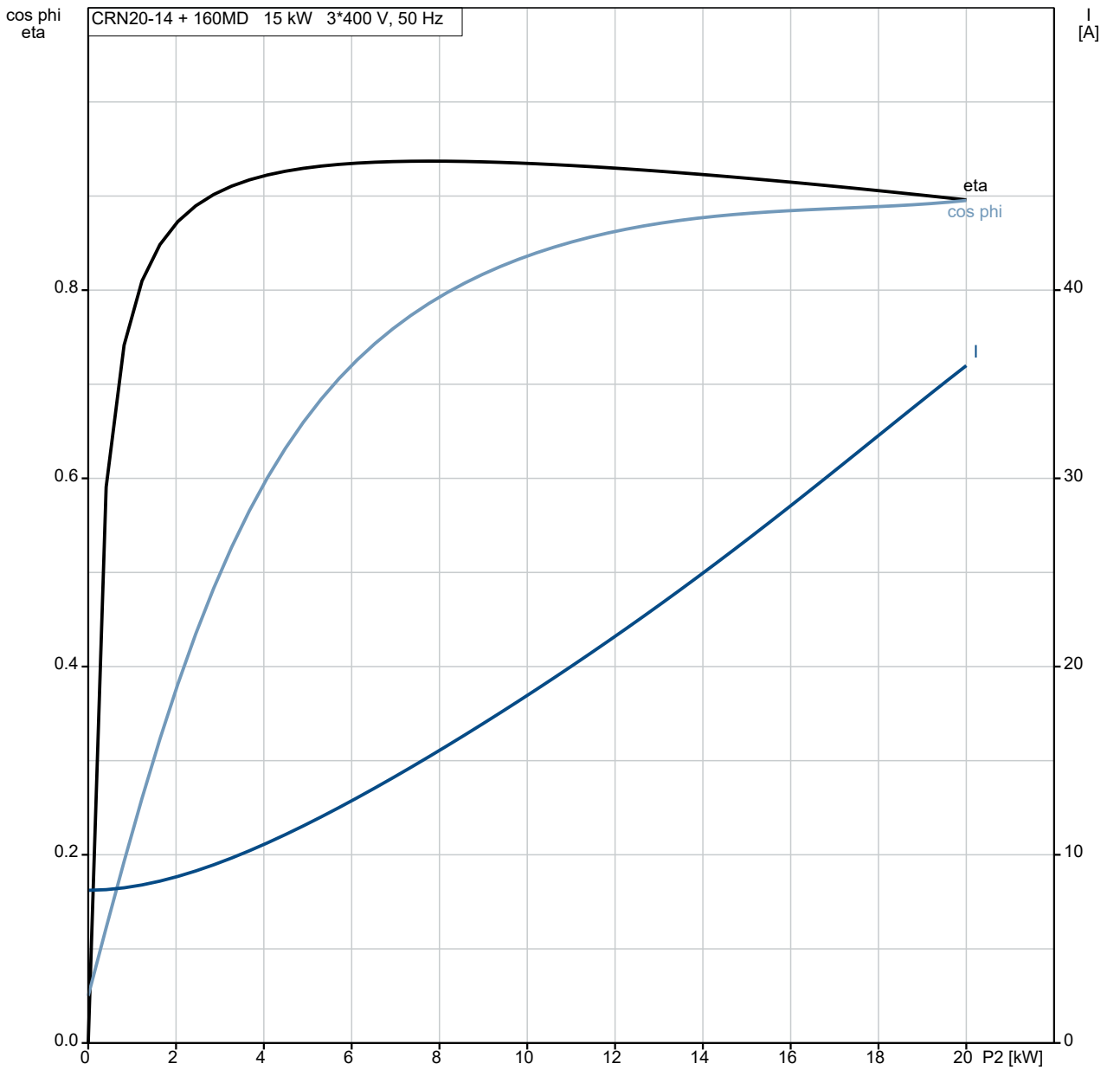

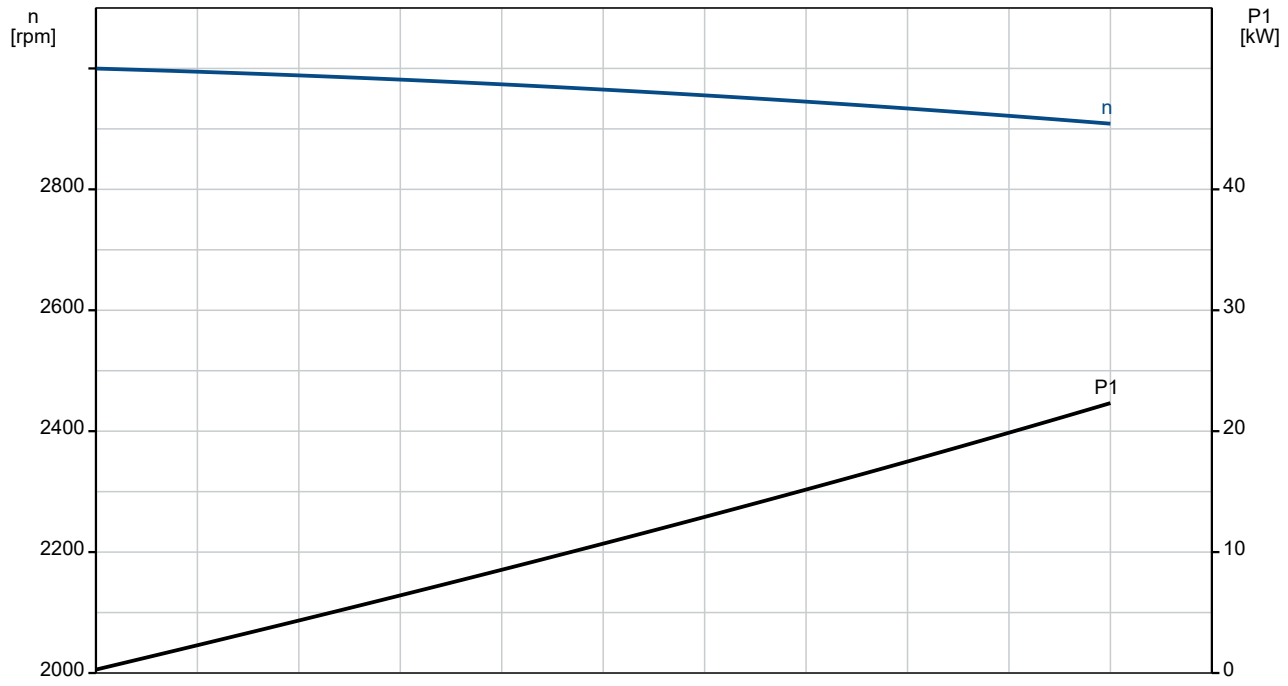

96500567 CRN 20-14 A-P-A-E-HQQE 50 Hz

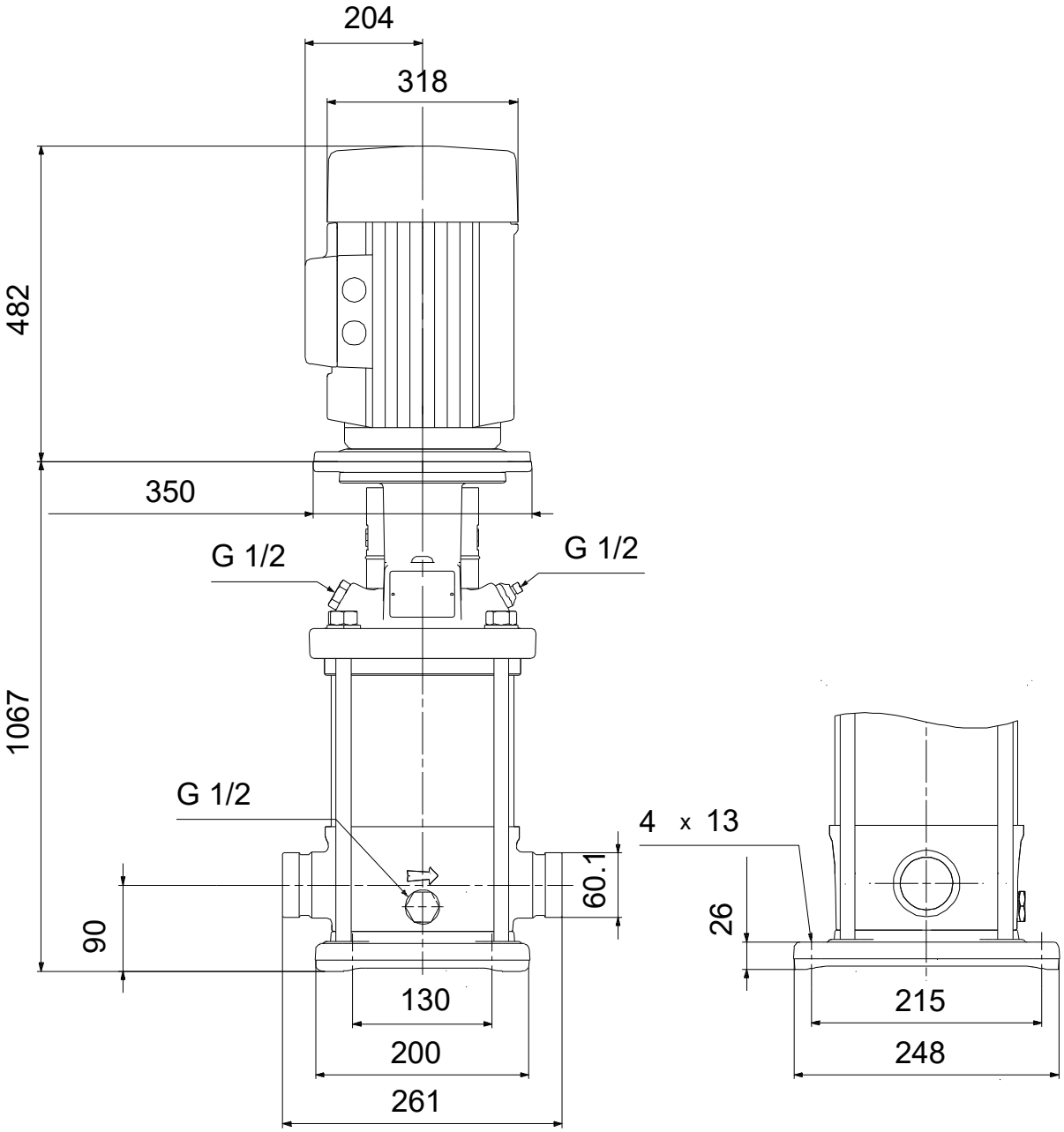

Note! All units are in [mm] unless others are stated.
Disclaimer: This simplified dimensional drawing does not show all details.

Spare parts CRN 20-14, Product No. 96500567
Produced After 1101 (production year and week number)

	Pos	Omschrijving	Opmerking tekst	Classificatie Gegevens	Onderdeelnr.	Aantal	Eenheid
-		Kit, chamber stack			96491794	1	pcs
-	80	Chamber stack				1	
-	3	Top intermediate chamber					1
		Guide vane					
		Cover plate					
	3	Intermediate chamber					
-	4a	Intermediate chamber cpl.					3
		Sand Lifter					
		Guide cup					
		Bearing plate					
		Guide vane					
	3	Intermediate chamber					
	45	Neck ring cpl.					
	47	Bearing bush					
	65	Retainer					
-	4	Intermediate chamber cpl.					10
	3	Intermediate chamber					
	45	Neck ring cpl.					
	65	Retainer					
	26a	Strap cpl.		Length (mm): 629MM			2
	26.c	Washer		Designation: DIN 125A			2
				Thickness: 1,6			
	26.b	Hex head screw					2
	44b	Inlet part					1
-	44a	Inlet part cpl.					1
	45	Neck ring cpl.					
	65	Retainer					
	47a	Bearing ring					3
-	49	Impeller cpl.					14
	49c	Wear ring					
	49	Impeller					
-	51	Shaft, spline, cpl.					1
		Bar					
	62	Stop ring					
	64d	Spacing bush					3
	64c	Spacer					1
	64a	Spacing pipe		Internal diameter: 17,5			3
				Length (mm): 17			
	64	Spacing pipe		Length (mm): 43.6			10
	66	Wedge lock washer					1
	67	Lock nut		Thread: M8			1
	69	Spacing bush					1
-		Kit, coupling			96511352	1	pcs
		Adjusting fork				1	
-	8	Coupling				1	
	9	Hex socket head cap screw		Designation: DIN 912			4
				Length (mm): 25			
				Thread: M10			
	10a	Coupling half					2
	10	Shaft pin		Diameter: 5			1
				Length (mm): 26			
-		Kit, coupling guard			96509614	1	pcs
	7.a	Combi Slot Torx screw				4	
	7	Coupling guard				2	
-		Kit, gaskets			96509609	1	pcs
		Gasket				2	
	24	O-ring				2	
	37	O-ring				2	
	38	O-ring				1	

	Pos	Omschrijving	Opmerking tekst	Classificatie Gegevens	Onderdeelnr.	Aantal	Eenheid
	38	O-ring				1	
	38	O-ring				2	
	60	Spring				4	
	415	Gasket		Internal diameter: 44		2	
				Outer diameter: 60			
				Thickness: 2			
	441b	Gasket		Internal diameter: 49		2	
				Outer diameter: 92			
				Thickness: 2			
-		Kit, plug			96511312	1	pcs
-	18	Air vent screw				1	
		Spindle					1
		Plug					1
	25a	Drain plug				1	
	25	Plug				1	
	38	O-ring				1	
	38	O-ring				1	
	38	O-ring				2	
	38	O-ring		Diameter: 5,3		1	
				Material type: FKM			
				Thickness: 2,4			
	38	O-ring		Diameter: 16,3		1	
				Material type: FKM			
				Thickness: 2,4			
	38	O-ring		Diameter: 16,3		2	
				Material type: FKM			
				Thickness: 2,4			
-		Kit, shaft seal HQQE			96511844	1	pcs
	105	Shaft seal		Material type: HQQE		1	
-		Kit, wear parts			96511830	1	pcs
-	4a	Intermediate chamber cpl.				3	
		Sand Lifter					1
		Guide cup					1
		Bearing plate					1
		Guide vane					10
	3	Intermediate chamber					1
	45	Neck ring cpl.					1
	47	Bearing bush					1
	65	Retainer					1
	26.c	Washer		Designation: DIN 125A		2	
				Thickness: 1,6			
	26.b	Hex head screw				2	
	45	Neck ring cpl.				14	
	47a	Bearing ring				3	
	49c	Wear ring				17	
	62	Retaining ring				1	
	64d	Spacing bush				3	
	64c	Spacer				1	
	64b	Spacing bush		Length (mm): 5.00		1	
	64a	Spacing pipe		Internal diameter: 17,5		3	
				Length (mm): 17			
	65	Retainer				14	
	66	Wedge lock washer				1	
	67	Lock nut		Thread: M8		1	
-		Motor				1	pcs
+		Kit, bearing cpl.			96796676	1	
-		Kit, bearing plate			96796664	1	
	155.a	Bearing cover					1
	208a	Gasket					3
	208	Hex socket head cap screw		Designation: DIN912			3
				Length (mm): 40			
				Thread: M5			
-		Kit, eyebolt			96796712	1	
	189	Eyebolt					2

Pos	Omschrijving	Opmerking tekst	Classificatie Gegevens	Onderdeelnr.	Aantal	Eenheid
-	Kit, fan			96796654	1	
156.c	Retaining ring				1	
156	Fan				1	
-	Kit, fan cover			96796647	1	
151	Fan cover				1	
152.a	Rubber bush				4	
152	Hex head cap screw				4	
196	Diaphragm				1	
-	Kit, flange			96796662	1	
156.b	Flange				1	
159.b	Seal ring				1	
185.b	Nut				4	
185	Hex socket head cap screw				4	
186	Drain plug				4	
195.a	Grease nipple				1	
-	Kit, gaskets			96798508	1	
184	O-ring		Diameter: 235		2	
-	Kit, lubrication nipple			96796671	1	
195.b	Grease nipple				2	
195.a	Grease nipple				1	
-	Kit, ND-end shield cpl.			96796669	1	
32b	Waved washer				1	
156.a	End shield NDE				1	
157	O-ring				1	
159	V-ring				1	
185.c	Nut				4	
185.a	Hex socket head cap screw				4	
195.b	Grease nipple				1	
-	Kit, shaft seal			96843459	1	
159.b	V-ring				1	
159	V-ring				1	
-	Kit, terminal board			96796657	1	
	Terminal connection				3	
	Washer				12	
36	Hex nut				12	
173	Torx Screw				1	
176.d	Terminal board				1	
176	Terminal board				1	
177	Torx Screw				1	
-	Kit, terminal box cover			96796659	1	
164	Terminal box cover				1	
273a	Pan head thread forming screw				4	
-	Motor				1	pcs
+	Kit, bearing cpl.			96796676	1	
-	Kit, bearing plate			96796664	1	
155.a	Bearing cover				1	
208a	Gasket				3	
208	Hex socket head cap screw		Designation: DIN912		3	
			Length (mm): 40			
			Thread: M5			
-	Kit, eyebolt			96796712	1	
189	Eyebolt				2	
-	Kit, fan			96796654	1	
156.c	Retaining ring				1	
156	Fan				1	
-	Kit, fan cover			96796647	1	
151	Fan cover				1	
152.a	Rubber bush				4	
152	Hex head cap screw				4	
196	Diaphragm				1	
-	Kit, flange			96796662	1	
156.b	Flange				1	
159.b	Seal ring				1	
185.b	Nut				4	

	Pos	Omschrijving	Opmerking tekst	Classificatie Gegevens	Onderdeelnr.	Aantal	Eenheid
	185	Hex socket head cap screw				4	
	186	Drain plug				4	
	195.a	Grease nipple				1	
-		Kit, gaskets			96798508	1	
	184	O-ring		Diameter: 235		2	
-		Kit, lubrication nipple			96796671	1	
	195.b	Grease nipple				2	
	195.a	Grease nipple				1	
-		Kit, ND-end shield cpl.			96796669	1	
	32b	Waved washer				1	
	156.a	End shield NDE				1	
	157	O-ring				1	
	159	V-ring				1	
	185.c	Nut				4	
	185.a	Hex socket head cap screw				4	
	195.b	Grease nipple				1	
-		Kit, shaft seal			96843459	1	
	159.b	V-ring				1	
	159	V-ring				1	
-		Kit, terminal board			96796657	1	
		Terminal connection				3	
		Washer				12	
	36	Hex nut				12	
	173	Torx Screw				1	
	176.d	Terminal board				1	
	176	Terminal board				1	
	177	Torx Screw				1	
-		Kit, terminal box cover			96796659	1	
	164	Terminal box cover				1	
	273a	Pan head thread forming screw				4	
	1a	Pump head			98998053	1	pcs
	1	Flange			98913788	1	pcs
	2	Pump cover			98481138	1	pcs
+	3	Top intermediate chamber			98734577	1	pcs
+	4a	Intermediate chamber cpl.			96538853	3	pcs
+	4a	Intermediate chamber cpl.			98371117	3	pcs
-	4	Intermediate chamber cpl.			96538840	10	pcs
	3	Intermediate chamber			98371143	1	
	65	Retainer			96547341	1	
+	4	Intermediate chamber cpl.			98371115	10	pcs
	6	Base			98654159	1	pcs
	10	Shaft pin		Diameter: 5	96536473	1	pcs
				Length (mm): 26			
	10	Shaft pin		Diameter: 5	96587588	1	pcs
				Length (mm): 26			
+	18	Air vent screw			96547461	1	pcs
+	18	Air vent screw			95061351	1	pcs
	25	Plug			96536013	1	pcs
	26a	Strap cpl.		Length (mm): 629MM	98984433	2	pcs
	26.c	Washer		Designation: DIN 125A	99262704	2	pcs
				Thickness: 1,6			
	26.c	Washer		Designation: DIN 125A	99886930	2	pcs
				Thickness: 1,6			
	26	Staybolt			98982889	4	pcs
	28	Hex head screw		Length (mm): 25	99522923	4	pcs
				Thread: M12			
	32	Washer		Designation: DIN 125 A2	99944260	4	pcs
				Internal diameter: 17			
				Outer diameter: 30			
				Thickness: 3			
	36	Nut		Thread: M16	99944257	4	pcs
	36	Hex nut		Thread: M16	96620480	4	pcs
	37.a	O-ring			96538857	1	pcs
	38	O-ring			99198791	1	pcs

	Pos	Omschrijving	Opmerking tekst	Classificatie Gegevens	Onderdeelnr.	Aantal	Eenheid
	38	O-ring			99198815	2	pcs
	38	O-ring			99412727	2	pcs
	44b	Inlet part			98814593	1	pcs
+	44a	Inlet part cpl.			98818922	1	pcs
	47a	Bearing ring			96538795	3	pcs
-	49	Impeller cpl.			98394459	14	pcs
	49c	Wear ring			96547340	1	
+	51	Shaft, spline, cpl.			98368645	1	pcs
	55	Outer sleeve			98812648	1	pcs
	56	Base plate			98481136	1	pcs
	60	Spring			96538963	4	pcs
	64d	Spacing bush			96538947	3	pcs
	64c	Spacer			97980241	1	pcs
	64a	Spacing pipe		Internal diameter: 17,5	98417487	3	pcs
				Length (mm): 17			
	64	Spacing pipe		Length (mm): 43.6	96535107	10	pcs
	66	Wedge lock washer			96536157	1	pcs
	66	Wedge lock washer			92575609	1	pcs
	67	Lock nut		Thread: M8	98277008	1	pcs
	69	Spacing bush			96538949	1	pcs
	76a	Rivet			96620489	1	pcs
	105	Shaft seal		Material type: HQQE	96538914	1	pcs