Inventflow: Grundfos A-partner

Grundfos CRN 10-16 A-FGJ-A-E-HQQE

Find the pump here:
https://inventflow.nl/en/pompenfilter/crn/grundfos-crn-10-16-a-fgj-a-e-hqqe

Contact

info@inventflow.nl
+31 (0) 546 45 80 72

Datasheet

Qty.	Description
1	**CRN 10-16 A-FGJ-A-E-HQQE**

Product No.: 96501297
Vertical, non-self-priming, multistage, in-line, centrifugal pump for installation in pipe systems and mounting on a foundation.

The pump has the following characteristics:
- Impellers, intermediate chambers and outer sleeve are made of

Impeller: Stainless steel, EN 1.4401.
- Pump head cover and base are made of

Pump housing: Stainless steel, EN 1.4408.
- The shaft seal has assembly length according to EN 12756.
- Power transmission is via cast iron split coupling.

Flange standard: - Pipework connection is via DIN / ANSI / JIS flanges/couplings.

Phase: The motor is a 3-phase AC motor.

Controls:
Frequency converter: NONE

Liquid:
Pumped liquid: Water
Liquid temperature range: -20 .. 120 °C
Selected liquid temperature: 20 °C
Density: 998.2 kg/m³

Technical:
Pump speed on which pump data are based: 2919 rpm
Rated flow: 10 m³/h
Rated head: 129.4 m
Pump orientation: Vertical
Shaft seal arrangement: Single
Code for shaft seal: HQQE
Approvals on nameplate: CE,EAC,UKCA,WRAS,ACS
Curve tolerance: ISO9906:2012 3B

Materials:
Base: Stainless steel
EN 1.4408
AISI 316
Impeller: Stainless steel
EN 1.4401
AISI 316
Bearing: SIC

Installation:
Maximum ambient temperature: 60 °C
Maximum operating pressure: 25 bar
Max pressure at stated temp: 25 bar / 120 °C
25 bar / -20 °C
Type of connection: DIN / ANSI / JIS

Qty.	Description	
	Size of inlet connection:	DN 40
	Size of outlet connection:	DN 40
	Pressure rating for connection:	PN 25
	Flange rating inlet:	300 lb
	Flange size for motor:	FF265
	Electrical data:	
	Motor standard:	IEC
	Motor type:	132SC
	IE Efficiency class:	IE3
	Rated power - P2:	5.5 kW
	Power (P2) required by pump:	5.5 kW
	Mains frequency:	50 Hz
	Rated voltage:	3 x 380-415D V
	Rated current:	11 A
	Starting current:	1080-1180 %
	Cos phi - power factor:	0.87-0.82
	Rated speed:	2920-2940 rpm
	Efficiency:	IE3 89,2%
	Motor efficiency at full load:	89.2 %
	Motor efficiency at 3/4 load:	90.0 %
	Motor efficiency at 1/2 load:	89.6 %
	Number of poles:	2
	Enclosure class (IEC 34-5):	55 Dust/Jetting
	Insulation class (IEC 85):	F
	Motor No:	85U17417
	Others:	
	Minimum efficiency index, MEI ≥:	0.70
	Net weight:	96 kg
	Gross weight:	118 kg
	Shipping volume:	0.321 m³
	Country of origin:	HU
	Custom tariff no.:	84137075

96501297 CRN 10-16 A-FGJ-A-E-HQQE 50 Hz

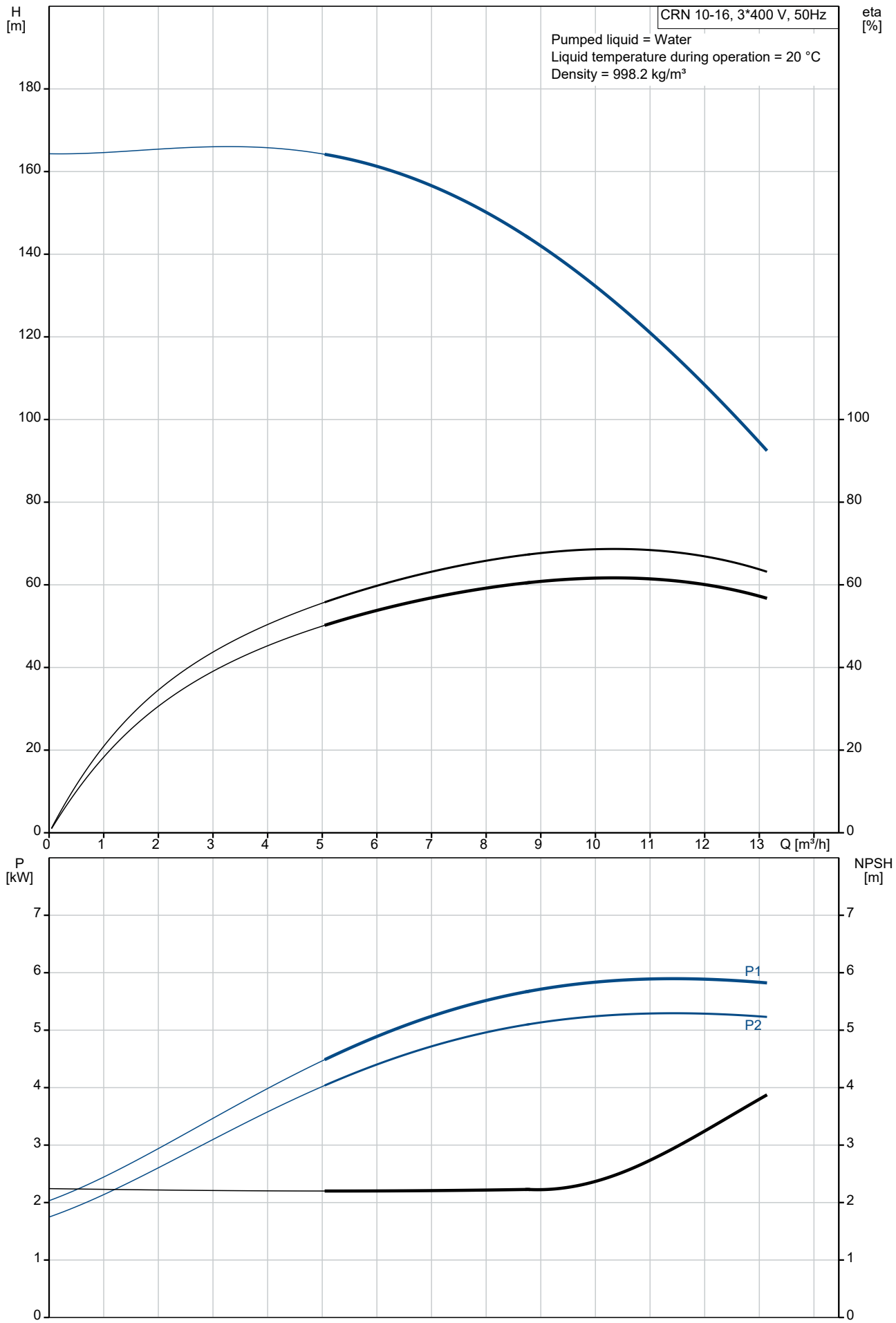

Description	Value
General information:	
Product name:	CRN 10-16 A-FGJ-A-E-HQQE
Product No:	96501297
EAN number:	5700396219295
Technical:	
Pump speed on which pump data are based:	2919 rpm
Rated flow:	10 m³/h
Rated head:	129.4 m
Maximum head:	163 m
Stages:	16
Impellers:	16
Number of reduced-diameter impellers:	0
Low NPSH:	N
Pump orientation:	Vertical
Shaft seal arrangement:	Single
Code for shaft seal:	HQQE
Approvals on nameplate:	CE,EAC,UKCA,WRAS,ACS
Curve tolerance:	ISO9906:2012 3B
Pump version:	A
Model:	A
Materials:	
Base:	Stainless steel
Base:	EN 1.4408
Base:	AISI 316
Impeller:	Stainless steel
Impeller:	EN 1.4401
Impeller:	AISI 316
Material code:	A
Code for rubber:	E
Bearing:	SIC
Installation:	
Maximum ambient temperature:	60 °C
Maximum operating pressure:	25 bar
Max pressure at stated temp:	25 bar / 120 °C
Max pressure at stated temp:	25 bar / -20 °C
Type of connection:	DIN / ANSI / JIS
Size of inlet connection:	DN 40
Size of outlet connection:	DN 40
Pressure rating for connection:	PN 25
Flange rating inlet:	300 lb
Flange size for motor:	FF265
Connect code:	FGJ
Liquid:	
Pumped liquid:	Water
Liquid temperature range:	-20 .. 120 °C
Selected liquid temperature:	20 °C
Density:	998.2 kg/m³
Electrical data:	
Motor standard:	IEC
Motor type:	132SC
IE Efficiency class:	IE3
Rated power - P2:	5.5 kW
Power (P2) required by pump:	5.5 kW
Mains frequency:	50 Hz
Rated voltage:	3 x 380-415D V
Rated current:	11 A
Starting current:	1080-1180 %
Cos phi - power factor:	0.87-0.82
Rated speed:	2920-2940 rpm
Efficiency:	IE3 89,2%
Motor efficiency at full load:	89.2 %
Motor efficiency at 3/4 load:	90.0 %

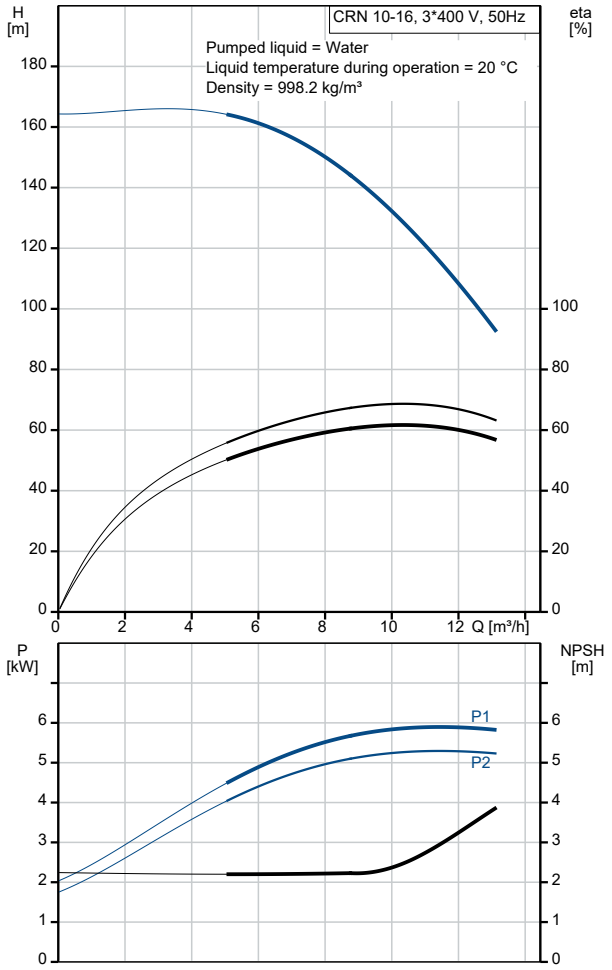

Description	Value
Motor efficiency at 1/2 load:	89.6 %
Number of poles:	2
Enclosure class (IEC 34-5):	55 Dust/Jetting
Insulation class (IEC 85):	F
Motor protec:	PTC
Motor No:	85U17417
Controls:	
Frequency converter:	NONE
Others:	
Minimum efficiency index, MEI ≥:	0.70
Net weight:	96 kg
Gross weight:	118 kg
Shipping volume:	0.321 m^3
Country of origin:	HU
Custom tariff no.:	84137075

96501297 CRN 10-16 A-FGJ-A-E-HQQE 50 Hz

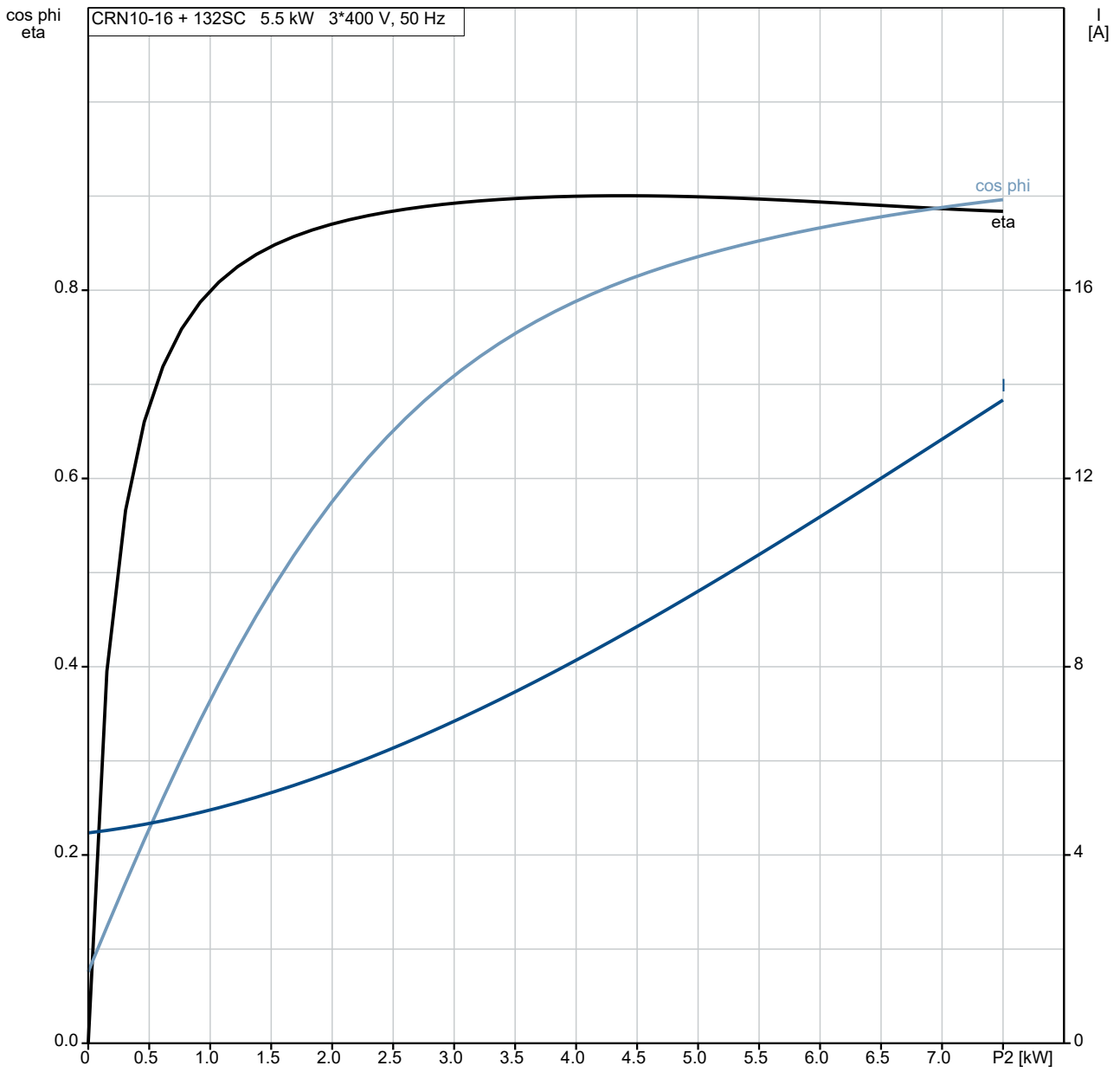

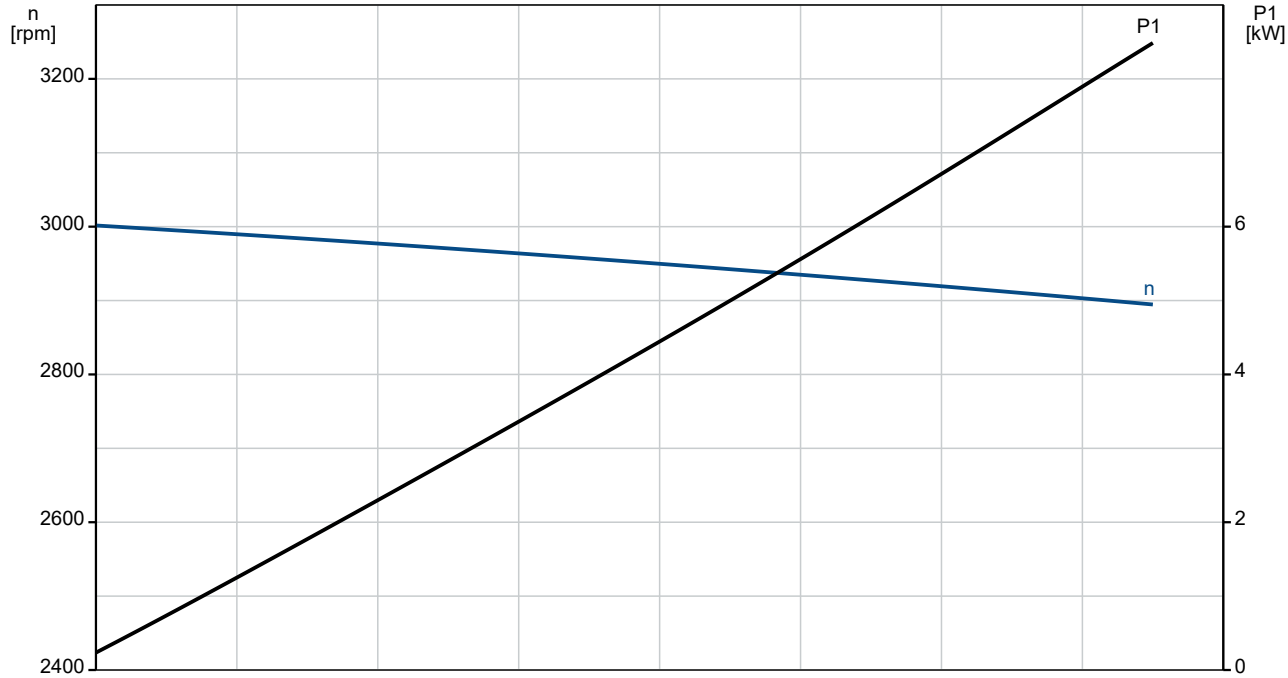

96501297 CRN 10-16 A-FGJ-A-E-HQQE 50 Hz

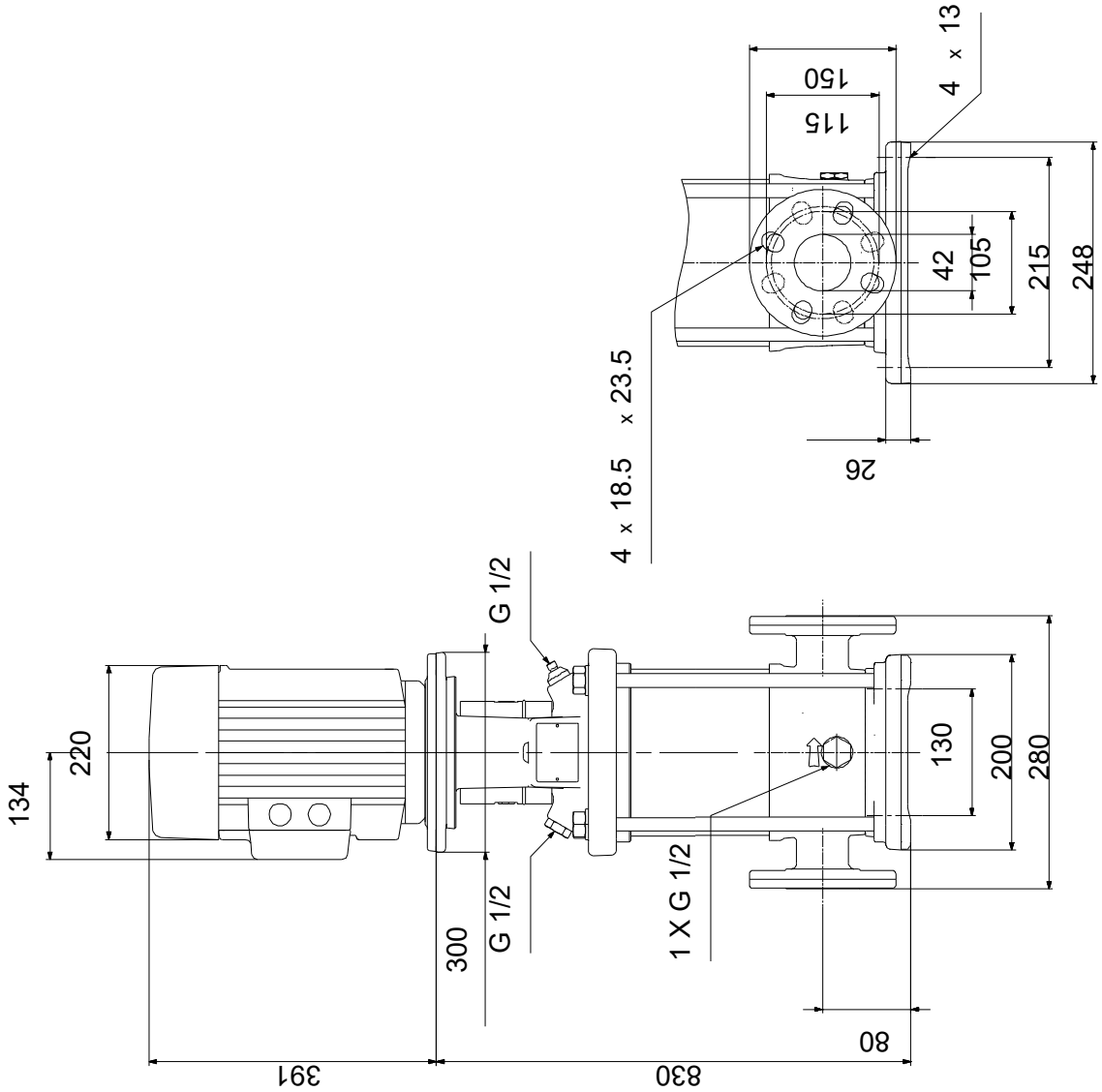

Note! All units are in [mm] unless others are stated.
Disclaimer: This simplified dimensional drawing does not show all details.

Spare parts CRN 10-16, Product No. 96501297
Produced After 1101 (production year and week number)

	Pos	Omschrijving	Opmerking tekst	Classificatie Gegevens	Onderdeelnr.	Aantal	Eenheid
-		Kit, chamber stack			96491732	1	pcs
-	80	Chamber stack				1	
-	3	Top intermediate chamber					1
		Guide vane					
		Cover plate					
	3	Top intermediate chamber					
-	4a	Intermediate chamber cpl.					3
		Sand Lifter					
		Guide cup					
		Bearing plate					
		Guide vane					
	3	Intermediate chamber					
	45	Neck ring cpl.					
	47	Bearing bush					
	65	Retainer					
-	4	Intermediate chamber cpl.					12
		Sand Lifter					
		Guide cup					
		Guide vane					
		Cover plate					
	3	Intermediate chamber					
	45	Neck ring cpl.					
	65	Retainer					
	26a	Strap cpl.					2
	26.c	Washer		Designation: DIN 125A			2
				Thickness: 1,6			
	26.b	Hex head screw					2
	44b	Inlet part					1
-	44a	Inlet part cpl.					1
		Inlet part					
	45	Neck ring cpl.					
	65	Retainer					
	47a	Bearing ring					3
	49	Impeller cpl.					16
-	51	Shaft, spline, cpl.					1
		Bar					
	62	Stop ring					
	64c	Spacer					1
	64a	Spacing bush		Length (mm): 9.00			3
	64.d	Spacer					3
	64	Spacing pipe		Length (mm): 29.05			12
	66	Wedge lock washer					1
	67	Lock nut		Thread: M8			1
	69	Spacing bush		Length (mm): 18.00			1
-		Kit, coupling			96511351	1	pcs
		Adjusting fork				1	
-	8	Coupling				1	
	9	Hex socket head cap screw		Designation: DIN 912			4
				Length (mm): 25			
				Thread: M10			
	10a	Coupling half					1
	10	Shaft pin		Diameter: 5			1
				Length (mm): 26			
-		Kit, coupling guard			96509613	1	pcs
	7.a	Combi Slot Torx screw				4	
	7	Coupling guard				2	
-		Kit, gaskets			96509609	1	pcs
		Gasket				2	
	24	O-ring				2	

Pos	Omschrijving	Opmerking tekst	Classificatie Gegevens	Onderdeelnr.	Aantal	Eenheid
37	O-ring				2	
38	O-ring				1	
38	O-ring				1	
38	O-ring				2	
60	Spring				4	
415	Gasket		Internal diameter: 44		2	
			Outer diameter: 60			
			Thickness: 2			
441b	Gasket		Internal diameter: 49		2	
			Outer diameter: 92			
			Thickness: 2			
-	Kit, plug			96511312	1	pcs
- 18	Air vent screw				1	
	Spindle					1
	Plug					1
25a	Drain plug				1	
25	Plug				1	
38	O-ring				1	
38	O-ring				1	
38	O-ring				2	
38	O-ring		Diameter: 5,3		1	
			Material type: FKM			
			Thickness: 2,4			
38	O-ring		Diameter: 16,3		1	
			Material type: FKM			
			Thickness: 2,4			
38	O-ring		Diameter: 16,3		2	
			Material type: FKM			
			Thickness: 2,4			
-	Kit, shaft seal HQQE			96511844	1	pcs
105	Shaft seal		Material type: HQQE		1	
-	Kit, wear parts			96511925	1	pcs
- 4a	Intermediate chamber cpl.				3	
	Sand Lifter					1
	Guide cup					1
	Bearing plate					1
	Guide vane					10
3	Intermediate chamber					1
45	Neck ring cpl.					1
47	Bearing bush					1
65	Retainer					1
26.c	Washer		Designation: DIN 125A		2	
			Thickness: 1,6			
26.b	Hex head screw				2	
45	Neck ring cpl.				19	
47a	Bearing ring				3	
62	Retaining ring				1	
64c	Spacer				1	
64a	Spacing bush		Length (mm): 9.00		3	
64.d	Spacer				3	
65	Retainer				19	
66	Wedge lock washer				1	
67	Lock nut		Thread: M8		1	
-	Motor				1	pcs
-	Kit, bearing cpl.			96279803	1	
111	Ball bearing		Designation: 6206.2Z.C3.SYN			1
153	Angular-contact bearing					1
157	O-ring		Diameter: 62			1
			Material type: NBR			
			Thickness: 3			
158	Waved washer					2
-	Kit, end shield			96279790	1	
156a	End shield					1

Pos	Omschrijving	Opmerking tekst	Classificatie Gegevens	Onderdeelnr.	Aantal	Eenheid
157	O-ring		Diameter: 62			1
			Material type: NBR			
			Thickness: 3			
158	Waved washer					1
159a	Seal ring					1
-	Kit, eyebolt			96279825	1	
189	Eyebolt					1
-	Kit, fan			96279758	1	
156	Fan					1
159c	Seal ring					1
159a	Seal ring					1
-	Kit, fan cover			96279756	1	
151b	Label					1
151	Fan cover					1
152	Pan head thread forming screw					4
-	Kit, flange			96279784	1	
156b	Flange					1
159.c	Seal ring					1
186	Drain plug					3
-	Kit, retaining ring			96279801	1	
187	Retaining ring					1
188	Retaining ring					1
-	Kit, shaft seal			96279764	1	
159d	Seal ring					1
159c	Seal ring					1
-	Kit, staybolts			96279793	1	
181	Pan head staybolt					4
-	Kit, terminal board			96279769	1	
	Bracket cpl.					1
163	Hex socket head screw					1
173a	Base					1
173	Pan head thread forming screw		Designation: COMBI TORX T25			1
176	Slot cheese head screw		Designation: COMBI TORX T25			6
			Length (mm): 10			
			Thread: M5			
176	Terminal					1
176	Connecting piece					3
176	Wire clamp					3
176	Terminal board					1
177	Pan head screw					1
-	Kit, terminal box			96279772	1	
164	Terminal box cover w/gasket					1
166	Pan head thread forming screw					4
-	Motor				1	pcs
-	Kit, bearing cpl.			96279803	1	
111	Ball bearing		Designation: 6206.2Z.C3.SYN			1
153	Angular-contact bearing					1
157	O-ring		Diameter: 62			1
			Material type: NBR			
			Thickness: 3			
158	Waved washer					2
-	Kit, end shield			96279790	1	
156a	End shield					1
157	O-ring		Diameter: 62			1

Pos	Omschrijving	Opmerking tekst	Classificatie Gegevens	Onderdeelnr.	Aantal	Eenheid
			Material type: NBR			
			Thickness: 3			
158	Waved washer				1	
159a	Seal ring				1	
-	Kit, eyebolt			96279825	1	
189	Eyebolt				1	
-	Kit, fan			96279758	1	
156	Fan				1	
159c	Seal ring				1	
159a	Seal ring				1	
-	Kit, fan cover			96279756	1	
151b	Label				1	
151	Fan cover				1	
152	Pan head thread forming screw				4	
-	Kit, flange			96279784	1	
156b	Flange				1	
159.c	Seal ring				1	
186	Drain plug				3	
-	Kit, retaining ring			96279801	1	
187	Retaining ring				1	
188	Retaining ring				1	
-	Kit, shaft seal			96279764	1	
159d	Seal ring				1	
159c	Seal ring				1	
-	Kit, staybolts			96279793	1	
181	Pan head staybolt				4	
-	Kit, terminal board			96279769	1	
	Bracket cpl.				1	
163	Hex socket head screw				1	
173a	Base				1	
173	Pan head thread forming screw		Designation: COMBI TORX T25		1	
176	Slot cheese head screw		Designation: COMBI TORX T25		6	
			Length (mm): 10			
			Thread: M5			
176	Terminal				1	
176	Connecting piece				3	
176	Wire clamp				3	
176	Terminal board				1	
177	Pan head screw				1	
-	Kit, terminal box			96279772	1	
164	Terminal box cover w/gasket				1	
166	Pan head thread forming screw				4	
1a	Pump head			98914854	1	pcs
1	Flange			99104283	1	pcs
2	Pump cover			98481138	1	pcs
3	Top intermediate chamber			98371084	1	pcs
4a	Intermediate chamber cpl.			96538854	3	pcs
4a	Intermediate chamber cpl.			98371088	3	pcs
- 4	Intermediate chamber cpl.			96538841	12	pcs
3	Intermediate chamber			98371064	1	
45	Neck ring cpl.			96538856	1	
4	Intermediate chamber cpl.			98371086	12	pcs
6	Base			98892305	1	pcs
10	Shaft pin		Diameter: 5	96536473	1	pcs
			Length (mm): 26			

Pos	Omschrijving	Opmerking tekst	Classificatie Gegevens	Onderdeelnr.	Aantal	Eenheid
10	Shaft pin		Diameter: 5	96587588	1	pcs
			Length (mm): 26			
18	Air vent screw			96547461	1	pcs
18	Air vent screw			95061351	1	pcs
25	Plug			96536013	1	pcs
26a	Strap cpl.			98969439	2	pcs
26.c	Washer		Designation: DIN 125A	99262704	2	pcs
			Thickness: 1,6			
26.c	Washer		Designation: DIN 125A	99886930	2	pcs
			Thickness: 1,6			
26	Staybolt			98982886	4	pcs
32	Washer		Designation: DIN 125 A2	99944260	4	pcs
			Internal diameter: 17			
			Outer diameter: 30			
			Thickness: 3			
36	Nut		Thread: M16	99944257	4	pcs
37a	O-ring			96538857	1	pcs
38	O-ring			99198791	1	pcs
38	O-ring			99198815	2	pcs
38	O-ring			99412727	2	pcs
44b	Inlet part			98814593	1	pcs
44a	Inlet part cpl.			98890953	1	pcs
47a	Bearing ring			96538795	3	pcs
49	Impeller cpl.			98459841	16	pcs
51	Shaft, spline, cpl.			98368641	1	pcs
55	Outer sleeve			98812645	1	pcs
56	Base plate			98824711	1	pcs
60	Spring			96538963	4	pcs
64c	Spacer			97980241	1	pcs
64a	Spacing bush		Length (mm): 9.00	96538950	3	pcs
64.d	Spacer			97516851	3	pcs
64	Spacing pipe		Length (mm): 29.05	96535101	12	pcs
66	Wedge lock washer			96536157	1	pcs
66	Wedge lock washer			92575609	1	pcs
67	Lock nut		Thread: M8	98277008	1	pcs
69	Spacing bush		Length (mm): 18.00	96538948	1	pcs
76a	Rivet			96620489	1	pcs
105	Shaft seal		Material type: HQQE	96538914	1	pcs
203	Helical compression spring			96547671	2	pcs