Inventflow: Grundfos A-partner

Grundfos CRE 15-10 A-F-A-E-HQQE

Find the pump here:
https://inventflow.nl/en/pompenfilter/cre/grundfos-cre-15-10-a-f-a-e-hqqe

Contact

info@inventflow.nl
+31 (0) 546 45 80 72

Datasheet

Qty.	Description
1	**CRE 15-10 A-F-A-E-HQQE**

Product No.: 96514506
Vertical, non-self-priming, multistage, in-line, centrifugal pump for installation in pipe systems and mounting on a foundation.

The pump has the following characteristics:
- Impellers and intermediate chambers are made of

Impeller: Stainless steel DIN W.-Nr. EN 1.4301.
Pump housing: - Pump head and base are made of Cast iron.
- The shaft seal has assembly length according to EN 12756.
- Power transmission is via cast iron split coupling.

Flange standard: - Pipework connection is via DIN flanges.

The pump is fitted with an IEC-flanged three-phase MGE motor with frequency converter and PI-controller integrated in the motor terminal box. No additional motor protection is required as both motor and electronics are protected by integrated overload and temperature protection.

External sensor can be connected if controlled pump operation based on for example flow, differential pressure or temperature is required.

A control panel enables setting of required setpoint as well as setting of pump to MIN or MAX operation or to STOP. The control panel has indicator lights for "Operation" and "Fault".

Communication with the pump is possible by means of Grundfos R100 Remote Control enabling further settings as well as reading out of a number of parameters such as "Actual value", "Speed", "Power input" and total "Power consumption".

The terminal box holds terminals for the connection of:
- Pump start/stop (potential-free contact),
- external remote setpoint setting via analog signal, 0 - 5 V, 0 - 10 V, 0(4) - 20 mA,
- 5 V voltage supply for setpoint potentiometer, Imax = 5 mA,
- sensor, 0 - 5 V, 0 - 10 V, 0(4) - 20 mA,
- 24 V voltage supply for sensor, Imax = 40 mA,
- input for forced control to MIN, MAX, External fault or Flowswitch (potential-free contact),
- potential-free fault signal relay with changeover contact, reporting Fault, Operation or Ready,
- RS485 GENIbus.

Controls:
Frequency converter: Built-in

Qty.	Description	
	Pressure sensor:	N
	Liquid:	
	Pumped liquid:	Water
	Liquid temperature range:	-20 .. 120 °C
	Selected liquid temperature:	20 °C
	Density:	998.2 kg/m³
	Technical:	
	Pump speed on which pump data are based:	3528 rpm
	Rated flow:	20.5 m³/h
	Rated head:	163.4 m
	Pump orientation:	Vertical
	Shaft seal arrangement:	Single
	Code for shaft seal:	HQQE
	Approvals on nameplate:	CE,EAC,UKCA,WRAS,ACS
	Curve tolerance:	ISO9906:2012 3B
	Materials:	
	Base:	Cast iron
		EN 1561 EN-GJL-200
		ASTM A48-25B
	Impeller:	Stainless steel
		EN 1.4301
		AISI 304
	Bearing:	SIC
	Installation:	
	Maximum ambient temperature:	40 °C
	Maximum operating pressure:	25 bar
	Max pressure at stated temp:	25 bar / 120 °C
		25 bar / -20 °C
	Type of connection:	DIN
	Size of inlet connection:	DN 50
	Size of outlet connection:	DN 50
	Pressure rating for connection:	PN 25
	Flange size for motor:	FF300
	Electrical data:	
	Motor standard:	IEC
	Motor type:	160MD
	IE Efficiency class:	IE3
	Rated power - P2:	15 kW
	Power (P2) required by pump:	15 kW
	Mains frequency:	50 Hz
	Rated voltage:	3 x 380-480 V
	Rated current:	30.0-26.0 A
	Cos phi - power factor:	0.91-0.86
	Rated speed:	480-3540 rpm
	Efficiency:	IE3 91,9%
	Motor efficiency at full load:	91.9 %
	Number of poles:	2
	Enclosure class (IEC 34-5):	IP55
	Insulation class (IEC 85):	F
	Motor No:	85901025
	Others:	
	Minimum efficiency index, MEI ≥:	0.70
	DOE Pump Energy Index CL:	0.00
	DOE Pump Energy Index VL:	0.00
	Net weight:	211 kg
	Gross weight:	262 kg
	Shipping volume:	0.82 m³
	Danish VVS No.:	385944710
	Finnish LVI No.:	4925698

Qty.	Description
	Country of origin: HU Custom tariff no.: 84137075

96514506 CRE 15-10 A-F-A-E-HQQE 50 Hz

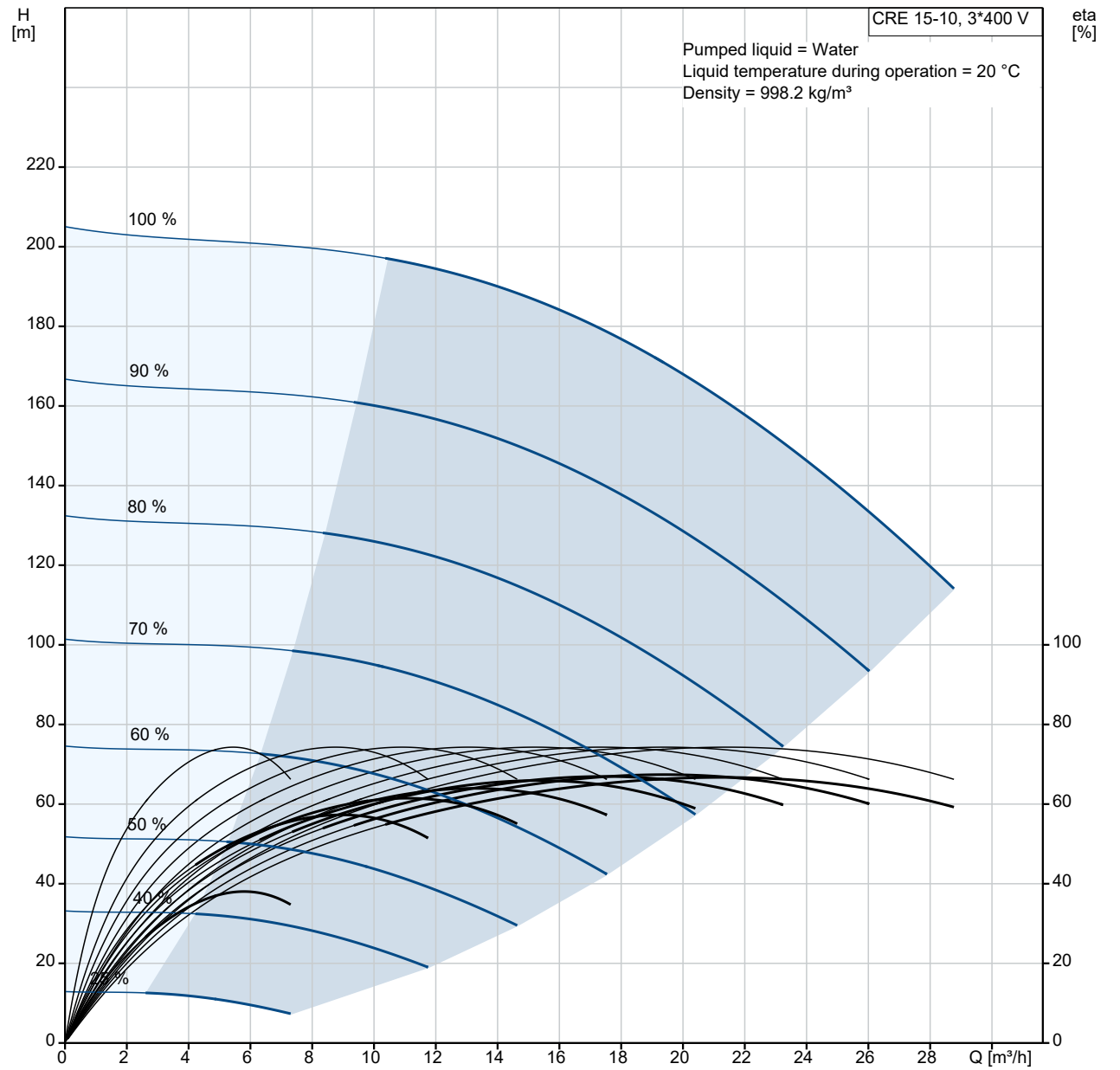

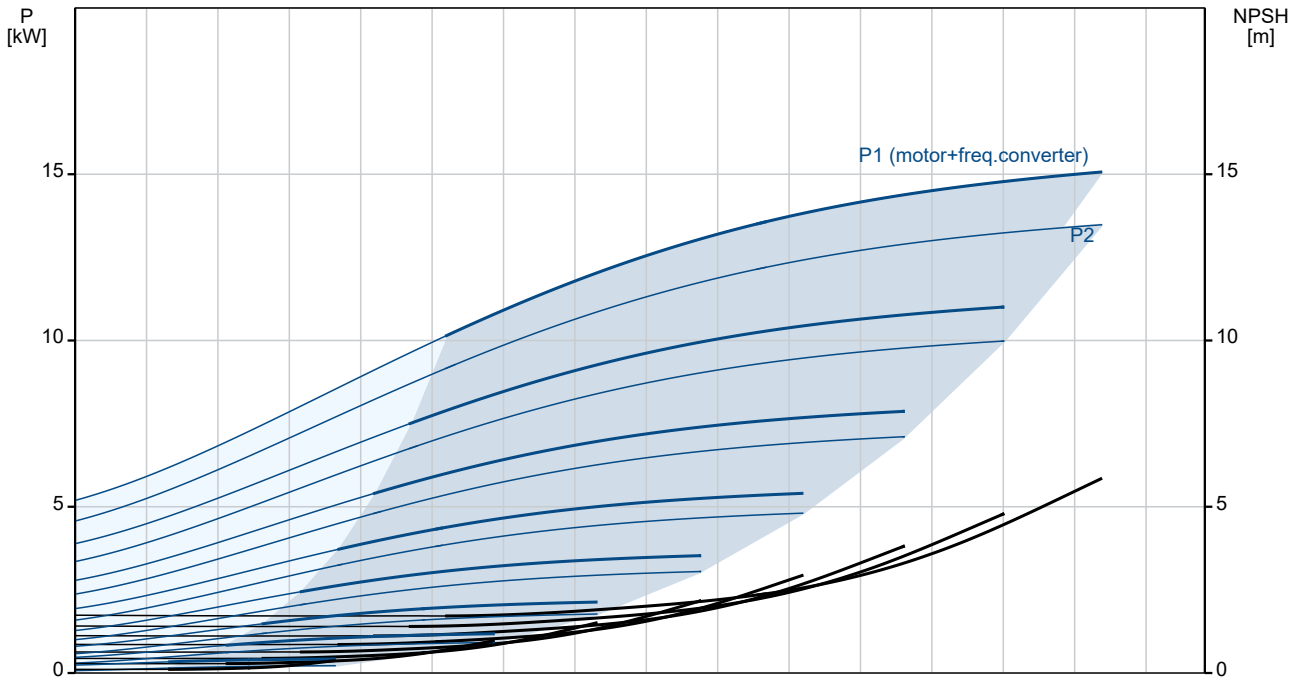

Description	Value
General information:	
Product name:	CRE 15-10 A-F-A-E-HQQE
Product No:	96514506
EAN number:	5700396707532
Technical:	
Pump speed on which pump data are based:	3528 rpm
Rated flow:	20.5 m³/h
Rated head:	163.4 m
Maximum head:	203 m
Stages:	10
Impellers:	10
Number of reduced-diameter impellers:	0
Low NPSH:	N
Pump orientation:	Vertical
Shaft seal arrangement:	Single
Code for shaft seal:	HQQE
Approvals on nameplate:	CE,EAC,UKCA,WRAS,ACS
Curve tolerance:	ISO9906:2012 3B
Pump version:	A
Model:	A
Materials:	
Base:	Cast iron
Base:	EN 1561 EN-GJL-200
Base:	ASTM A48-25B
Impeller:	Stainless steel
Impeller:	EN 1.4301
Impeller:	AISI 304
Material code:	A
Code for rubber:	E
Bearing:	SIC
Installation:	
Maximum ambient temperature:	40 °C
Maximum operating pressure:	25 bar
Max pressure at stated temp:	25 bar / 120 °C
Max pressure at stated temp:	25 bar / -20 °C
Type of connection:	DIN
Size of inlet connection:	DN 50
Size of outlet connection:	DN 50
Pressure rating for connection:	PN 25
Flange size for motor:	FF300
Connect code:	F
Liquid:	
Pumped liquid:	Water
Liquid temperature range:	-20 .. 120 °C
Selected liquid temperature:	20 °C
Density:	998.2 kg/m³
Electrical data:	
Motor standard:	IEC
Motor type:	160MD
IE Efficiency class:	IE3
Rated power - P2:	15 kW
Power (P2) required by pump:	15 kW
Mains frequency:	50 Hz
Rated voltage:	3 x 380-480 V
Rated current:	30.0-26.0 A
Cos phi - power factor:	0.91-0.86
Rated speed:	480-3540 rpm
Efficiency:	IE3 91,9%
Motor efficiency at full load:	91.9 %
Number of poles:	2
Enclosure class (IEC 34-5):	IP55
Insulation class (IEC 85):	F

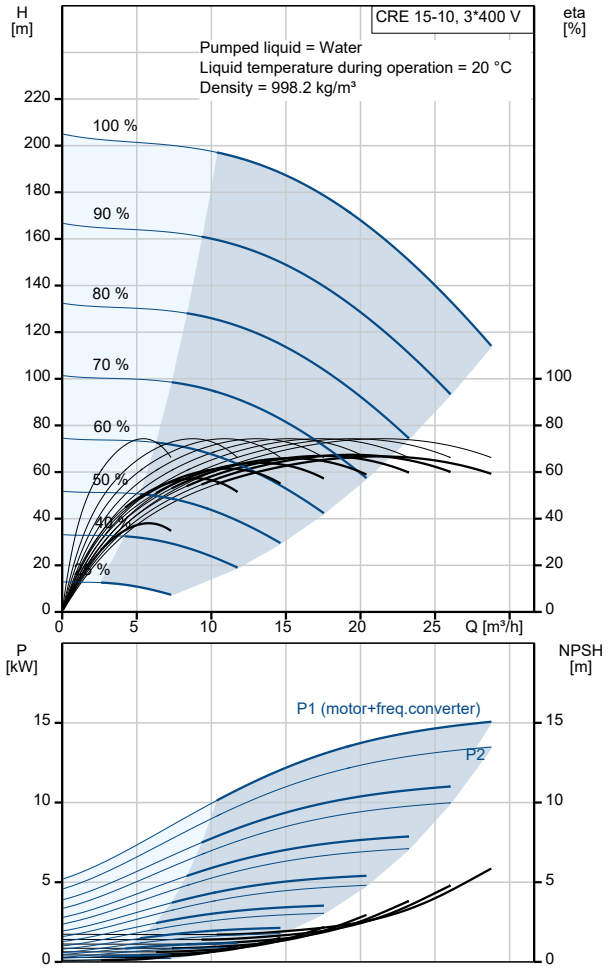

Description	Value
Motor protec:	YES
Motor No:	85901025
Controls:	
Function Module:	ADVANCED I/O
Frequency converter:	Built-in
Pressure sensor:	N
Others:	
Minimum efficiency index, MEI ≥:	0.70
DOE Pump Energy Index CL:	0.00
DOE Pump Energy Index VL:	0.00
Net weight:	211 kg
Gross weight:	262 kg
Shipping volume:	0.82 m^3
Config. file no:	95139527
Danish VVS No.:	385944710
Finnish LVI No.:	4925698
Country of origin:	HU
Custom tariff no.:	84137075

96514506 CRE 15-10 A-F-A-E-HQQE 50 Hz

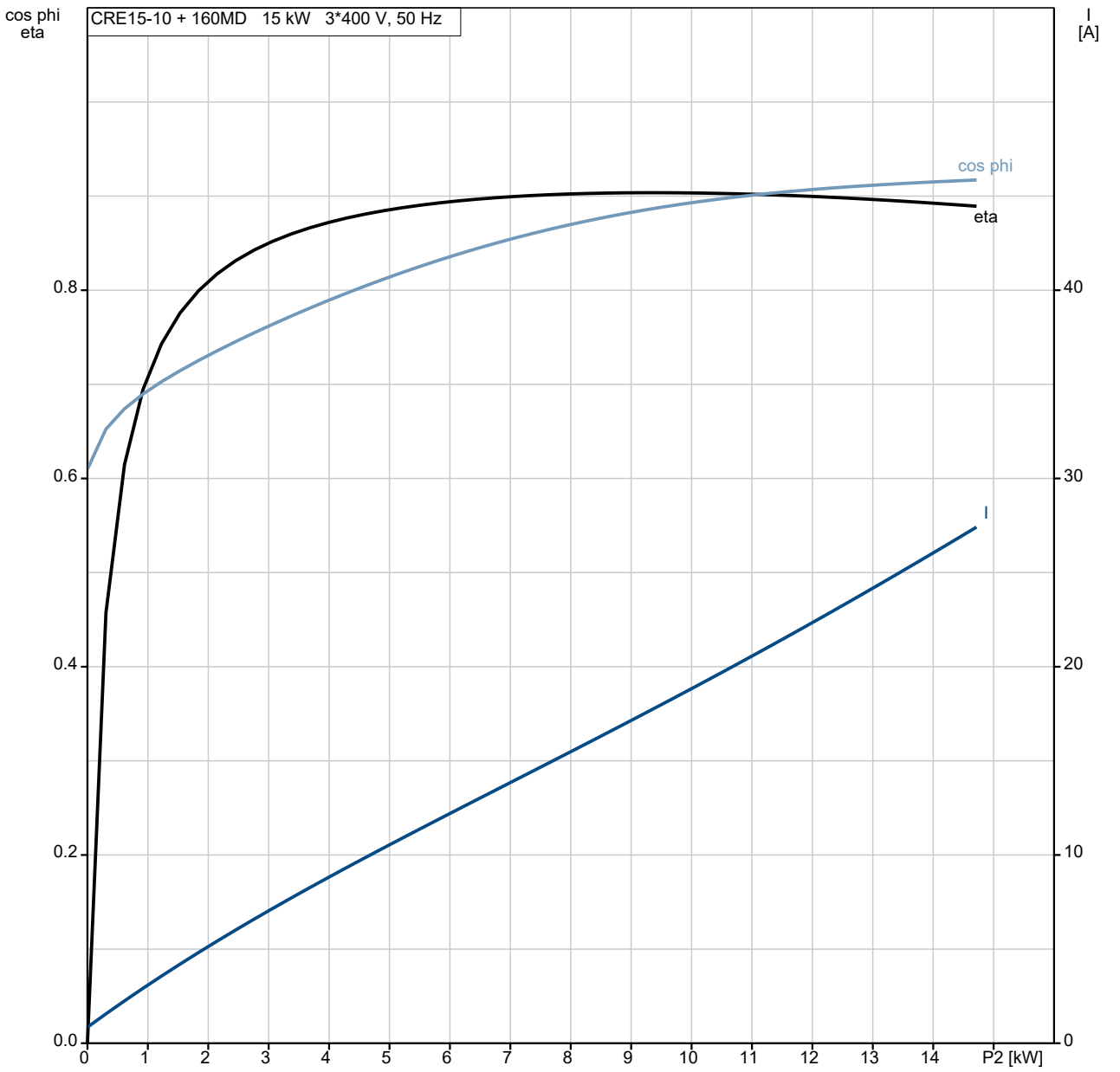

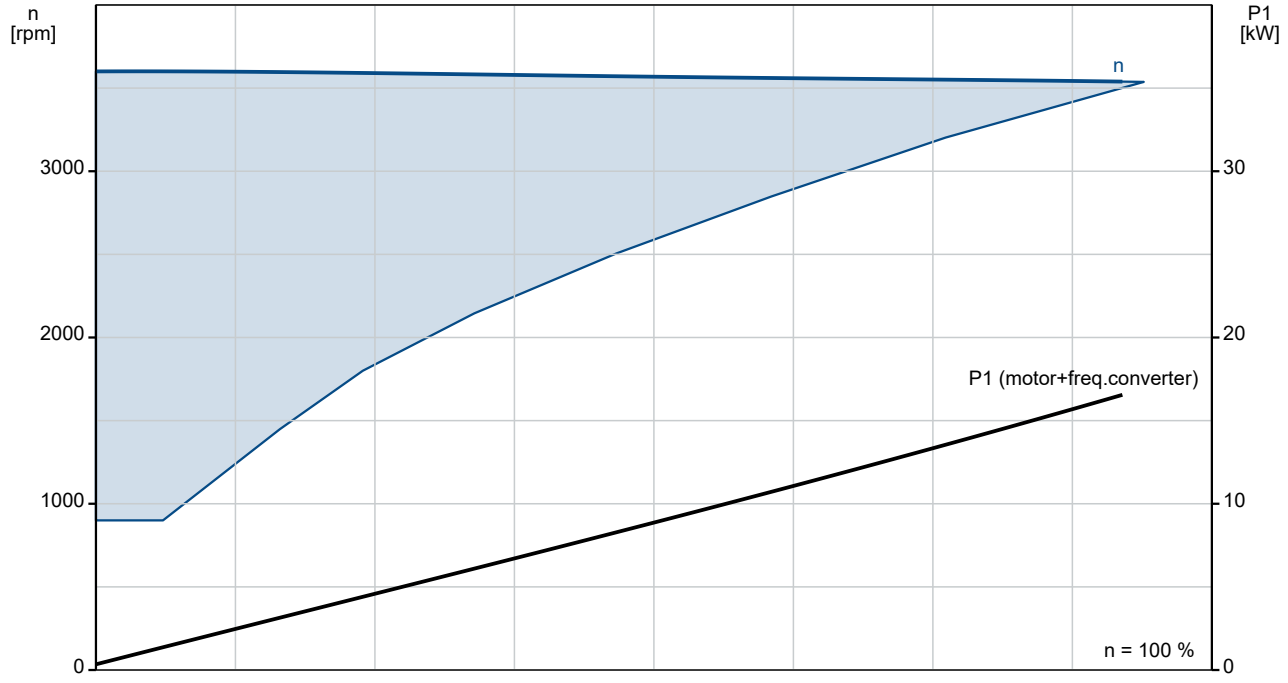

96514506 CRE 15-10 A-F-A-E-HQQE 50 Hz

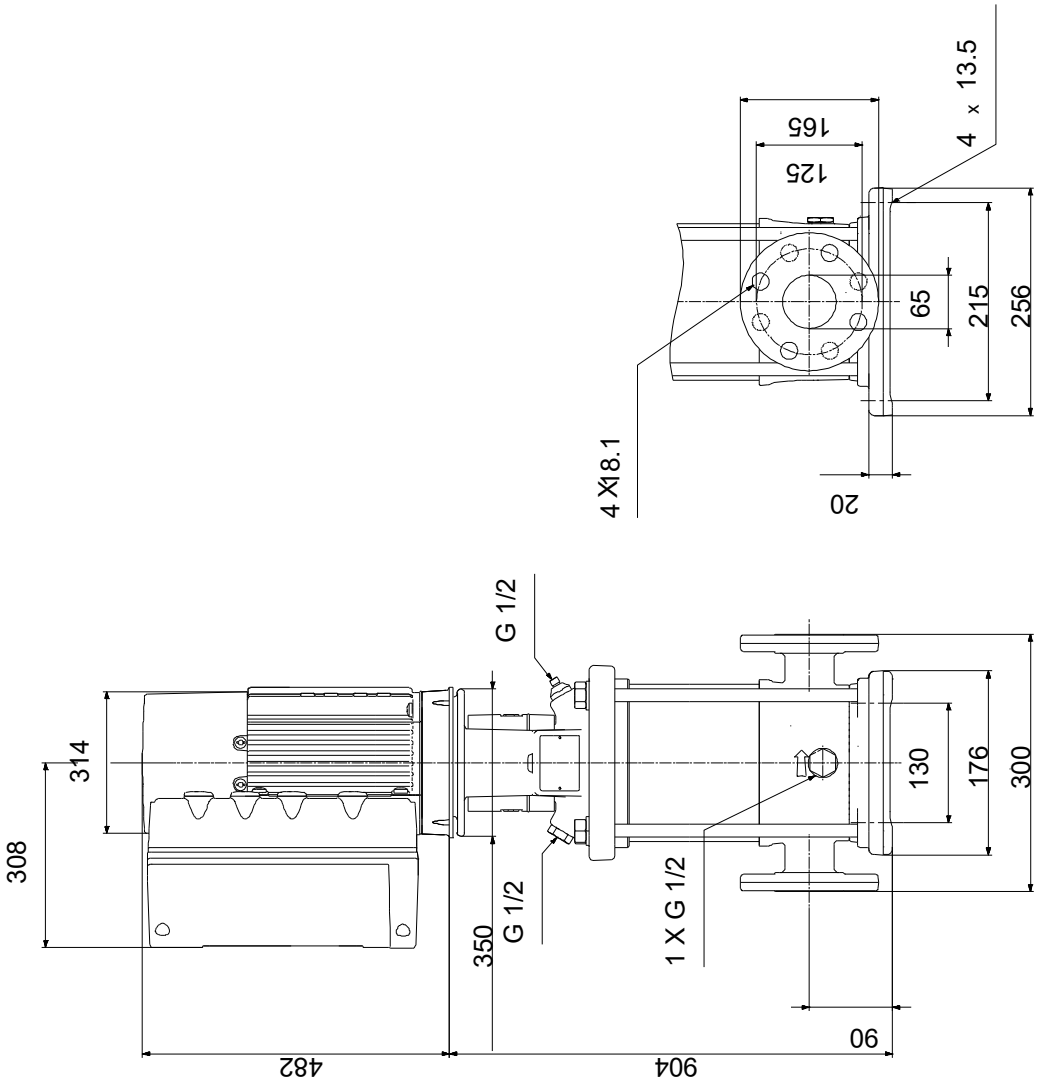

Note! All units are in [mm] unless others are stated.
Disclaimer: This simplified dimensional drawing does not show all details.

Spare parts CRE 15-10, Product No. 96514506
Produced After 0834 (production year and week number)

	Pos	Omschrijving	Opmerking tekst	Classificatie Gegevens	Onderdeelnr.	Aantal	Eenheid
-		Kit, chamber stack			96508492	1	pcs
-	80	Chamber stack				1	
-	3	Top intermediate chamber					1
		Intermediate chamber					
		Front plate					
		Guide vane					
+	4a	Intermediate chamber cpl.					2
-	4	Intermediate chamber cpl.					7
	45	Neck ring cpl.					
	65	Retainer for upper seal ring					
	26a	Strap cpl.		Length (mm): 449MM			2
	26.c	Washer		Designation: DIN 125A			2
				Thickness: 1,6			
	26.b	Hex head screw					2
	44b	Inlet part					1
-	44a	Inlet part cpl.					1
		Sand Lifter					
		Guide cup					
		Inlet part					
	45	Neck ring cpl.					
	65	Retainer for upper seal ring					
	47a	Bearing ring					2
-	49	Impeller cpl.					10
		Impeller plate					
		Impeller plate					
		Blade					
	49c	Wear ring					
-	51	Shaft, spline, cpl.					1
		Bar					
	62	Stop ring					
	64d	Spacing bush					2
	64c	Spacer					1
	64a	Spacing pipe		Internal diameter: 17,5			2
				Length (mm): 17			
	64	Spacing pipe		Length (mm): 43.6			7
	66	Wedge lock washer					1
	67	Lock nut		Thread: M8			1
	69	Spacing bush					1
-		Kit, coupling			96511352	1	pcs
		Adjusting fork				1	
-	8	Coupling				1	
	9	Hex socket head cap screw		Designation: DIN 912			4
				Length (mm): 25			
				Thread: M10			
	10a	Coupling half					2
	10	Shaft pin		Diameter: 5			1
				Length (mm): 26			
-		Kit, coupling guard			96509614	1	pcs
	7.a	Combi Slot Torx screw				4	
	7	Coupling guard				2	
-		Kit, gaskets			96509609	1	pcs
		Gasket				2	
	24	O-ring				2	
	37	O-ring				2	
	38	O-ring				1	
	38	O-ring				1	
	38	O-ring				2	
	60	Spring				4	
	415	Gasket		Internal diameter: 44		2	

Pos	Omschrijving	Opmerking tekst	Classificatie Gegevens	Onderdeelnr.	Aantal	Eenheid
			Outer diameter: 60			
			Thickness: 2			
441b	Gasket		Internal diameter: 49		2	
			Outer diameter: 92			
			Thickness: 2			
-	Kit, plug			96511311	1	pcs
- 18	Air vent screw				1	
	Spindle					1
	Plug					1
25a	Drain plug				1	
25	Plug				1	
38	O-ring				1	
38	O-ring				1	
38	O-ring				2	
38	O-ring		Diameter: 5,3		1	
			Material type: FKM			
			Thickness: 2,4			
38	O-ring		Diameter: 16,3		1	
			Material type: FKM			
			Thickness: 2,4			
38	O-ring		Diameter: 16,3		2	
			Material type: FKM			
			Thickness: 2,4			
-	Kit, shaft seal HQQE			96511844	1	pcs
105	Shaft seal		Material type: HQQE		1	
-	Kit, wear parts			96511827	1	pcs
- 4a	Intermediate chamber cpl.				2	
	Sand Lifter					1
	Guide cup					1
	Bearing plate					1
	Guide vane					10
3	Intermediate chamber					1
45	Neck ring cpl.					1
47	Bearing bush					1
65	Retainer					1
26.c	Washer		Designation: DIN 125A		2	
			Thickness: 1,6			
26.b	Hex head screw				2	
45	Neck ring cpl.				8	
47a	Bearing ring				2	
49c	Wear ring				10	
62	Retaining ring				1	
64d	Spacing bush				2	
64c	Spacer				1	
64b	Spacing bush		Length (mm): 5.00		1	
64a	Spacing pipe		Internal diameter: 17,5		2	
			Length (mm): 17			
65	Retainer				8	
66	Wedge lock washer				1	
67	Lock nut		Thread: M8		1	
-	Motor				1	pcs
+	Kit, bearing cpl.			96796676	1	
-	Kit, bearing plate			96796664	1	
155.a	Bearing cover					1
208a	Gasket					3
208	Hex socket head cap screw		Designation: DIN912			3
			Length (mm): 40			
			Thread: M5			
-	Kit, connector plugs			96348923	1	
	Connector plug 5-pole					1
	Connector plug 4-pole					1
	Connector plug 4-pole					1
	Connector plug 3-pole					1
	Connector plug 3-pole					1

Pos	Omschrijving	Opmerking tekst	Classificatie Gegevens	Onderdeelnr.	Aantal	Eenheid
	Connector plug 3-pole					1
	Connector plug 3-pole					1
	Connector plug					1
- 273	Kit, control board			96348918	1	
	Service kit instruction					1
	Controlboard					1
-	Kit, eyebolt			96796712	1	
189	Eyebolt					2
-	Kit, fan cover			96830826	1	
151	Fan cover					1
152.a	Rubber bush					4
152	Hex head cap screw					4
196	Diaphragm					1
-	Kit, flange			96796662	1	
156.b	Flange					1
159.b	Seal ring					1
185.b	Nut					4
185	Hex socket head cap screw					4
186	Drain plug					4
195.a	Grease nipple					1
-	Kit, funct. module - adv. I/O			96348936	1	
263	Add-on module, cpl. w/plugs					1
-	Kit, funct. module -Geni/RS485			96348932	1	
263	Add-on module, cpl. w/plugs					1
-	Kit, gaskets			96798508	1	
184	O-ring		Diameter: 235			2
275	Kit, inverter board			96348920	1	
-	Kit, lubrication nipple			96796671	1	
195.b	Grease nipple					2
195.a	Grease nipple					1
-	Kit, motor			96844358	1	
	Flex insulation					3
	EMC filter					1
	Cover cpl.					1
	Motor					1
99a	Retaining ring					1
151	Fan cover					1
152.a	Rubber bush					4
152	Hex head cap screw					4
156	Fan					1
177	Torx Screw					1
185.b	Nut					4
196	Diaphragm					1
273a	Pan head thread forming screw					4
-	Kit, ND-end shield cpl.			96796669	1	
32b	Waved washer					1
156.a	End shield NDE					1
157	O-ring					1
159	V-ring					1
185.c	Nut					4
185.a	Hex socket head cap screw					4
195.b	Grease nipple					1
-	Kit, opr. panel			96348924	1	
259	Operation panel					1
274	Kit, rectifier board			96348921	1	
-	Kit, terminal box			96348914	1	
164	Cover cpl.					1
166	Pan head thread forming screw					5
251	Terminal box					1
277	Blind cover					1
283	Motor cover cpl.					1
284	Cover					1
-	Kit, varistor			96348917	1	
279.b	Pan head thread forming screw					2

Pos	Omschrijving	Opmerking tekst	Classificatie Gegevens	Onderdeelnr.	Aantal	Eenheid
279	Varistor				1	
-	Motor				1	pcs
+	Kit, bearing cpl.			96796676	1	
-	Kit, bearing plate			96796664	1	
155.a	Bearing cover				1	
208a	Gasket				3	
208	Hex socket head cap screw		Designation: DIN912 Length (mm): 40 Thread: M5		3	
-	Kit, connector plugs			96348923	1	
	Connector plug 5-pole				1	
	Connector plug 4-pole				1	
	Connector plug 4-pole				1	
	Connector plug 3-pole				1	
	Connector plug 3-pole				1	
	Connector plug 3-pole				1	
	Connector plug 3-pole				1	
	Connector plug				1	
- 273	Kit, control board			96348918	1	
	Service kit instruction				1	
	Controlboard				1	
-	Kit, eyebolt			96796712	1	
189	Eyebolt				2	
-	Kit, fan cover			96830826	1	
151	Fan cover				1	
152.a	Rubber bush				4	
152	Hex head cap screw				4	
196	Diaphragm				1	
-	Kit, flange			96796662	1	
156.b	Flange				1	
159.b	Seal ring				1	
185.b	Nut				4	
185	Hex socket head cap screw				4	
186	Drain plug				4	
195.a	Grease nipple				1	
-	Kit, funct. module - E-pump			96348929	1	
263	MGE large I/O add-on				1	
-	Kit, funct. module -Geni/RS485			96348932	1	
263	Add-on module, cpl. w/plugs				1	
-	Kit, gaskets			96798508	1	
184	O-ring		Diameter: 235		2	
275	Kit, inverter board			96348920	1	
-	Kit, lubrication nipple			96796671	1	
195.b	Grease nipple				2	
195.a	Grease nipple				1	
-	Kit, motor			96844358	1	
	Flex insulation				3	
	EMC filter				1	
	Cover cpl.				1	
	Motor				1	
99a	Retaining ring				1	
151	Fan cover				1	
152.a	Rubber bush				4	
152	Hex head cap screw				4	
156	Fan				1	
177	Torx Screw				1	
185.b	Nut				4	
196	Diaphragm				1	
273a	Pan head thread forming screw				4	
-	Kit, ND-end shield cpl.			96796669	1	
32b	Waved washer				1	
156.a	End shield NDE				1	
157	O-ring				1	
159	V-ring				1	

	Pos	Omschrijving	Opmerking tekst	Classificatie Gegevens	Onderdeelnr.	Aantal	Eenheid
	185.c	Nut				4	
	185.a	Hex socket head cap screw				4	
	195.b	Grease nipple				1	
-		Kit, opr. panel			96348924	1	
	259	Operation panel				1	
	274	Kit, rectifier board			96348921	1	
-		Kit, terminal box			96348914	1	
	164	Cover cpl.				1	
	166	Pan head thread forming screw				5	
	251	Terminal box				1	
	277	Blind cover				1	
	283	Motor cover cpl.				1	
	284	Cover				1	
-		Kit, varistor			96348917	1	
	279.b	Pan head thread forming screw				2	
	279	Varistor				1	
	1	Flange			98913788	1	pcs
	2a	Pump head			98824714	1	pcs
+	3	Top intermediate chamber			96538971	1	pcs
+	3	Top intermediate chamber			98371105	1	pcs
+	4a	Intermediate chamber cpl.			96538842	2	pcs
+	4a	Intermediate chamber cpl.			98371109	2	pcs
-	4	Intermediate chamber cpl.			96538817	7	pcs
	65	Retainer for upper seal ring			97699527	1	
	65	Retainer for upper seal ring			96587913	1	
+	4	Intermediate chamber cpl.			98371107	7	pcs
	6	Base			98681111	1	pcs
	7a	Combi Slot Torx screw			96886324	4	pcs
	10	Shaft pin		Diameter: 5	96536473	1	pcs
				Length (mm): 26			
	10	Shaft pin		Diameter: 5	96587588	1	pcs
				Length (mm): 26			
+	18	Air vent screw			96547461	1	pcs
+	18	Air vent screw			95061351	1	pcs
	25	Plug			96536013	1	pcs
	25a	Drain plug			96535881	1	pcs
	26a	Strap cpl.		Length (mm): 449MM	98984432	2	pcs
	26.c	Washer		Designation: DIN 125A	99262704	2	pcs
				Thickness: 1,6			
	26.c	Washer		Designation: DIN 125A	99886930	2	pcs
				Thickness: 1,6			
	26	Staybolt			98982848	4	pcs
	28	Hex head screw		Length (mm): 25	99522923	4	pcs
				Thread: M12			
	32	Washer		Designation: DIN 125 A	98923051	4	pcs
				Internal diameter: 17			
				Outer diameter: 30			
				Thickness: 3			
	36	Hex nut		Thread: M16	96620480	4	pcs
	37	O-ring			96538857	2	pcs
	38	O-ring			99198791	1	pcs
	38	O-ring			99198815	2	pcs
	38	O-ring			99412727	2	pcs
	44b	Inlet part			98814595	1	pcs
+	44a	Inlet part cpl.			98818924	1	pcs
	47a	Bearing ring			96538795	2	pcs
-	49	Impeller cpl.			98394448	10	pcs
	49c	Wear ring			96547340	1	
+	51	Shaft, spline, cpl.			98368618	1	pcs
	55	Outer sleeve			98812644	1	pcs
	60	Spring			96538963	4	pcs
	64d	Spacing bush			96538947	2	pcs
	64c	Spacer			97980241	1	pcs
	64a	Spacing pipe		Internal diameter: 17,5	98417487	2	pcs

Pos	Omschrijving	Opmerking tekst	Classificatie Gegevens	Onderdeelnr.	Aantal	Eenheid
			Length (mm): 17			
64	Spacing pipe		Length (mm): 43.6	96535107	7	pcs
66	Wedge lock washer			96536157	1	pcs
66	Wedge lock washer			92575609	1	pcs
67	Lock nut		Thread: M8	98277008	1	pcs
69	Spacing bush			96538949	1	pcs
76a	Rivet			96620489	1	pcs
105	Shaft seal		Material type: HQQE	96538914	1	pcs