Inventflow: Grundfos A-partner

Grundfos CRN 1-19 A-FGJ-A-E-HQQE

Find the pump here:
https://inventflow.nl/en/pompenfilter/crn/grundfos-crn-1-19-a-fgj-a-e-hqqe

Contact

info@inventflow.nl
+31 (0) 546 45 80 72

Datasheet

Qty.	Description
1	**CRN 1-19 A-FGJ-A-E-HQQE**

Product No.: 96516412
Vertical, non-self-priming, multistage, in-line, centrifugal pump for installation in pipe systems and mounting on a foundation.

The pump has the following characteristics:
- Impellers, intermediate chambers and outer sleeve are made of

Impeller: Stainless steel, EN 1.4401.
- Pump head cover and base are made of

Pump housing: Stainless steel, EN 1.4408.
- The shaft seal has assembly length according to EN 12756.
- Power transmission is via cast iron split coupling.

Flange standard: - Pipework connection is via DIN / ANSI / JIS flanges/couplings.

Phase: The motor is a 3-phase AC motor.

Controls:
Frequency converter: NONE

Liquid:
Pumped liquid: Water
Liquid temperature range: -20 .. 120 °C
Selected liquid temperature: 20 °C
Density: 998.2 kg/m³

Technical:
Pump speed on which pump data are based: 2853 rpm
Rated flow: 1.8 m³/h
Rated head: 88.4 m
Pump orientation: Vertical
Shaft seal arrangement: Single
Code for shaft seal: HQQE
Approvals on nameplate: CE, EAC,ACS
Curve tolerance: ISO9906:2012 3B

Materials:
Base: Stainless steel
EN 1.4408
AISI 316
Impeller: Stainless steel
EN 1.4401
AISI 316
Bearing: SIC

Installation:
Maximum ambient temperature: 60 °C
Maximum operating pressure: 25 bar
Max pressure at stated temp: 25 bar / 120 °C
25 bar / -20 °C
Type of connection: DIN / ANSI / JIS

Qty.	Description	
	Size of inlet connection:	DN 25/32
	Size of outlet connection:	DN 25/32
	Pressure rating for connection:	PN 25
	Flange rating inlet:	300 lb
	Flange size for motor:	FT100
	Electrical data:	
	Motor standard:	IEC
	Motor type:	80C
	IE Efficiency class:	IE3
	Rated power - P2:	1.1 kW
	Power (P2) required by pump:	1.1 kW
	Mains frequency:	50 Hz
	Rated voltage:	3 x 220-240D/380-415Y V
	Rated current:	4.35/2.50 A
	Starting current:	450-500 %
	Cos phi - power factor:	0.83-0.76
	Rated speed:	2840-2870 rpm
	Efficiency:	IE3 82,7%
	Motor efficiency at full load:	82.7 %
	Motor efficiency at 3/4 load:	84.6 %
	Motor efficiency at 1/2 load:	85.4 %
	Number of poles:	2
	Enclosure class (IEC 34-5):	55 Dust/Jetting
	Insulation class (IEC 85):	F
	Motor No:	85905176
	Others:	
	Minimum efficiency index, MEI ≥:	0.70
	Net weight:	32.2 kg
	Gross weight:	36.3 kg
	Shipping volume:	0.092 m³
	Finnish LVI No.:	4925576
	Country of origin:	HU
	Custom tariff no.:	84137075

96516412 CRN 1-19 A-FGJ-A-E-HQQE 50 Hz

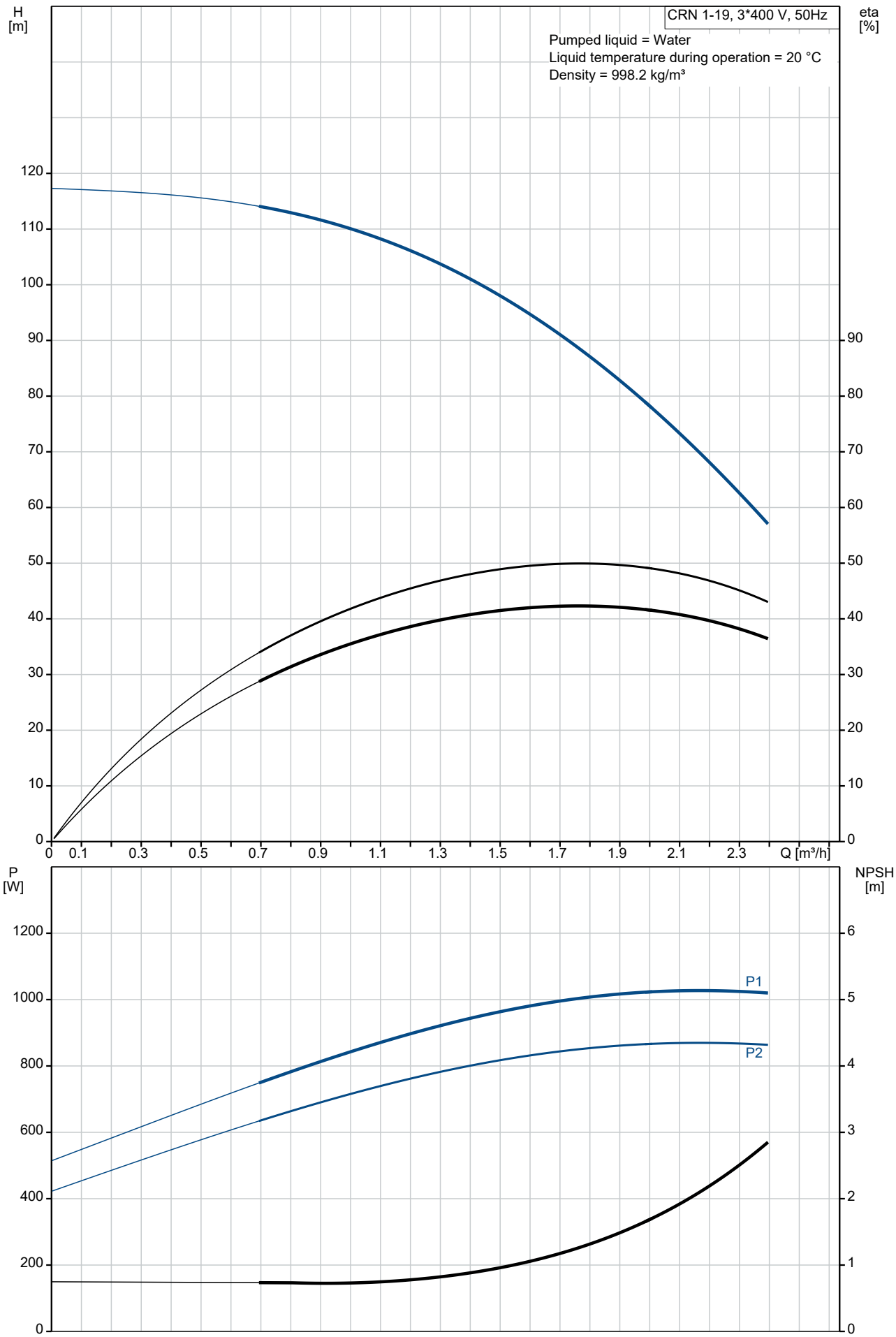

Description	Value
General information:	
Product name:	CRN 1-19 A-FGJ-A-E-HQQE
Product No:	96516412
EAN number:	5700396742700
Technical:	
Pump speed on which pump data are based:	2853 rpm
Rated flow:	1.8 m³/h
Rated head:	88.4 m
Maximum head:	117.4 m
Stages:	19
Impellers:	19
Number of reduced-diameter impellers:	0
Low NPSH:	N
Pump orientation:	Vertical
Shaft seal arrangement:	Single
Code for shaft seal:	HQQE
Approvals on nameplate:	CE, EAC,ACS
Curve tolerance:	ISO9906:2012 3B
Pump version:	A
Model:	A
Materials:	
Base:	Stainless steel
Base:	EN 1.4408
Base:	AISI 316
Impeller:	Stainless steel
Impeller:	EN 1.4401
Impeller:	AISI 316
Material code:	A
Code for rubber:	E
Bearing:	SIC
Installation:	
Maximum ambient temperature:	60 °C
Maximum operating pressure:	25 bar
Max pressure at stated temp:	25 bar / 120 °C
Max pressure at stated temp:	25 bar / -20 °C
Type of connection:	DIN / ANSI / JIS
Size of inlet connection:	DN 25/32
Size of outlet connection:	DN 25/32
Pressure rating for connection:	PN 25
Flange rating inlet:	300 lb
Flange size for motor:	FT100
Connect code:	FGJ
Liquid:	
Pumped liquid:	Water
Liquid temperature range:	-20 .. 120 °C
Selected liquid temperature:	20 °C
Density:	998.2 kg/m³
Electrical data:	
Motor standard:	IEC
Motor type:	80C
IE Efficiency class:	IE3
Rated power - P2:	1.1 kW
Power (P2) required by pump:	1.1 kW
Mains frequency:	50 Hz
Rated voltage:	3 x 220-240D/380-415Y V
Rated current:	4.35/2.50 A
Starting current:	450-500 %
Cos phi - power factor:	0.83-0.76
Rated speed:	2840-2870 rpm
Efficiency:	IE3 82,7%
Motor efficiency at full load:	82.7 %
Motor efficiency at 3/4 load:	84.6 %

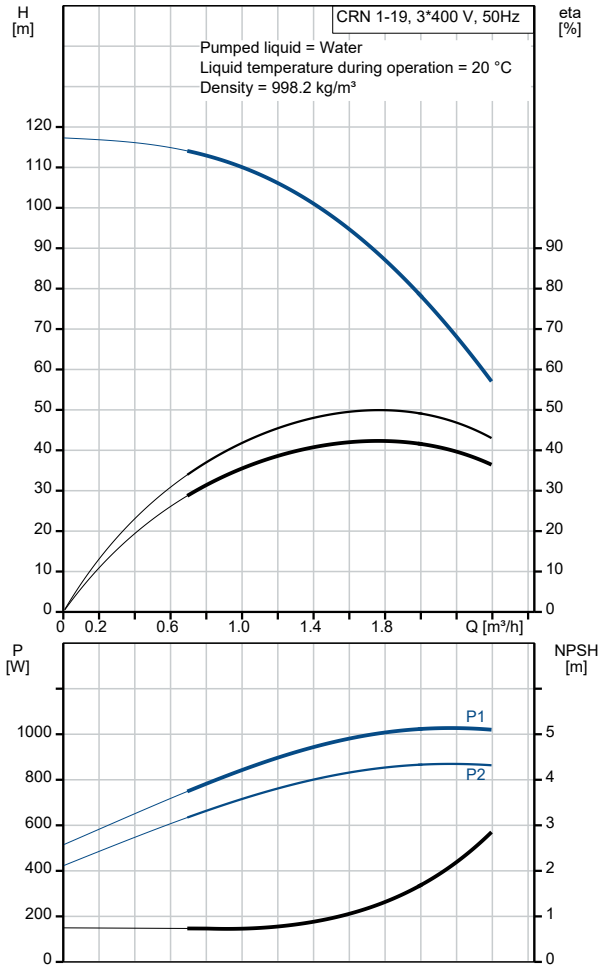

Description	Value
Motor efficiency at 1/2 load:	85.4 %
Number of poles:	2
Enclosure class (IEC 34-5):	55 Dust/Jetting
Insulation class (IEC 85):	F
Motor protec:	NONE
Motor No:	85905176
Controls:	
Frequency converter:	NONE
Others:	
Minimum efficiency index, MEI ≥:	0.70
Net weight:	32.2 kg
Gross weight:	36.3 kg
Shipping volume:	0.092 m^3
Finnish LVI No.:	4925576
Country of origin:	HU
Custom tariff no.:	84137075

96516412 CRN 1-19 A-FGJ-A-E-HQQE 50 Hz

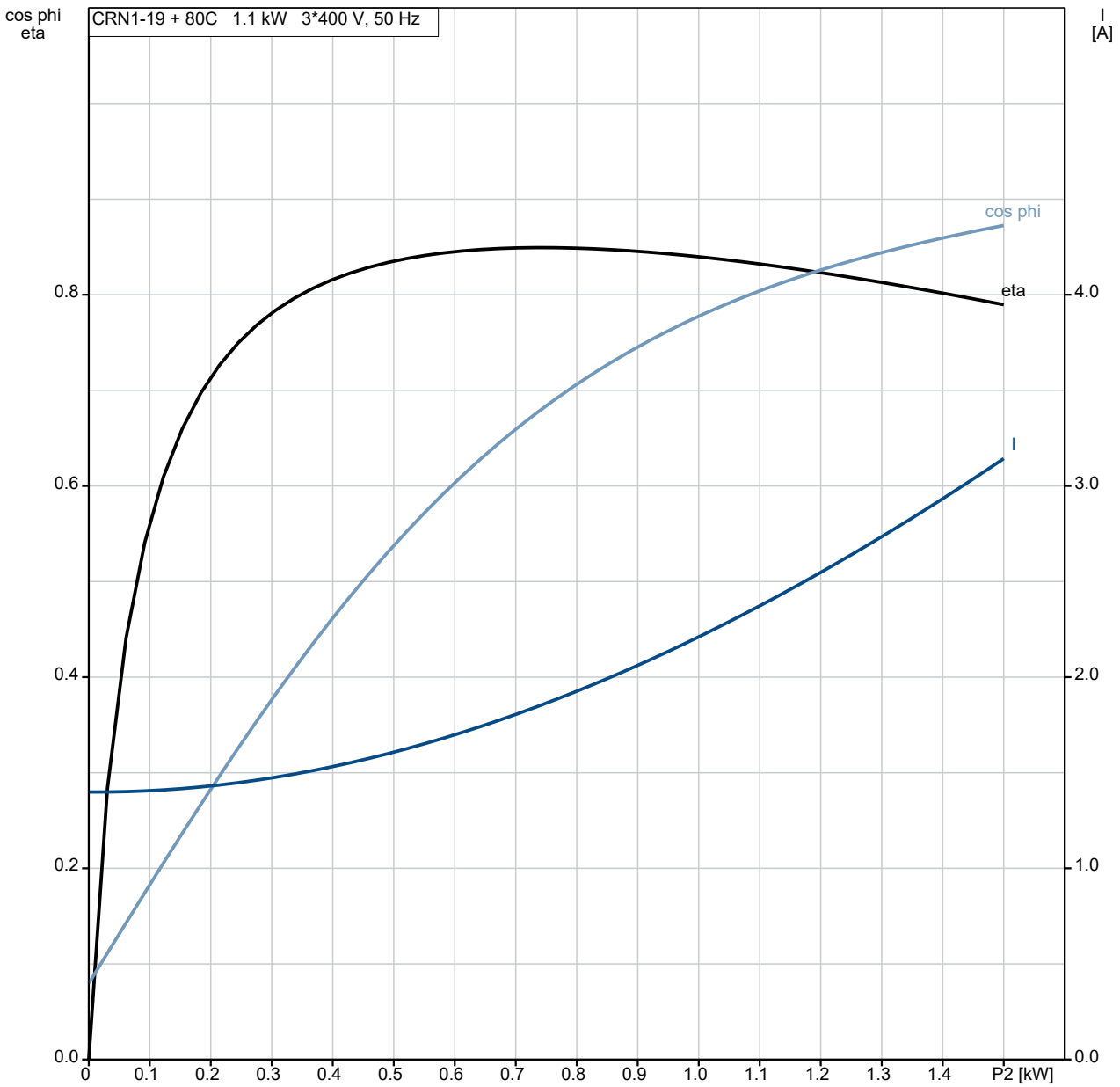

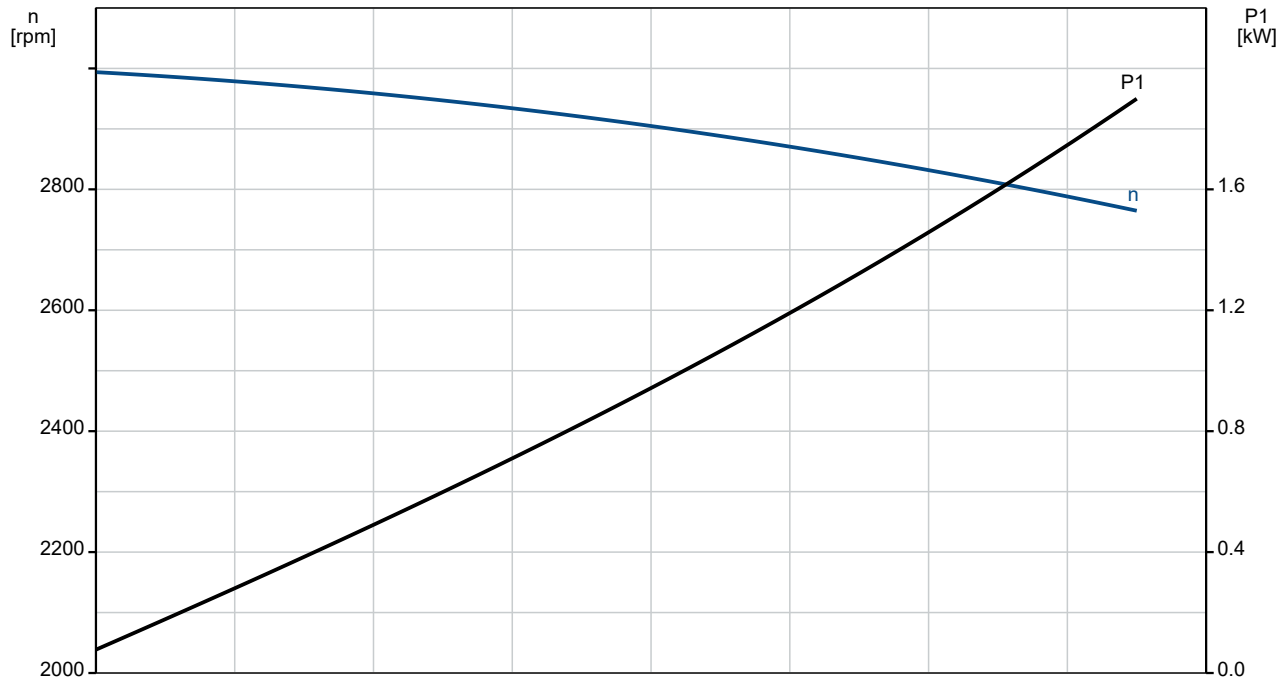

96516412 CRN 1-19 A-FGJ-A-E-HQQE 50 Hz

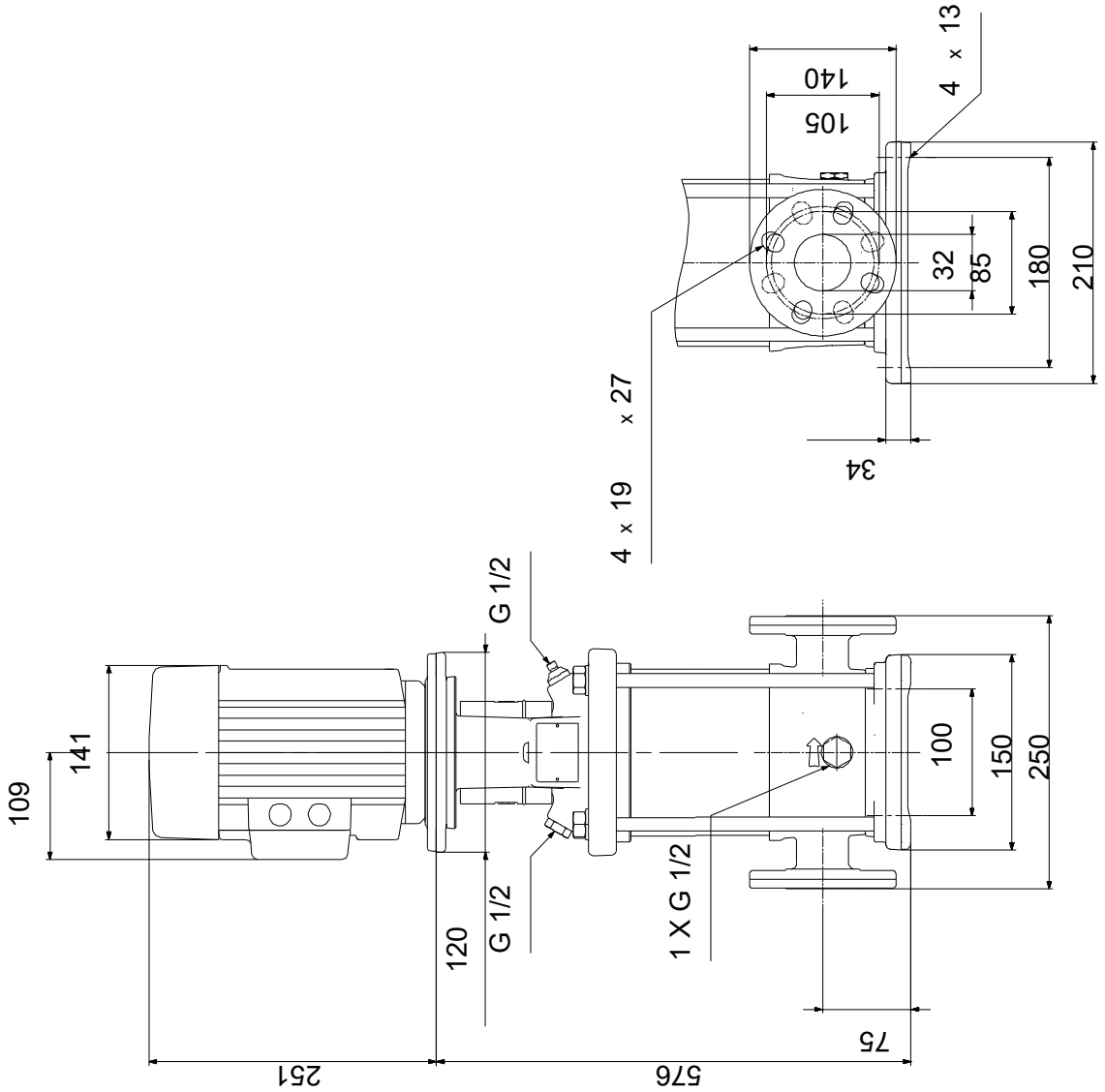

Note! All units are in [mm] unless others are stated.
Disclaimer: This simplified dimensional drawing does not show all details.

Spare parts CRN 1-19, Product No. 96516412
Produced After 1101 (production year and week number)

	Pos	Omschrijving	Opmerking tekst	Classificatie Gegevens	Onderdeelnr.	Aanta	Eenheid
-	80	Kit, chamber stack		Bearing type: SILICON CARBIDE	96453521	1	pcs
-	4a	Chamber w. bearing cpl.				2	
		Vane					1
		Retainer					1
		Guide vane					6
	4a	Intermediate chamber					1
	45	Neck ring					1
	47	Bearing bush					1
	65	Retainer for seal ring					1
	65	Neck ring retainer					1
-	4	Chamber cpl.				16	
	4a	Intermediate chamber					1
	45	Neck ring					1
	65	Neck ring retainer					1
-	5a	Chamber cpl.				1	
		Vane					1
	4a	Intermediate chamber					1
	45	Neck ring					1
	65	Retainer for seal ring					1
	65	Neck ring retainer					1
-	44a	Guide vane				1	
		Plate					1
	50	Top plate					1
	47a	Bearing ring				2	
	49	Impeller cpl.				19	
	51	Shaft, spline, cpl.				1	
	64d	Spacing pipe		Internal diameter: 12,85		2	
				Outer diameter: 15,85			
				Length (mm): 4,50			
	64c	Clamp, splined		Internal diameter: 8,5		1	
				Outer diameter: 15			
	64a	Spacing pipe				16	
	66	Wedge lock washer				1	
	67	Lock nut		Thread: M8		1	
-		Kit, coupling			00415061	1	pcs
	9	Hex socket head cap screw		Designation: DIN 912		4	
				Length (mm): 20			
				Thread: M6			
	10a	Coupling half				2	
	10	Shaft pin		Diameter: 5		1	
				Length (mm): 26			
-		Kit, coupling guard			96505130	1	pcs
	7.a	Combi Slot Torx screw				4	
	7	Coupling guard				2	
-		Kit, gaskets			96455090	1	pcs
	37	O-ring				2	
	38	O-ring				1	
	38	O-ring				2	
	109	O-ring		Diameter: 22,00		1	
				Material type: EPDM			
				Thickness: 2,75			
-		Kit, plug			96505133	1	pcs
-	18	Air vent screw				1	
		Spindle					1
		Plug					1
	23b	Spindle				1	
	25	Plug				1	
	25	Plug				1	

Pos	Omschrijving	Opmerking tekst	Classificatie Gegevens	Onderdeelnr.	Aanta	Eenheid
38	O-ring				1	
38	O-ring				2	
38	O-ring		Diameter: 16,3		1	
			Material type: FKM			
			Thickness: 2,4			
38	O-ring		Diameter: 16,3		2	
			Material type: FKM			
			Thickness: 2,4			
-	Kit, shaft seal HQQE			96455086	1	pcs
105	Shaft seal		Material type: HQQE		1	
-	Kit, wear parts		Material type: SILICON CARBIDE	96455092	1	pcs
- 4a	Chamber w. bearing cpl.				2	
	Vane					1
	Retainer					1
	Guide vane					6
4a	Intermediate chamber					1
45	Neck ring					1
47	Bearing bush					1
65	Retainer for seal ring					1
65	Neck ring retainer					1
45	Neck ring				17	
47a	Bearing ring				2	
64d	Spacing pipe		Internal diameter: 12,85		2	
			Outer diameter: 15,85			
			Length (mm): 4,50			
64c	Clamp, splined		Internal diameter: 8,5		1	
			Outer diameter: 15			
65	Neck ring retainer				17	
66	Wedge lock washer				1	
67	Lock nut		Thread: M8		1	
441 b	Gasket				2	
-	Base cpl.			98880759	1	pcs
6	Base			96588143	1	
56	Base plate			96588141	1	
440 b	Lock ring			98918331	2	
-	Motor			85904365	1	pcs
-	Kit, Ball bearing			96279741	1	
111	Ball bearing		Designation: 6304.2Z.C3.SYN			1
111	Ball bearing					1
157	O-ring		Diameter: 32			1
			Material type: NBR			
			Thickness: 2			
158	Waved washer					1
-	Kit, fan			96279721	1	
156	Fan					1
159 a	Seal ring					1
-	Kit, fan cover			96279720	1	
151	Fan cover					1
152	Pan head thread forming screw					2
-	Kit, flange			96279854	1	
156 b	Flange					1
159c	Seal ring					1
184	Gasket		Internal diameter: 114,80			1
			Outer diameter: 121,20			
			Thickness: 0,25			
185	Pan head screw					4
186	Drain plug					1
-	Kit, shaft seal			96279722	1	

Pos	Omschrijving	Opmerking tekst	Classificatie Gegevens	Onderdeelnr.	Aanta	Eenheid
159c	Seal ring					1
159 a	Seal ring					1
-	Kit, terminal box			96279724	1	
152	Pan head thread forming screw					4
164 a	Terminal box w/gasket					1
164	Terminal box cover w/gasket					1
173 a	Washer		Designation: SQUARE			1
			Internal diameter: 5,5			
			Outer diameter: 10X10			
			Thickness: 1,5			
173 a	Base					1
173	Pan head thread forming screw		Designation: COMBI TORX T25			1
173	Pan head screw		Designation: DIN 7985			1
175	Pan head screw		Designation: DIN 7985			2
176	Terminal cpl.					1
-	Motor			85900456	1	pcs
-	Kit, Ball bearing			96279741	1	
111	Ball bearing		Designation: 6304.2Z.C3.SYN			1
111	Ball bearing					1
157	O-ring		Diameter: 32			1
			Material type: NBR			
			Thickness: 2			
158	Waved washer					1
-	Kit, Ball bearing			96279741	1	
111	Ball bearing		Designation: 6304.2Z.C3.SYN			1
111	Ball bearing					1
157	O-ring		Diameter: 32			1
			Material type: NBR			
			Thickness: 2			
158	Waved washer					1
-	Kit, capacitor			96279731	1	
161	Capacitor					1
164 a	Terminal box w/gasket					1
164	Terminal box cover w/gasket					1
-	Kit, fan			96279740	1	
156	Fan					1
159 a	Seal ring					1
-	Kit, fan cover			96279720	1	
151	Fan cover					1
152	Pan head thread forming screw					2
-	Kit, flange			96279854	1	
156 b	Flange					1
159c	Seal ring					1
184	Gasket		Internal diameter: 114,80			1
			Outer diameter: 121,20			
			Thickness: 0,25			
185	Pan head screw					4
186	Drain plug					1
-	Kit, shaft seal			96279722	1	
159c	Seal ring					1
159 a	Seal ring					1
-	Kit, terminal box			96279725	1	
152	Pan head thread forming screw					4
164 a	Terminal box w/gasket					1

Pos	Omschrijving	Opmerking tekst	Classificatie Gegevens	Onderdeelnr.	Aanta	Eenheid
164	Terminal box cover w/gasket				1	
166	Pan head screw				4	
173 a	Washer		Designation: SQUARE		1	
			Internal diameter: 5,5			
			Outer diameter: 10X10			
			Thickness: 1,5			
173 a	Base				1	
173	Pan head thread forming screw		Designation: COMBI TORX T25		1	
173	Pan head screw		Designation: DIN 7985		1	
175	Pan head screw		Designation: DIN 7985		4	
176	Terminal cpl.				1	
2	Pump cover			96588244	1	pcs
- 4a	Chamber w. bearing cpl.			97690603	2	pcs
65	Retainer for seal ring			99812852	1	
4a	Chamber w. bearing cpl.			98371226	2	pcs
- 4	Chamber cpl.			97690021	16	pcs
45	Neck ring			96536194	1	
65	Neck ring retainer			99490745	1	
65	Neck ring retainer			99490747	1	
4	Chamber cpl.			96547663	16	pcs
4	Chamber cpl.			98371223	16	pcs
5a	Chamber cpl.			98371222	1	pcs
5a	Chamber cpl.			97564654	1	pcs
7.a	Combi Slot Torx screw			96886324	4	pcs
10	Shaft pin		Diameter: 5	96536473	1	pcs
			Length (mm): 26			
10	Shaft pin		Diameter: 5	96587588	1	pcs
			Length (mm): 26			
18	Air vent screw			96547461	1	pcs
18	Air vent screw			95061351	1	pcs
- 25a	Drain plug w/bypass valve			96588243	1	pcs
38	O-ring			99198815	1	
38	O-ring			99412727	1	
25	Plug			96536013	1	pcs
26	Staybolt		Length (mm): 439	98985619	4	pcs
			Thread: M12			
28	Hex head screw		Length (mm): 25 MM	92529866	4	pcs
			Thread: M6			
32	Washer		Designation: DIN 125 A2	99944263	4	pcs
			Internal diameter: 13			
			Outer diameter: 24			
			Thickness: 2,5			
37	O-ring			96547656	2	pcs
38	O-ring			99198815	2	pcs
38	O-ring			99412727	2	pcs
44a	Guide vane			98488445	1	pcs
47a	Bearing ring			97905743	2	pcs
47a	Bearing ring			96547649	2	pcs
49	Impeller cpl.			98287177	19	pcs
49	Impeller cpl.			96547666	19	pcs
49	Impeller cpl.			98394399	19	pcs
51	Shaft, spline, cpl.			98368520	1	pcs
55	Outer sleeve			98811311	1	pcs
60	Formed wire spring			99935918	1	pcs
64c	Clamp, splined		Internal diameter: 8,5	98496968	1	pcs
			Outer diameter: 15			
64a	Spacing pipe			96536198	16	pcs
66	Wedge lock washer			96536157	1	pcs
66	Wedge lock washer			92575609	1	pcs
67	Lock nut		Thread: M8	98277008	1	pcs
105	Shaft seal		Material type: HQQE	96983415	1	pcs