Inventflow: Grundfos A-partner

Grundfos CRN 3-5 A-P-A-E-HQQE

Find the pump here:
https://inventflow.nl/en/pompenfilter/crn/grundfos-crn-3-5-a-p-a-e-hqqe

Contact

info@inventflow.nl
+31 (0) 546 45 80 72

Datasheet

Qty.	Description
1	**CRN 3-5 A-P-A-E-HQQE**

Product No.: 96516899
Vertical, non-self-priming, multistage, in-line, centrifugal pump for installation in pipe systems and mounting on a foundation.

The pump has the following characteristics:
- Impellers, intermediate chambers and outer sleeve are made of

Impeller: Stainless steel, EN 1.4401.
- Pump head cover and base are made of

Pump housing: Stainless steel, EN 1.4408.
- The shaft seal has assembly length according to EN 12756.
- Power transmission is via cast iron split coupling.

Flange standard: - Pipework connection is via PJE flanges/couplings.

Phase: The motor is a 3-phase AC motor.

Controls:
Frequency converter: NONE

Liquid:
Pumped liquid: Water
Liquid temperature range: -20 .. 120 °C
Selected liquid temperature: 20 °C
Density: 998.2 kg/m³

Technical:
Pump speed on which pump data are based: 2873 rpm
Rated flow: 3 m³/h
Rated head: 23.4 m
Pump orientation: Vertical
Shaft seal arrangement: Single
Code for shaft seal: HQQE
Approvals on nameplate: CE,EAC,UKCA,WRAS,ACS
Curve tolerance: ISO9906:2012 3B

Materials:
Base: Stainless steel
EN 1.4408
AISI 316
Impeller: Stainless steel
EN 1.4401
AISI 316
Bearing: SIC

Installation:
Maximum ambient temperature: 60 °C
Maximum operating pressure: 25 bar
Max pressure at stated temp: 25 bar / 120 °C
25 bar / -20 °C
Type of connection: PJE

Qty.	Description	
	Size of inlet connection:	DN 32
	Size of outlet connection:	DN 32
	Pressure rating for connection:	PN 50
	Flange size for motor:	FT85
	Electrical data:	
	Motor standard:	IEC
	Motor type:	71A
	IE Efficiency class:	IE3
	Rated power - P2:	0.37 kW
	Power (P2) required by pump:	0.37 kW
	Mains frequency:	50 Hz
	Rated voltage:	3 x 220-240D/380-415Y V
	Rated current:	1.74/1.00 A
	Starting current:	490-530 %
	Cos phi - power factor:	0.80-0.70
	Rated speed:	2850-2880 rpm
	Efficiency:	IE3 73,8%
	Motor efficiency at full load:	73.8 %
	Motor efficiency at 3/4 load:	79.0 %
	Motor efficiency at 1/2 load:	75.5 %
	Number of poles:	2
	Enclosure class (IEC 34-5):	55 Dust/Jetting
	Insulation class (IEC 85):	F
	Motor No:	85805102
	Others:	
	Minimum efficiency index, MEI ≥:	0.70
	Net weight:	17.4 kg
	Gross weight:	20.1 kg
	Shipping volume:	0.054 m³
	Danish VVS No.:	385911005
	Norwegian NRF no.:	9040463
	Country of origin:	HU
	Custom tariff no.:	84137075

96516899 CRN 3-5 A-P-A-E-HQQE 50 Hz

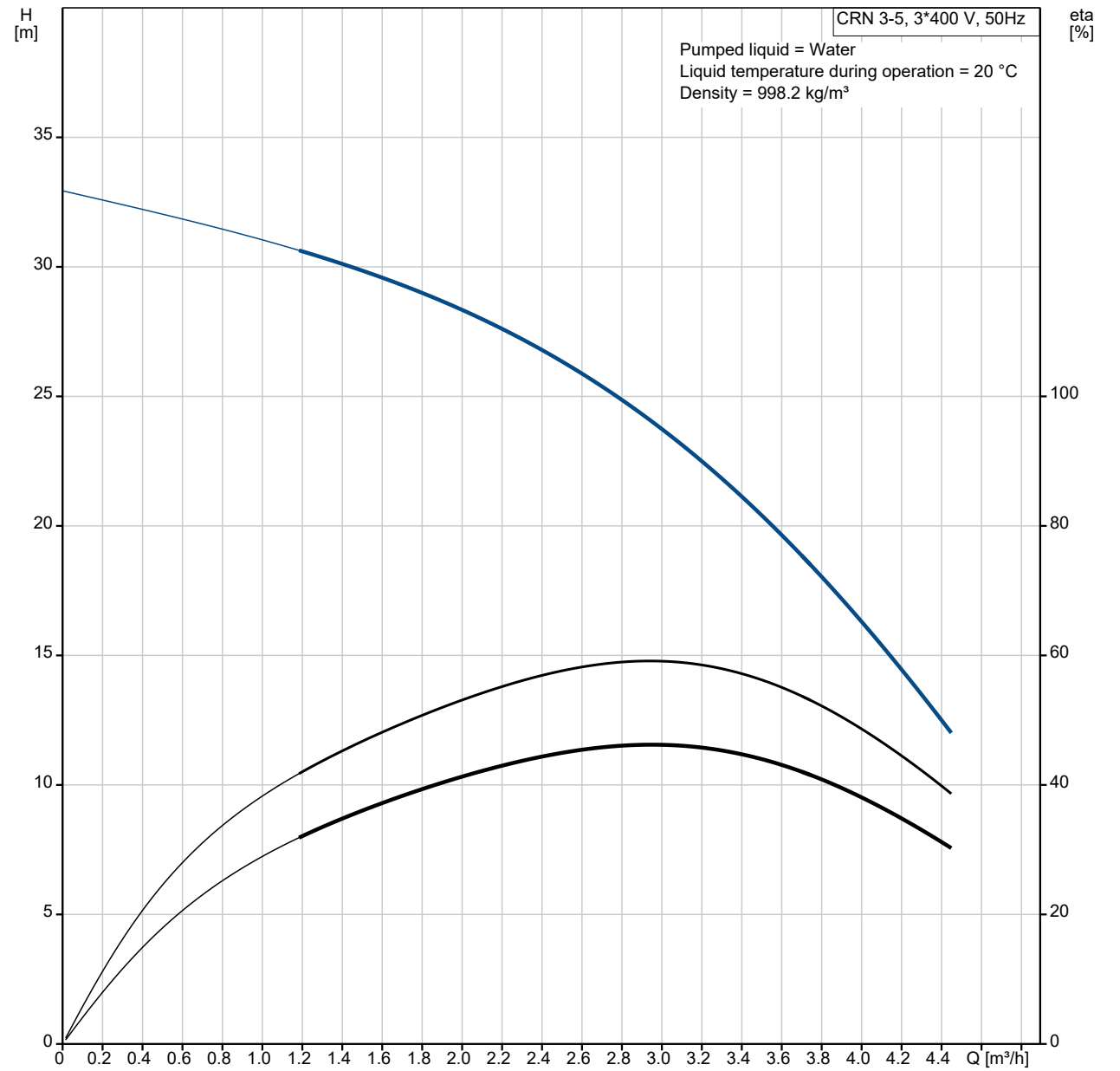

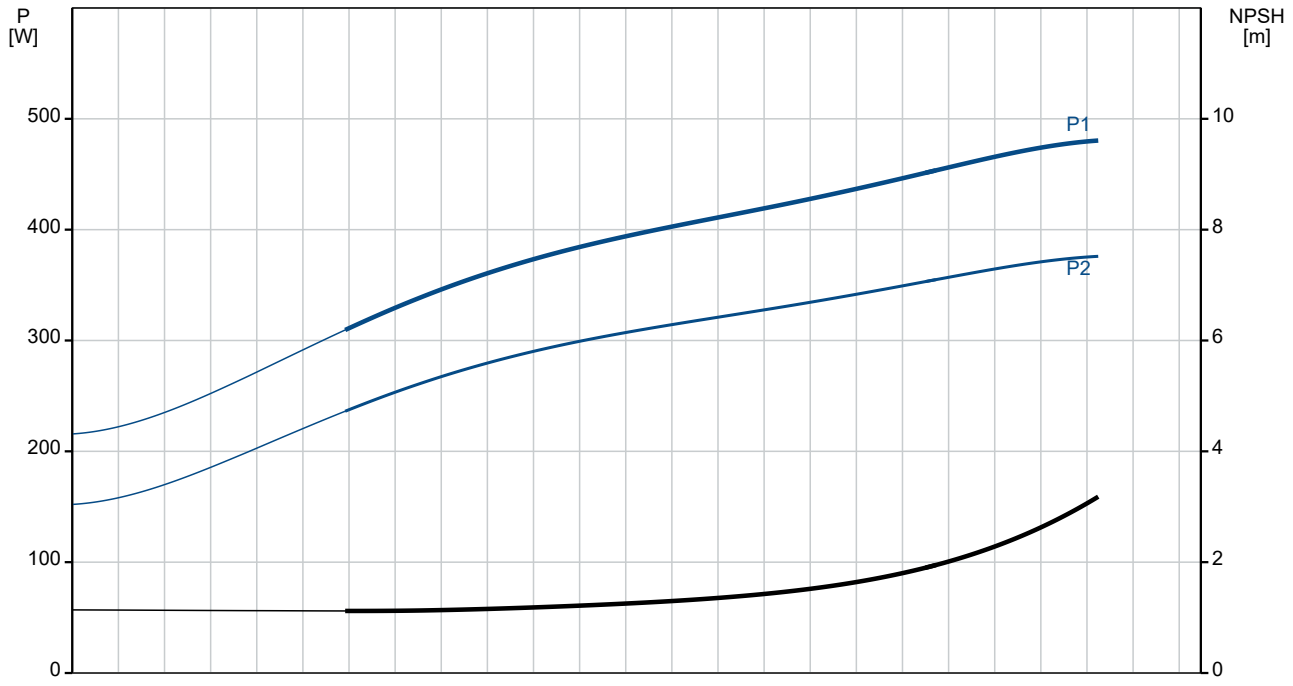

Description	Value
General information:	
Product name:	CRN 3-5 A-P-A-E-HQQE
Product No:	96516899
EAN number:	5700396752099
Technical:	
Pump speed on which pump data are based:	2873 rpm
Rated flow:	3 m³/h
Rated head:	23.4 m
Maximum head:	32.3 m
Stages:	5
Impellers:	5
Number of reduced-diameter impellers:	0
Low NPSH:	N
Pump orientation:	Vertical
Shaft seal arrangement:	Single
Code for shaft seal:	HQQE
Approvals on nameplate:	CE,EAC,UKCA,WRAS,ACS
Curve tolerance:	ISO9906:2012 3B
Pump version:	A
Model:	A
Materials:	
Base:	Stainless steel
Base:	EN 1.4408
Base:	AISI 316
Impeller:	Stainless steel
Impeller:	EN 1.4401
Impeller:	AISI 316
Material code:	A
Code for rubber:	E
Bearing:	SIC
Installation:	
Maximum ambient temperature:	60 °C
Maximum operating pressure:	25 bar
Max pressure at stated temp:	25 bar / 120 °C
Max pressure at stated temp:	25 bar / -20 °C
Type of connection:	PJE
Size of inlet connection:	DN 32
Size of outlet connection:	DN 32
Pressure rating for connection:	PN 50
Flange size for motor:	FT85
Connect code:	P
Liquid:	
Pumped liquid:	Water
Liquid temperature range:	-20 .. 120 °C
Selected liquid temperature:	20 °C
Density:	998.2 kg/m³
Electrical data:	
Motor standard:	IEC
Motor type:	71A
IE Efficiency class:	IE3
Rated power - P2:	0.37 kW
Power (P2) required by pump:	0.37 kW
Mains frequency:	50 Hz
Rated voltage:	3 x 220-240D/380-415Y V
Rated current:	1.74/1.00 A
Starting current:	490-530 %
Cos phi - power factor:	0.80-0.70
Rated speed:	2850-2880 rpm
Efficiency:	IE3 73,8%
Motor efficiency at full load:	73.8 %
Motor efficiency at 3/4 load:	79.0 %

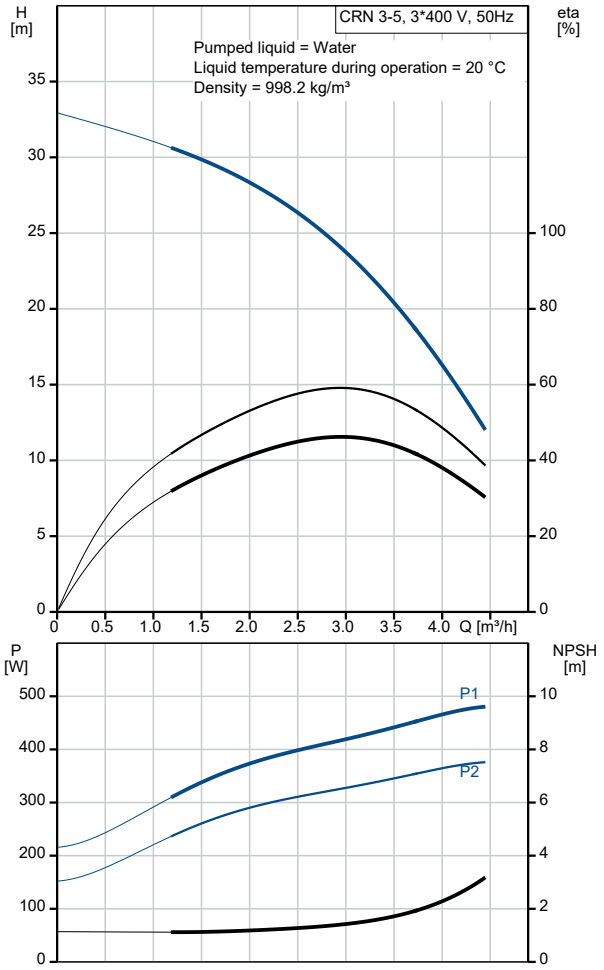

Description	Value
Motor efficiency at 1/2 load:	75.5 %
Number of poles:	2
Enclosure class (IEC 34-5):	55 Dust/Jetting
Insulation class (IEC 85):	F
Motor protec:	NONE
Motor No:	85805102
Controls:	
Frequency converter:	NONE
Others:	
Minimum efficiency index, MEI ≥:	0.70
Net weight:	17.4 kg
Gross weight:	20.1 kg
Shipping volume:	0.054 m³
Danish VVS No.:	385911005
Norwegian NRF no.:	9040463
Country of origin:	HU
Custom tariff no.:	84137075

96516899 CRN 3-5 A-P-A-E-HQQE 50 Hz

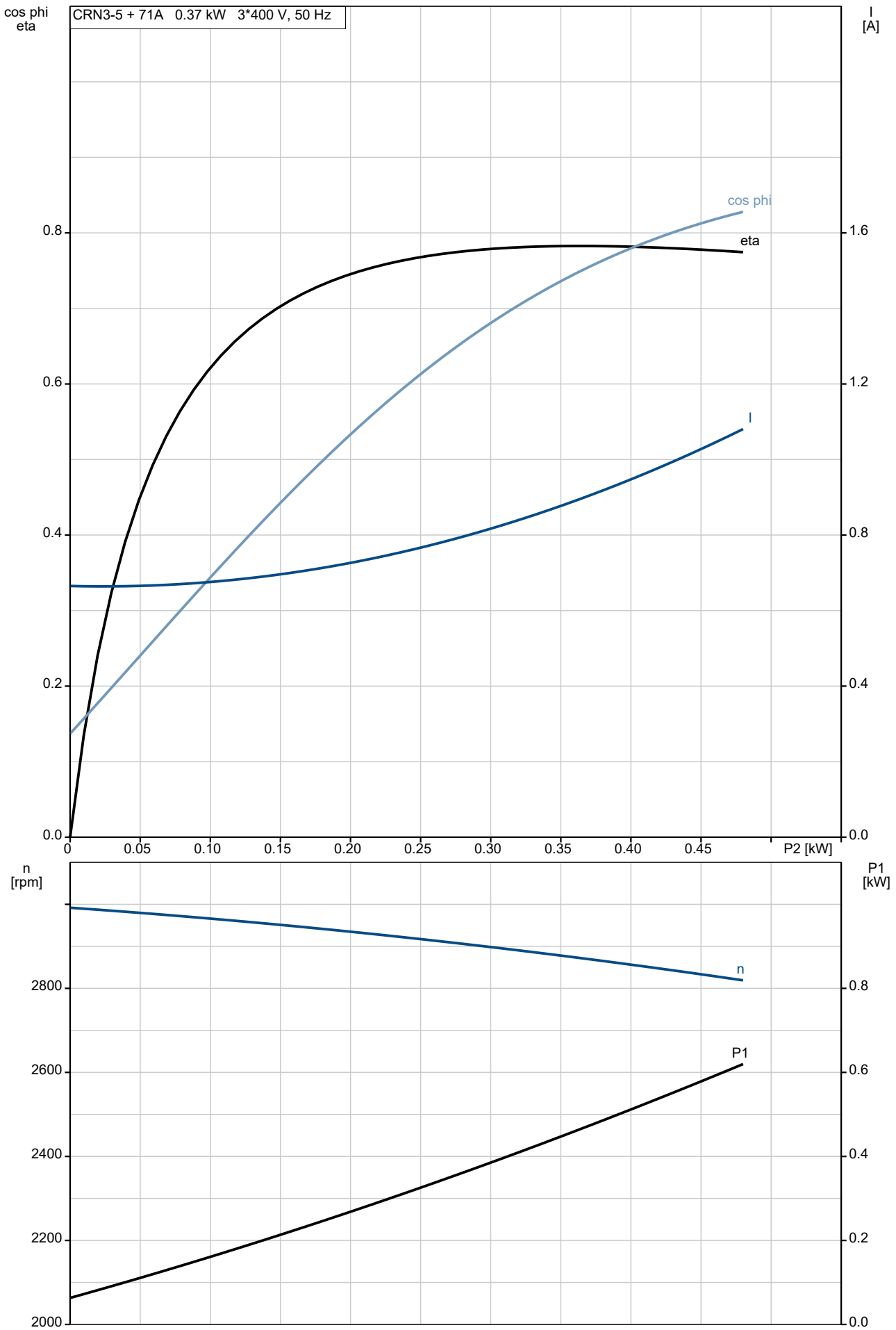

96516899 CRN 3-5 A-P-A-E-HQQE 50 Hz

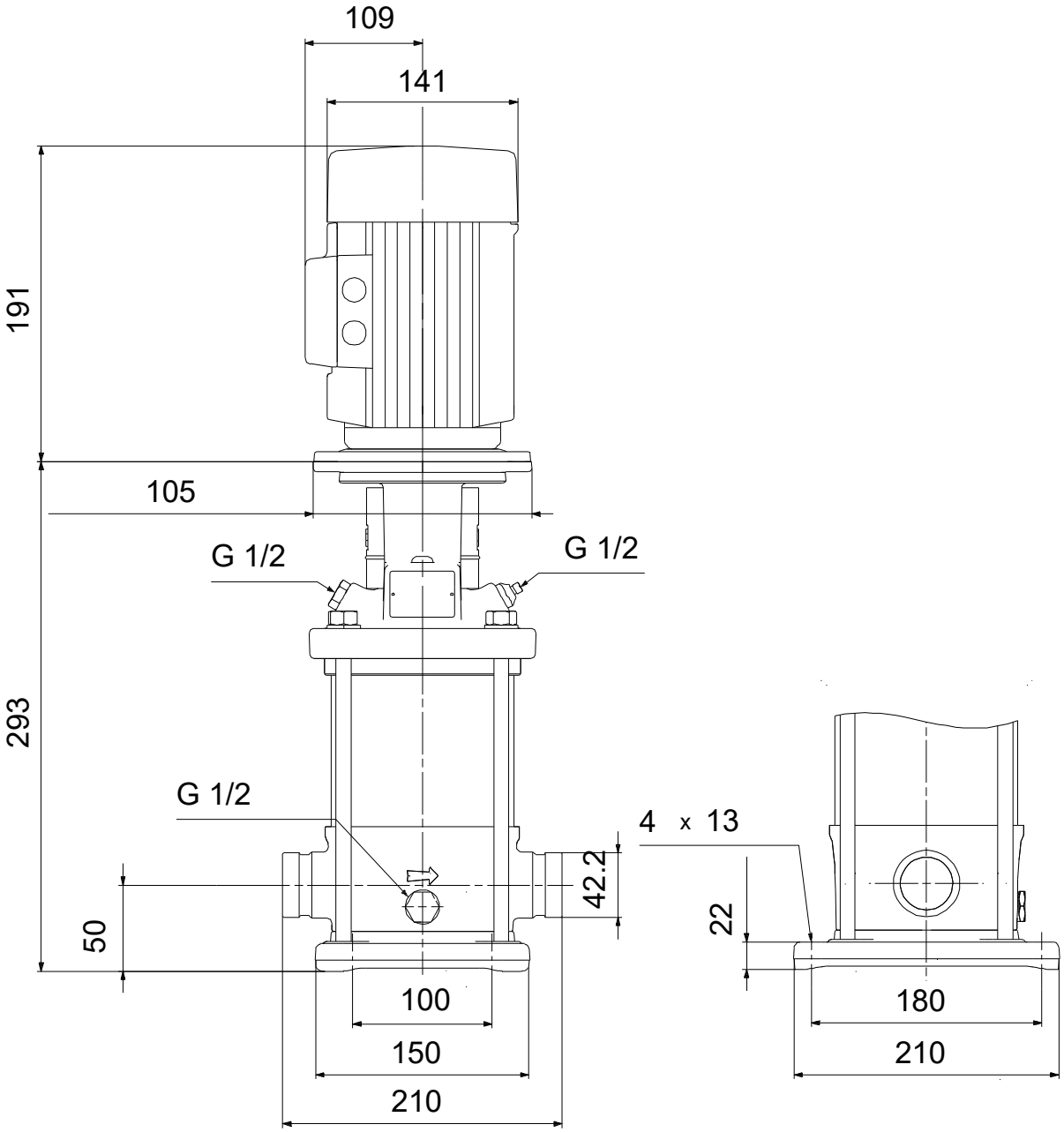

Note! All units are in [mm] unless others are stated.
Disclaimer: This simplified dimensional drawing does not show all details.

Spare parts CRN 3-5, Product No. 96516899
Produced After 0401 (production year and week number)

Pos	Omschrijving	Opmerking tekst	Classificatie Gegevens	Onderdeelnr.	Aanta	Eenheid
-	Kit, chamber stack		Bearing type: SILICON CARBIDE	96453555	1	pcs
- 4a	Chamber w. bearing cpl.				1	
	Vane					1
	Retainer					1
	Guide vane					6
4a	Intermediate chamber					1
45	Neck ring					1
47	Bearing bush					1
65	Retainer for seal ring					1
65	Neck ring retainer					1
- 4	Chamber cpl.				3	
4a	Intermediate chamber					1
45	Neck ring					1
65	Neck ring retainer					1
- 5a	Chamber cpl.				1	
	Vane					1
4a	Intermediate chamber					1
45	Neck ring					1
65	Retainer for seal ring					1
65	Neck ring retainer					1
- 44a	Guide vane cpl.				1	
	Plate					1
	Guide vane					6
50	Top plate					1
47a	Bearing ring				1	
49	Impeller cpl.				5	
51	Shaft, spline, cpl.				1	
64d	Spacing pipe		Internal diameter: 12,85		1	
			Outer diameter: 15,85			
			Length (mm): 4,50			
64c	Clamp, splined		Internal diameter: 8,5		1	
			Outer diameter: 15			
64a	Spacing pipe				3	
66	Wedge lock washer				1	
67	Lock nut		Thread: M8		1	
-	Kit, coupling			00415060	1	pcs
9	Hex socket head cap screw		Designation: DIN 912		4	
			Length (mm): 20			
			Thread: M6			
10a	Coupling half				2	
10	Shaft pin		Diameter: 5		1	
			Length (mm): 26			
-	Kit, coupling guard			96505130	1	pcs
7.a	Combi Slot Torx screw				4	
7	Coupling guard				2	
-	Kit, gaskets			96455090	1	pcs
37	O-ring				2	
38	O-ring				1	
38	O-ring				2	
109	O-ring		Diameter: 22,00		1	
			Material type: EPDM			
			Thickness: 2,75			
-	Kit, plug			96505133	1	pcs
- 18	Air vent screw				1	
	Spindle					1
	Plug					1
23b	Spindle				1	
25	Plug				1	

Pos	Omschrijving	Opmerking tekst	Classificatie Gegevens	Onderdeelnr.	Aanta	Eenheid
25	Plug				1	
38	O-ring				1	
38	O-ring				2	
38	O-ring		Diameter: 16,3		1	
			Material type: FKM			
			Thickness: 2,4			
38	O-ring		Diameter: 16,3		2	
			Material type: FKM			
			Thickness: 2,4			
-	Kit, shaft seal HQQE			96455086	1	pcs
105	Shaft seal		Material type: HQQE		1	
-	Kit, wear parts		Material type: SILICON CARBIDE	96455095	1	pcs
- 4a	Chamber w. bearing cpl.				1	
	Vane					1
	Retainer					1
	Guide vane					6
4a	Intermediate chamber					1
45	Neck ring					1
47	Bearing bush					1
65	Retainer for seal ring					1
65	Neck ring retainer					1
45	Neck ring				8	
47a	Bearing ring				1	
64d	Spacing pipe		Internal diameter: 12,85		1	
			Outer diameter: 15,85			
			Length (mm): 4,50			
64c	Clamp, splined		Internal diameter: 8,5		1	
			Outer diameter: 15			
65	Neck ring retainer				8	
66	Wedge lock washer				1	
67	Lock nut		Thread: M8		1	
441 b	Gasket				2	
-	Motor			85900331	1	pcs
-	Kit, Ball bearing			96279730	1	
111	Ball bearing		Designation: 6204.2Z.C3.SYN			1
111	Ball bearing					1
157	O-ring		Diameter: 32			1
			Material type: NBR			
			Thickness: 2			
158	Waved washer					1
	Kit, fan			96279721	1	
	Kit, fan cover			96279720	1	
-	Kit, flange			96279727	1	
156 b	Flange					1
159c	Seal ring					1
184	Gasket		Internal diameter: 114,80			1
			Outer diameter: 121,20			
			Thickness: 0,25			
185	Pan head screw					4
186	Drain plug					1
	Kit, shaft seal			96279722	1	
-	Kit, terminal box			96279724	1	
152	Pan head thread forming screw					4
164 a	Terminal box w/gasket					1
164	Terminal box cover w/gasket					1
173 a	Washer		Designation: SQUARE			1
			Internal diameter: 5,5			
			Outer diameter: 10X10			
			Thickness: 1,5			

Pos	Omschrijving	Opmerking tekst	Classificatie Gegevens	Onderdeelnr.	Aanta	Eenheid
173 a	Base					1
173	Pan head thread forming screw		Designation: COMBI TORX T25			1
173	Pan head screw		Designation: DIN 7985			1
175	Pan head screw		Designation: DIN 7985			2
176	Terminal cpl.					1
1a	Pump head			96588196	1	pcs
2	Pump cover			96588244	1	pcs
- 4a	Chamber w. bearing cpl.			97690603	1	pcs
65	Retainer for seal ring			99812852	1	
4a	Chamber w. bearing cpl.			98371226	1	pcs
- 4	Chamber cpl.			97690021	3	pcs
45	Neck ring			96536194	1	
65	Neck ring retainer			99490745	1	
65	Neck ring retainer			99490747	1	
4	Chamber cpl.			96547663	3	pcs
4	Chamber cpl.			98371223	3	pcs
5a	Chamber cpl.			98371222	1	pcs
5a	Chamber cpl.			97564654	1	pcs
6	Base			96588139	1	pcs
7.a	Combi Slot Torx screw			96886324	4	pcs
10	Shaft pin		Diameter: 5	96536473	1	pcs
			Length (mm): 26			
10	Shaft pin		Diameter: 5	96587588	1	pcs
			Length (mm): 26			
18	Air vent screw			96547461	1	pcs
18	Air vent screw			95061351	1	pcs
- 25a	Drain plug w/bypass valve			96588243	1	pcs
38	O-ring			99198815	1	
38	O-ring			99412727	1	
25	Plug			96536013	1	pcs
26	Staybolt		Length (mm): 187	98985585	4	pcs
			Thread: M12			
32	Washer		Designation: DIN 125 A2	99944263	4	pcs
			Internal diameter: 13			
			Outer diameter: 24			
			Thickness: 2,5			
37	O-ring			96547656	2	pcs
38	O-ring			99198815	2	pcs
38	O-ring			99412727	2	pcs
44a	Guide vane cpl.			98928568	1	pcs
47a	Bearing ring			97905743	1	pcs
47a	Bearing ring			96547649	1	pcs
49	Impeller cpl.			98271529	5	pcs
49	Impeller cpl.			96547601	5	pcs
49	Impeller cpl.			98394417	5	pcs
51	Shaft, spline, cpl.			96588230	1	pcs
55	Outer sleeve			98811300	1	pcs
56	Base plate			96588142	1	pcs
60	Formed wire spring			99935918	1	pcs
64c	Clamp, splined		Internal diameter: 8,5	98496968	1	pcs
			Outer diameter: 15			
64a	Spacing pipe			96536198	3	pcs
66	Wedge lock washer			96536157	1	pcs
66	Wedge lock washer			92575609	1	pcs
67	Lock nut		Thread: M8	98277008	1	pcs
105	Shaft seal		Material type: HQQE	96983415	1	pcs