Inventflow: Grundfos A-partner

Grundfos TP 100-120/2 A-F-Z-BQQE-IX1

Find the pump here:
https://inventflow.nl/en/pompenfilter/tp/grundfos-tp-100-120-2-a-f-z-bqqe-ix1

Contact

info@inventflow.nl
+31 (0) 546 45 80 72

Datasheet

Qty.	Description
1	**TP 100-120/2 A-F-Z-BQQE-IX1**

Note! Product picture may differ from actual product

Product No.: 97799564

Single-stage centrifugal volute in-line single-head pump:
- neck rings and impeller made of stainless steel
- cataphoresis treatment
- shell coupling
- top-pull-out principle for easy maintenance
- optimized hydraulics
- in-line design with opposite suction and discharge ports enabling mounting in pipework or on a concrete foundation
- corrosion resistant maintenance-free mechanical shaft seal.

Phase:	The motor is a 3-phase AC motor.
Controls:	
Frequency converter:	NONE
Liquid:	
Pumped liquid:	Water
Liquid temperature range:	-25 .. 120 °C
Selected liquid temperature:	20 °C
Density:	998.2 kg/m³
Technical:	
Pump speed on which pump data are based:	2910 rpm
Rated flow:	72.8 m³/h
Rated head:	7.8 m
Actual impeller diameter:	104 mm
Code for shaft seal:	BQQE
Curve tolerance:	ISO9906:2012 3B2
Materials:	
Pump housing:	Bronze CuSn10 ASTM B505
Impeller:	Stainless steel EN 1.4301 AISI 304
Installation:	
Range of ambient temperature:	-30 .. 60 °C
Maximum operating pressure:	10 bar
Max pressure at stated temp:	10 bar / 120 °C
Type of connection:	DIN
Size of connection:	DN 100

Qty.	Description	
	Pressure rating for connection:	PN 10
	Port-to-port length:	450 mm
	Flange size for motor:	FT115
	Electrical data:	
	Motor type:	90LE
	IE Efficiency class:	IE3
	Rated power - P2:	2.2 kW
	Mains frequency:	50 Hz
	Rated voltage:	3 x 380-415D V
	Rated current:	4.65 A
	Starting current:	840-920 %
	Cos phi - power factor:	0.86-0.80
	Rated speed:	2890-2910 rpm
	Efficiency:	IE3 85,9%
	Motor efficiency at full load:	85.9-85.9 %
	Motor efficiency at 3/4 load:	88.2 %
	Motor efficiency at 1/2 load:	88.0 %
	Number of poles:	2
	Enclosure class (IEC 34-5):	55 Dust/Jetting
	Insulation class (IEC 85):	F
	Motor No:	85U11908
	Others:	
	Minimum efficiency index, MEI ≥:	0.70
	Net weight:	64.7 kg
	Gross weight:	73.3 kg
	Shipping volume:	0.2 m^3
	Country of origin:	HU
	Custom tariff no.:	84137051

97799564 TP 100-120/2 A-F-Z-BQQE-IX1 50 Hz

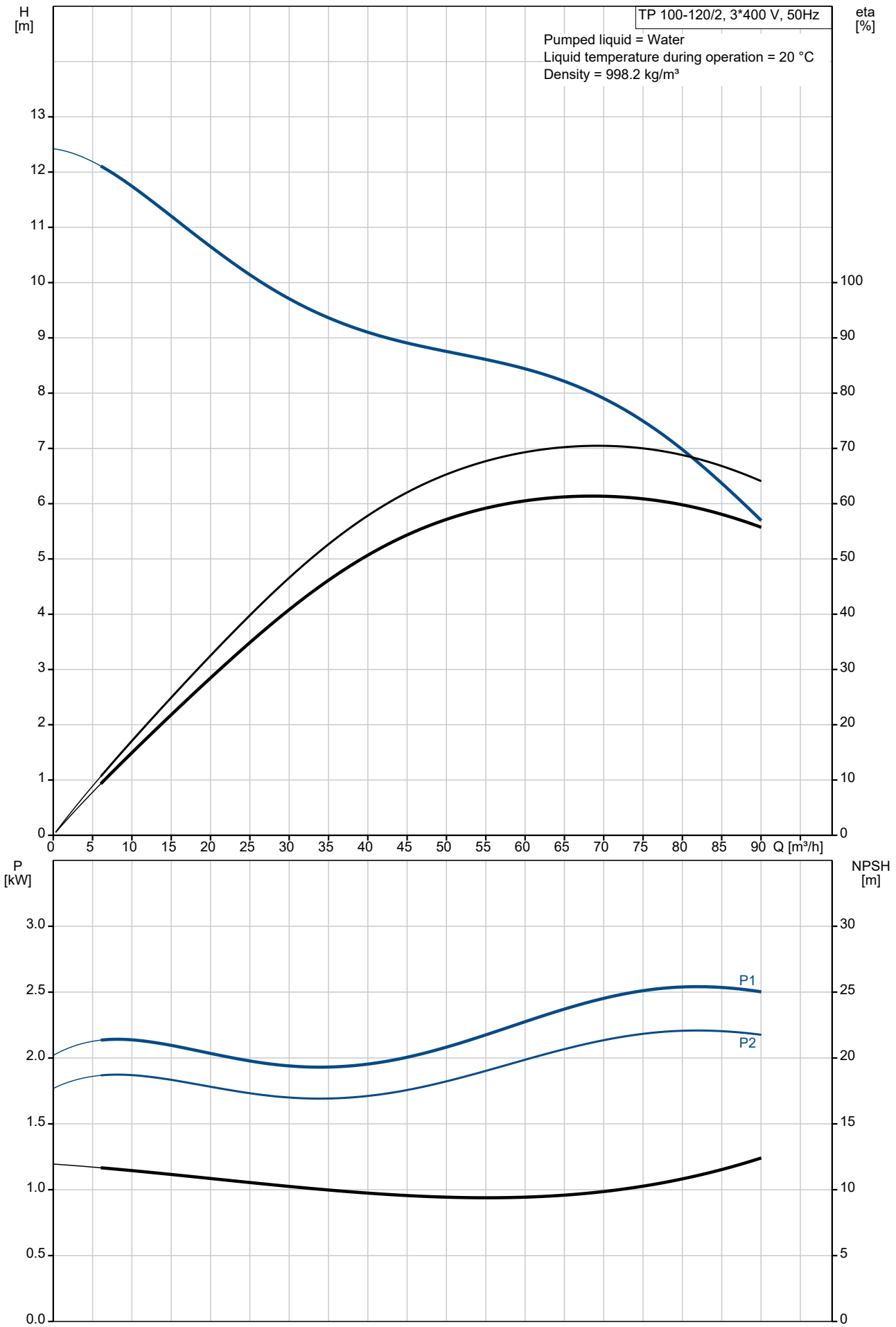

Description	Value
General information:	
Product name:	TP 100-120/2 A-F-Z-BQQE-IX1
Product No:	97799564
EAN number:	5710625142843
Technical:	
Pump speed on which pump data are based:	2910 rpm
Rated flow:	72.8 m³/h
Rated head:	7.8 m
Maximum head:	120 dm
Actual impeller diameter:	104 mm
Code for shaft seal:	BQQE
Curve tolerance:	ISO9906:2012 3B2
Pump version:	A
Materials:	
Pump housing:	Bronze
Pump housing:	CuSn10
Pump housing:	ASTM B505
Impeller:	Stainless steel
Impeller:	EN 1.4301
Impeller:	AISI 304
Material code:	Z
Installation:	
Range of ambient temperature:	-30 .. 60 °C
Maximum operating pressure:	10 bar
Max pressure at stated temp:	10 bar / 120 °C
Type of connection:	DIN
Size of connection:	DN 100
Pressure rating for connection:	PN 10
Port-to-port length:	450 mm
Flange size for motor:	FT115
Connect code:	F
Liquid:	
Pumped liquid:	Water
Liquid temperature range:	-25 .. 120 °C
Selected liquid temperature:	20 °C
Density:	998.2 kg/m³
Electrical data:	
Motor type:	90LE
IE Efficiency class:	IE3
Rated power - P2:	2.2 kW
Mains frequency:	50 Hz
Rated voltage:	3 x 380-415D V
Rated current:	4.65 A
Starting current:	840-920 %
Cos phi - power factor:	0.86-0.80
Rated speed:	2890-2910 rpm
Efficiency:	IE3 85,9%
Motor efficiency at full load:	85.9-85.9 %
Motor efficiency at 3/4 load:	88.2 %
Motor efficiency at 1/2 load:	88.0 %
Number of poles:	2
Enclosure class (IEC 34-5):	55 Dust/Jetting
Insulation class (IEC 85):	F
Motor protec:	NONE
Motor No:	85U11908
Controls:	
Frequency converter:	NONE
Others:	
Minimum efficiency index, MEI ≥:	0.70
Net weight:	64.7 kg
Gross weight:	73.3 kg
Shipping volume:	0.2 m³

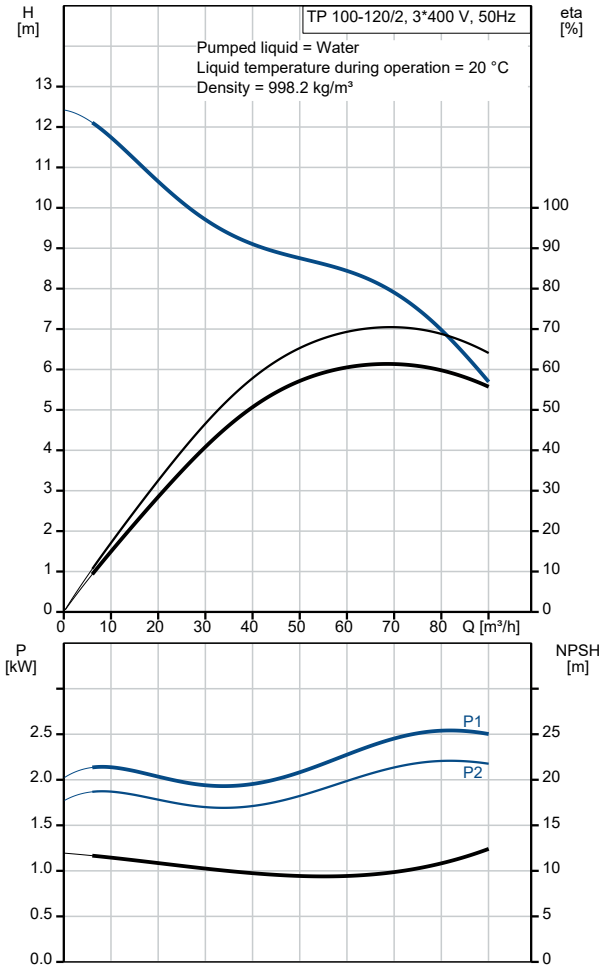

Description	Value
Country of origin:	HU
Custom tariff no.:	84137051

97799564 TP 100-120/2 A-F-Z-BQQE-IX1 50 Hz

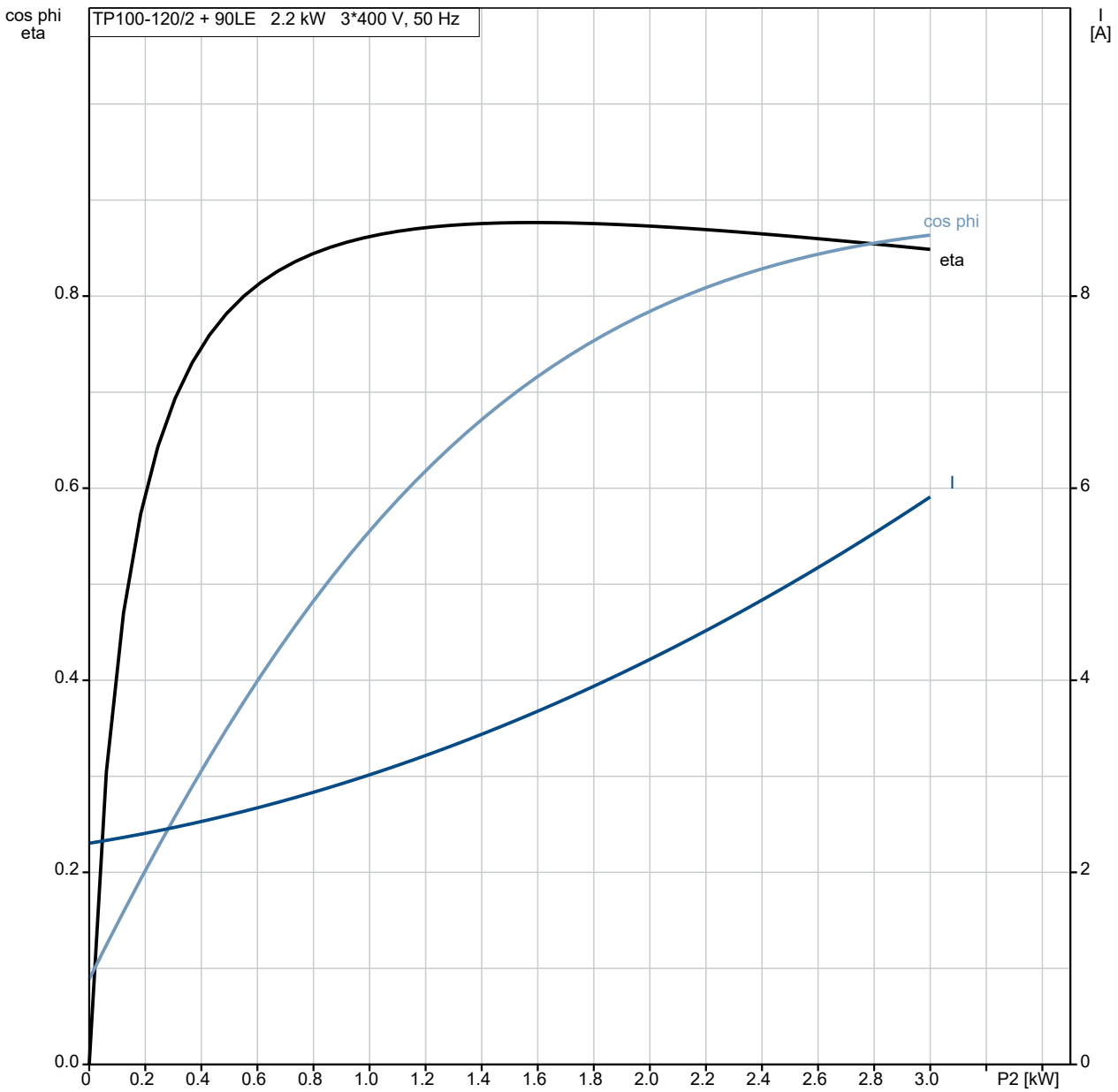

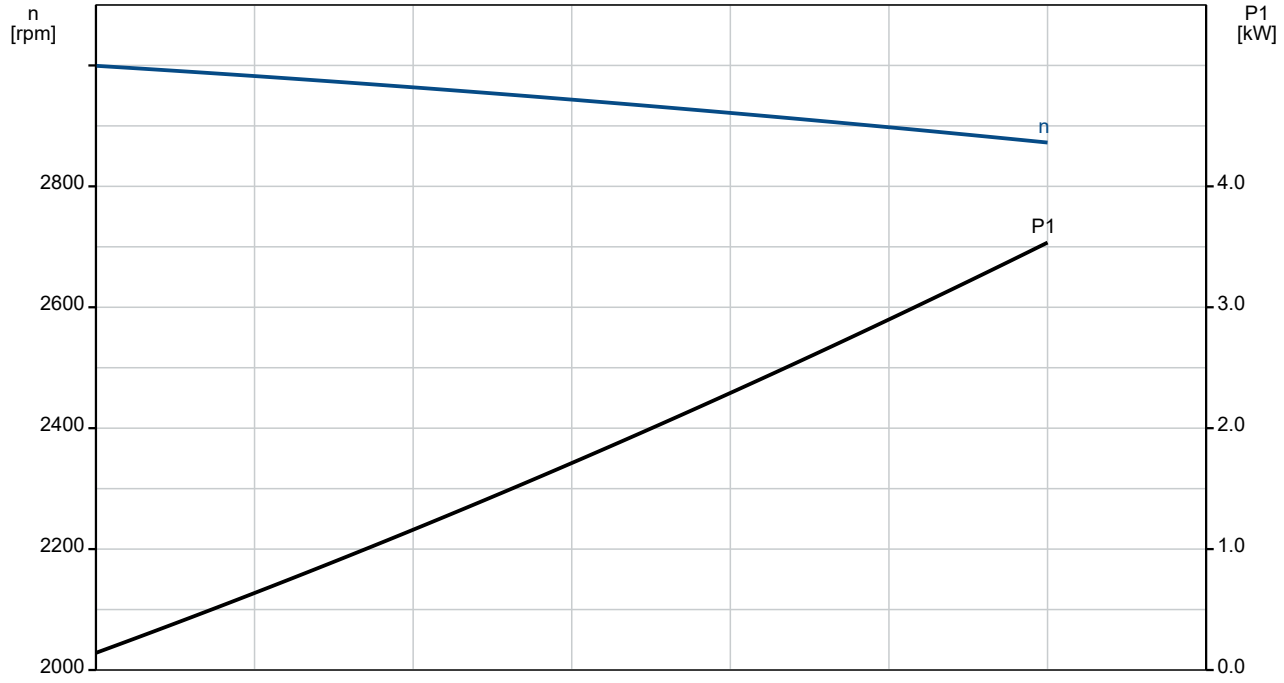

97799564 TP 100-120/2 A-F-Z-BQQE-IX1 50 Hz

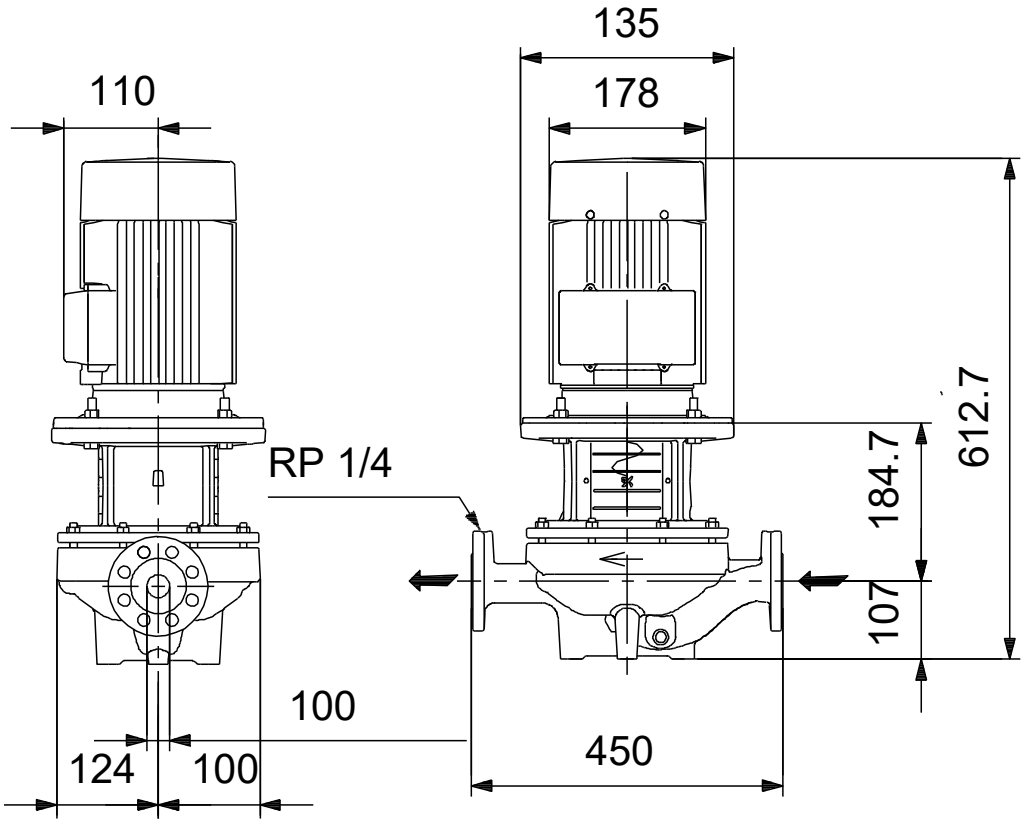

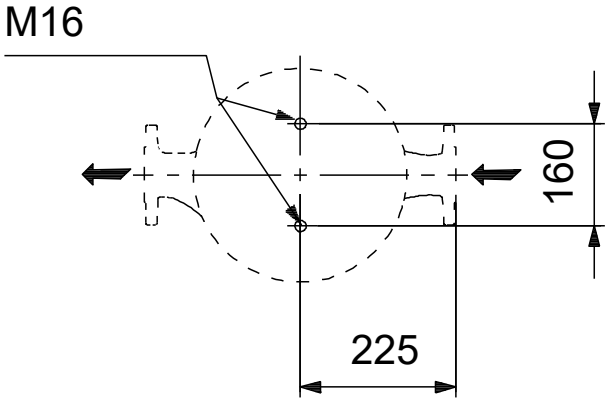

Note! All units are in [mm] unless others are stated.
Disclaimer: This simplified dimensional drawing does not show all details.

Spare parts TP 100-120/2, Product No. 97799564
Produced After 1945 (production year and week number)

Pos	Omschrijving	Opmerking tekst	Classificatie Gegevens	Onderdeelnr.	Aantal	Eenheid
-	Kit, coupling			00339124	1	pcs
9	Hex socket head cap screw		Designation: DIN 912		4	
			Length (mm): 25			
			Thread: M8			
10a	Coupling half				2	
10	Shaft pin		Diameter: 5		1	
			Length (mm): 26			
-	Kit, shaft seal			98313337	1	pcs
	Plug				2	
72a	O-ring		Diameter: 154		1	
			Material type: EPDM			
			Thickness: 4			
72a	O-ring				1	
105	Shaft seal				1	
-	Shaft w/impeller cpl.			98313245	1	pcs
49b	Split cone nut			96547794	1	
49b	Split cone			96547795	1	
49	Impeller			96547859	1	
51	Shaft			96547791	1	
	Pump housing cpl.			98313211	1	pcs
7a	Pan head screw			96536492	4	pcs
7	Coupling guard			96590459	2	pcs
10	Shaft pin		Diameter: 5	96536473	1	pcs
			Length (mm): 26			
10	Shaft pin		Diameter: 5	96587588	1	pcs
			Length (mm): 26			
18	Plug			96620482	1	pcs
18	Plug			98164277	1	pcs
19	Pipe plug		Thread: R 1/4	98163051	2	pcs
28	Hex head screw		Length (mm): 25	99335941	4	pcs
			Thread: M8			
72a	O-ring		Diameter: 154	98163015	1	pcs
			Material type: EPDM			
			Thickness: 4			
- 2099	Motor			99606494	1	pcs
-	Kit, bearing cpl.			96279794	1	
111	Ball bearing					1
154	Ball bearing					1
157	O-ring		Diameter: 52			1
			Material type: NBR			
			Thickness: 3			
158	Waved washer					1
187	Retaining ring					1
188	Retaining ring					1
-	Kit, end shield			96279789	1	
156a	End shield					1
157a	Gasket		Internal diameter: 141,2			1
			Outer diameter: 145,5			
			Thickness: 0,2			
157	O-ring		Diameter: 52			1
			Material type: NBR			
			Thickness: 3			
158	Waved washer					1
159a	Seal ring					1
-	Kit, fan			96279757	1	
156	Fan					1

Pos	Omschrijving	Opmerking tekst	Classificatie Gegevens	Onderdeelnr.	Aantal	Eenheid
159a	Seal ring					1
-	Kit, fan cover			96279755	1	
151	Fan cover					1
152	Pan head thread forming screw					4
-	Kit, flange			96279777	1	
156b	Flange					1
159.c	Seal ring					1
184	Gasket		Internal diameter: 141,2			1
			Outer diameter: 145,5			
			Thickness: 0,2			
186	Drain plug					3
-	Kit, retaining ring			96279798	1	
187	Retaining ring					1
188	Retaining ring					1
-	Kit, shaft seal			96279761	1	
159c	Seal ring					1
159a	Seal ring					1
-	Kit, staybolts			96279792	1	
181	Pan head staybolt					4
-	Kit, terminal board			96279769	1	
	Bracket cpl.					1
163	Hex socket head screw					1
173a	Base					1
173	Pan head thread forming screw		Designation: COMBI TORX T25			1
176	Slot cheese head screw		Designation: COMBI TORX T25			6
			Length (mm): 10			
			Thread: M5			
176	Terminal					1
176	Connecting piece					3
176	Wire clamp					3
176	Terminal board					1
177	Pan head screw					1
-	Kit, terminal box			96279771	1	
164	Terminal box cover w/gasket					1
166	Pan head thread forming screw					4