Inventflow: Grundfos A-partner

Grundfos TP 50-180/2 A-F-Z-BQQE-FX1

Find the pump here:
https://inventflow.nl/en/pompenfilter/tp/grundfos-tp-50-180-2-a-f-z-bqqe-fx1

Contact

info@inventflow.nl
+31 (0) 546 45 80 72

Datasheet

Qty.	Description
1	**TP 50-180/2 A-F-Z-BQQE-FX1**

Note! Product picture may differ from actual product

Product No.: 97959461

Single-stage centrifugal volute in-line single-head pump:
- neck rings and impeller made of stainless steel
- cataphoresis treatment
- shell coupling
- top-pull-out principle for easy maintenance
- optimized hydraulics
- in-line design with opposite suction and discharge ports enabling mounting in pipework or on a concrete foundation
- corrosion resistant maintenance-free mechanical shaft seal.

Phase:	The motor is a 3-phase AC motor.
Controls:	
Frequency converter:	NONE
Liquid:	
Pumped liquid:	Water
Liquid temperature range:	-25 .. 120 °C
Selected liquid temperature:	20 °C
Density:	998.2 kg/m³
Technical:	
Pump speed on which pump data are based:	2850 rpm
Rated flow:	18.3 m³/h
Rated head:	10.2 m
Actual impeller diameter:	100 mm
Code for shaft seal:	BQQE
Curve tolerance:	ISO9906:2012 3B2
Materials:	
Pump housing:	Bronze CuSn10 ASTM B505
Impeller:	Stainless steel EN 1.4301 AISI 304
Installation:	
Range of ambient temperature:	-30 .. 60 °C
Maximum operating pressure:	10 bar
Max pressure at stated temp:	10 bar / 120 °C
Type of connection:	DIN
Size of connection:	DN 50

Qty.	Description	
	Pressure rating for connection:	PN 6/10
	Port-to-port length:	280 mm
	Flange size for motor:	FT100
	Electrical data:	
	Motor type:	80A
	IE Efficiency class:	IE3
	Rated power - P2:	0.75 kW
	Mains frequency:	50 Hz
	Rated voltage:	3 x 220-240D/380-415Y V
	Rated current:	3.30/1.90 A
	Starting current:	580-620 %
	Cos phi - power factor:	0.81-0.71
	Rated speed:	2840-2870 rpm
	Efficiency:	IE3 80,7%
	Motor efficiency at full load:	80.7 %
	Motor efficiency at 3/4 load:	82.7 %
	Motor efficiency at 1/2 load:	81.7 %
	Number of poles:	2
	Enclosure class (IEC 34-5):	55 Dust/Jetting
	Insulation class (IEC 85):	F
	Motor No:	85U05104
	Others:	
	Minimum efficiency index, MEI ≥:	0.70
	Net weight:	30.9 kg
	Gross weight:	34.4 kg
	Shipping volume:	0.08 m³
	Danish VVS No.:	381883180
	Country of origin:	HU
	Custom tariff no.:	84137051

97959461 TP 50-180/2 A-F-Z-BQQE-FX1 50 Hz

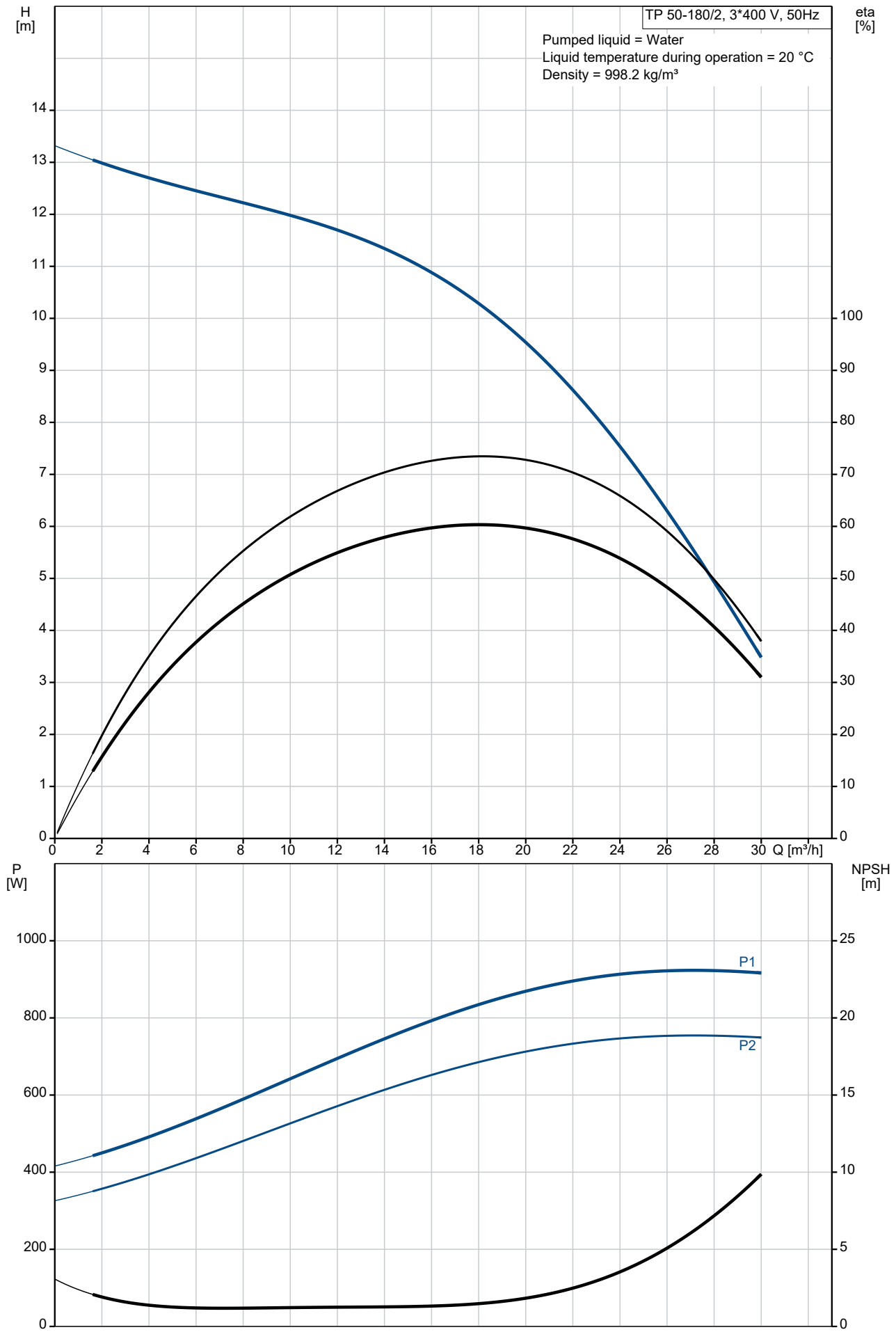

Description	Value
General information:	
Product name:	TP 50-180/2 A-F-Z-BQQE-FX1
Product No:	97959461
EAN number:	5710627115555
Technical:	
Pump speed on which pump data are based:	2850 rpm
Rated flow:	18.3 m³/h
Rated head:	10.2 m
Maximum head:	180 dm
Actual impeller diameter:	100 mm
Code for shaft seal:	BQQE
Curve tolerance:	ISO9906:2012 3B2
Pump version:	A
Materials:	
Pump housing:	Bronze
Pump housing:	CuSn10
Pump housing:	ASTM B505
Impeller:	Stainless steel
Impeller:	EN 1.4301
Impeller:	AISI 304
Material code:	Z
Installation:	
Range of ambient temperature:	-30 .. 60 °C
Maximum operating pressure:	10 bar
Max pressure at stated temp:	10 bar / 120 °C
Type of connection:	DIN
Size of connection:	DN 50
Pressure rating for connection:	PN 6/10
Port-to-port length:	280 mm
Flange size for motor:	FT100
Connect code:	F
Liquid:	
Pumped liquid:	Water
Liquid temperature range:	-25 .. 120 °C
Selected liquid temperature:	20 °C
Density:	998.2 kg/m³
Electrical data:	
Motor type:	80A
IE Efficiency class:	IE3
Rated power - P2:	0.75 kW
Mains frequency:	50 Hz
Rated voltage:	3 x 220-240D/380-415Y V
Rated current:	3.30/1.90 A
Starting current:	580-620 %
Cos phi - power factor:	0.81-0.71
Rated speed:	2840-2870 rpm
Efficiency:	IE3 80,7%
Motor efficiency at full load:	80.7 %
Motor efficiency at 3/4 load:	82.7 %
Motor efficiency at 1/2 load:	81.7 %
Number of poles:	2
Enclosure class (IEC 34-5):	55 Dust/Jetting
Insulation class (IEC 85):	F
Motor protec:	NONE
Motor No:	85U05104
Controls:	
Frequency converter:	NONE
Others:	
Minimum efficiency index, MEI ≥:	0.70
Net weight:	30.9 kg
Gross weight:	34.4 kg
Shipping volume:	0.08 m³

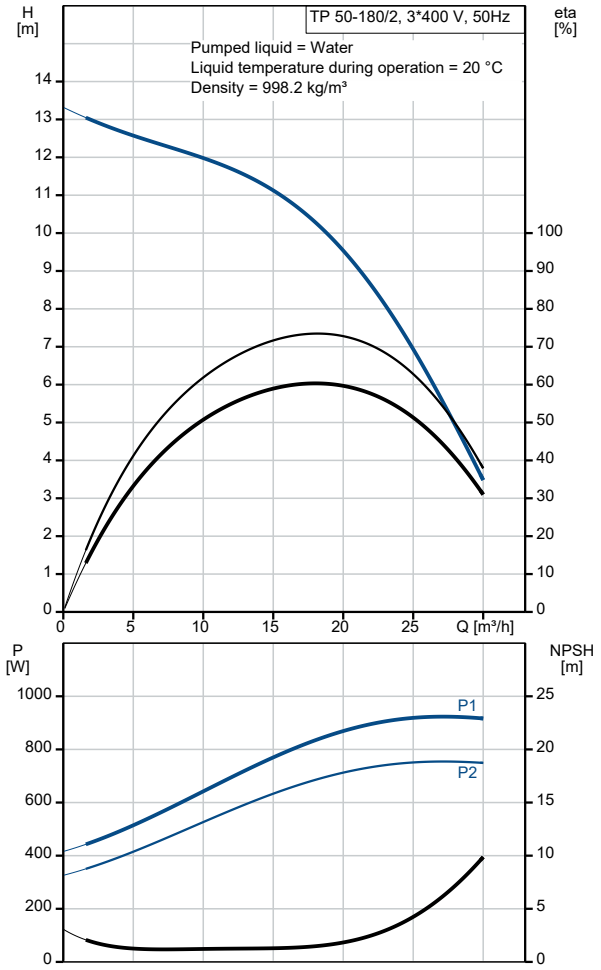

Description	Value
Danish VVS No.:	381883180
Country of origin:	HU
Custom tariff no.:	84137051

97959461 TP 50-180/2 A-F-Z-BQQE-FX1 50 Hz

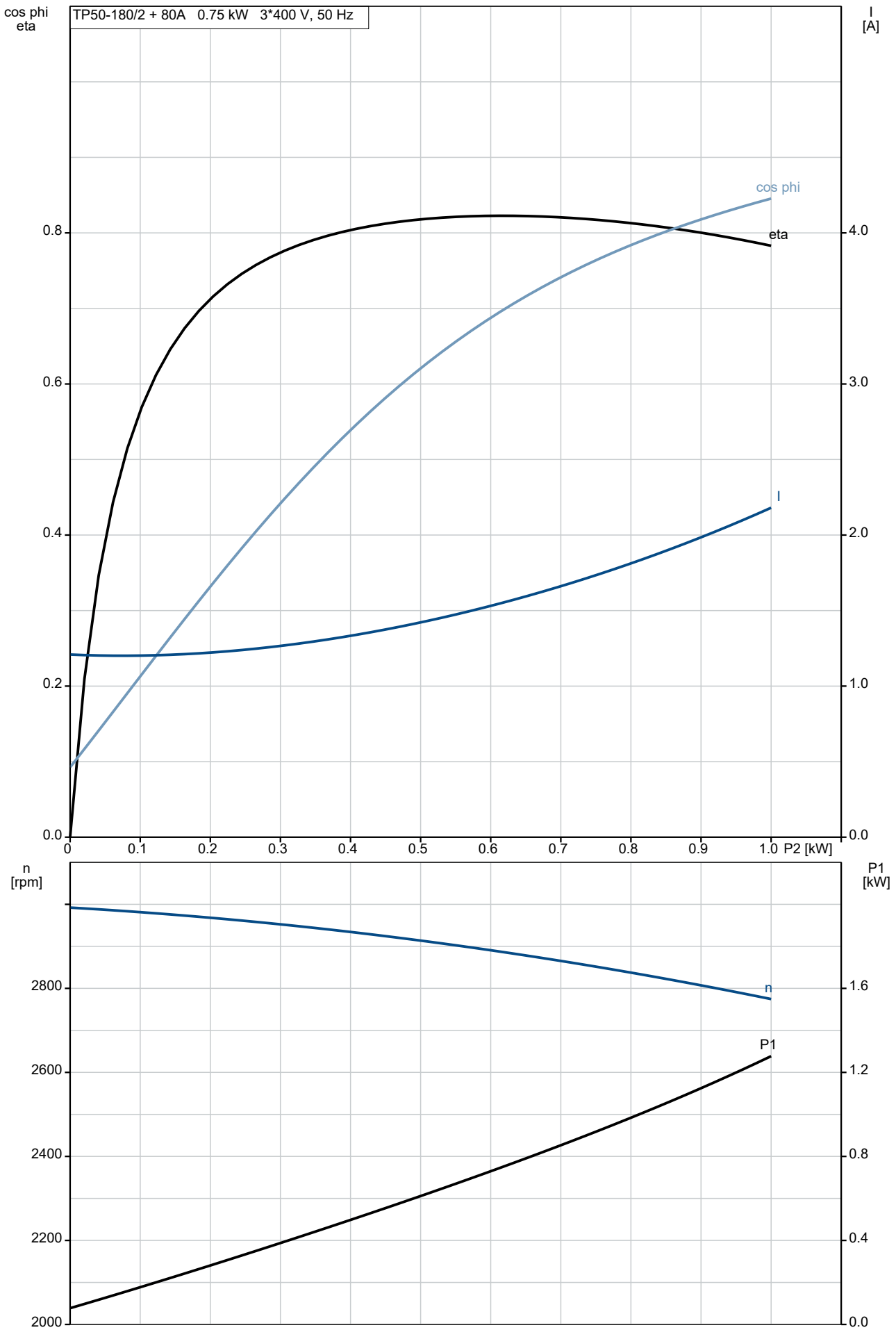

97959461 TP 50-180/2 A-F-Z-BQQE-FX1 50 Hz

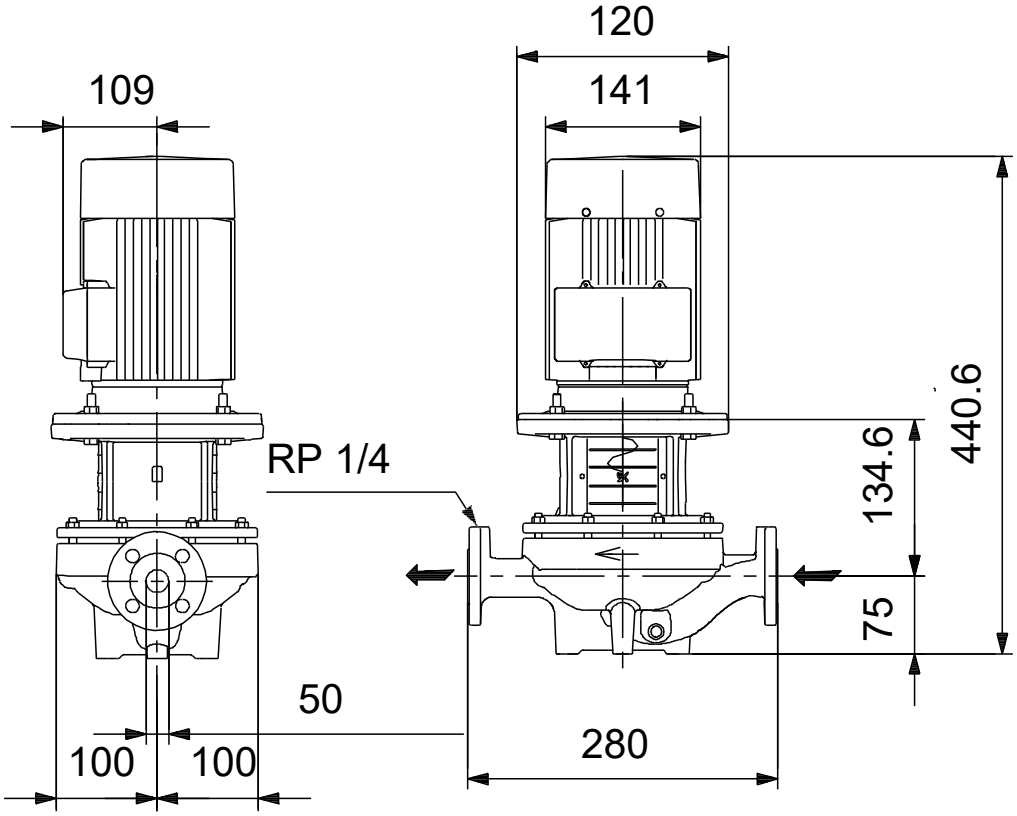

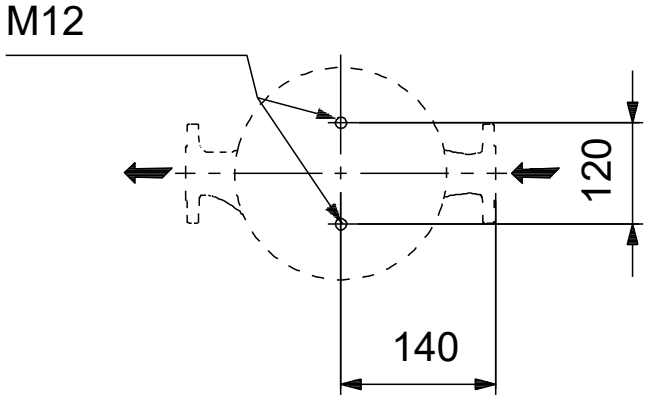

Note! All units are in [mm] unless others are stated.
Disclaimer: This simplified dimensional drawing does not show all details.

Spare parts TP 50-180/2, Product No. 97959461
Produced After 1809 (production year and week number)

Pos	Omschrijving	Opmerking tekst	Classificatie Gegevens	Onderdeelnr.	Aantal	Eenheid
-	Kit, coupling		Dimension: 19/16	00339119	1	pcs
9	Hex socket head cap screw		Designation: DIN 912		4	
			Length (mm): 20			
			Thread: M6			
10a	Coupling half				2	
10	Shaft pin		Diameter: 5		1	
			Length (mm): 26			
-	Kit, shaft seal			98313337	1	pcs
	Plug				2	
72a	O-ring		Diameter: 154		1	
			Material type: EPDM			
			Thickness: 4			
72a	O-ring				1	
105	Shaft seal				1	
-	Shaft w/impeller cpl.			98313231	1	pcs
49b	Split cone nut			96547794	1	
49b	Split cone			96547795	1	
49	Impeller cpl.			96547685	1	
51	Pump shaft			96547792	1	
-	Pump housing cpl.			98313131	1	pcs
65	Teflon ring			98672497	1	
-	Motor			85903982	1	pcs
-	Kit, Ball bearing			96279730	1	
111	Ball bearing		Designation: 6204.2Z.C3.SYN			1
111	Ball bearing					1
157	O-ring		Diameter: 32			1
			Material type: NBR			
			Thickness: 2			
158	Waved washer					1
-	Kit, fan			96279721	1	
156	Fan					1
159a	Seal ring					1
-	Kit, fan cover			96279720	1	
151	Fan cover					1
152	Pan head thread forming screw					2
-	Kit, flange			96279854	1	
156b	Flange					1
159c	Seal ring					1
184	Gasket		Internal diameter: 114,80			1
			Outer diameter: 121,20			
			Thickness: 0,25			
185	Pan head screw					4
186	Drain plug					1
-	Kit, shaft seal			96279722	1	
159c	Seal ring					1
159a	Seal ring					1
-	Kit, terminal box			96279724	1	
152	Pan head thread forming screw					4
164a	Terminal box w/gasket					1
164	Terminal box cover w/gasket					1
173a	Washer		Designation: SQUARE			1
			Internal diameter: 5,5			
			Outer diameter: 10X10			

Pos	Omschrijving	Opmerking tekst	Classificatie Gegevens	Onderdeelnr.	Aantal	Eenheid
			Thickness: 1,5			
173a	Base					1
173	Pan head thread forming screw		Designation: COMBI TORX T25			1
173	Pan head screw		Designation: DIN 7985			1
175	Pan head screw		Designation: DIN 7985			2
176	Terminal cpl.					1
7a	Pan head screw			96536492	4	pcs
7	Coupling guard			96590452	2	pcs
10	Shaft pin		Diameter: 5	96536473	1	pcs
			Length (mm): 26			
10	Shaft pin		Diameter: 5	96587588	1	pcs
			Length (mm): 26			
18	Plug			96620482	1	pcs
18	Plug			98164277	1	pcs
19	Pipe plug		Thread: R 1/4	98163051	2	pcs
72a	O-ring		Diameter: 154	98163015	1	pcs
			Material type: EPDM			
			Thickness: 4			