Inventflow: Grundfos A-partner

Grundfos NB 65-160/157 ASF2ABQQE

Find the pump here:
https://inventflow.nl/en/pompenfilter/nb/grundfos-nb-65-160-157-asf2abqqe

Contact

info@inventflow.nl
+31 (0) 546 45 80 72

Datasheet

Qty.	Description
1	**NB 65-160/157 ASF2ABQQE**

Product No.: 98291563

Non-self priming, single-stage centrifugal
Flange standard: pump according to EN 1092-2.

The pump is for the pumping of thin, clean or slightly contaminated liquids without abrasive or long-fibred solids.

The pump is directly coupled with an
Phase: IEC-flanged 3-phase AC motor.

The impeller is hydraulically as well as dynamically balanced.

The pump has the following characteristics:
- flange dimensions according to EN 1092-2,

Pump housing: - Cast iron volute pump housing,
- stainless steel shaft

Impeller: and Cast iron impeller and bronze wear rings,
- unbalanced mechanical shaft seal according to EN 12756.

Controls:
Frequency converter: NONE
Pressure sensor: N

Liquid:
Pumped liquid: Water
Liquid temperature range: -25 .. 120 °C
Selected liquid temperature: 20 °C
Density: 998.2 kg/m³

Technical:
Pump speed on which pump data are based: 2940 rpm
Rated flow: 103.4 m³/h
Rated head: 27.13 m
Actual impeller diameter: 157 mm
Nominal impeller diameter: 160
Shaft seal arrangement: Single
Code for shaft seal: BQQE
Curve tolerance: ISO9906:2012 3B
Bearing design: Standard

Materials:
Pump housing: Cast iron
EN-GJL-250
ASTM class 35
Wear ring: Brass
Impeller: Cast iron

Qty.	Description	
		EN-GJL-200
		ASTM class 30
	Shaft:	Stainless steel
		EN 1.4301
		AISI 304
	Internal pump house coating:	CED
	Installation:	
	Maximum ambient temperature:	60 °C
	Maximum operating pressure:	16 bar
	Pipe connection standard:	EN 1092-2
	Size of inlet connection:	DN 80
	Size of outlet connection:	DN 65
	Pressure rating for connection:	PN 16
	Bearing lubrication:	Grease
	Pump housing with feet:	No
	Support block:	Y
	Electrical data:	
	Motor type:	160MB
	IE Efficiency class:	IE3
	Rated power - P2:	11 kW
	Mains frequency:	50 Hz
	Rated voltage:	3 x 380-415D/660-690Y V
	Rated current:	20,8-19,8/12,0-11,8 A
	Starting current:	660-780 %
	Cos phi - power factor:	0.88-0.84
	Rated speed:	2940-2950 rpm
	Efficiency:	IE3 91,2%
	Motor efficiency at full load:	91.2 %
	Motor efficiency at 3/4 load:	91.8 %
	Motor efficiency at 1/2 load:	91.3 %
	Number of poles:	2
	Enclosure class (IEC 34-5):	55 Dust/Jetting
	Insulation class (IEC 85):	F
	Motor No:	87420028
	Others:	
	Minimum efficiency index, MEI ≥:	0.70
	Net weight:	144 kg
	Gross weight:	166 kg
	Shipping volume:	0.509 m³
	Country of origin:	HU
	Custom tariff no.:	84137051

98291563 NB 65-160/157 ASF2ABQQE 50 Hz

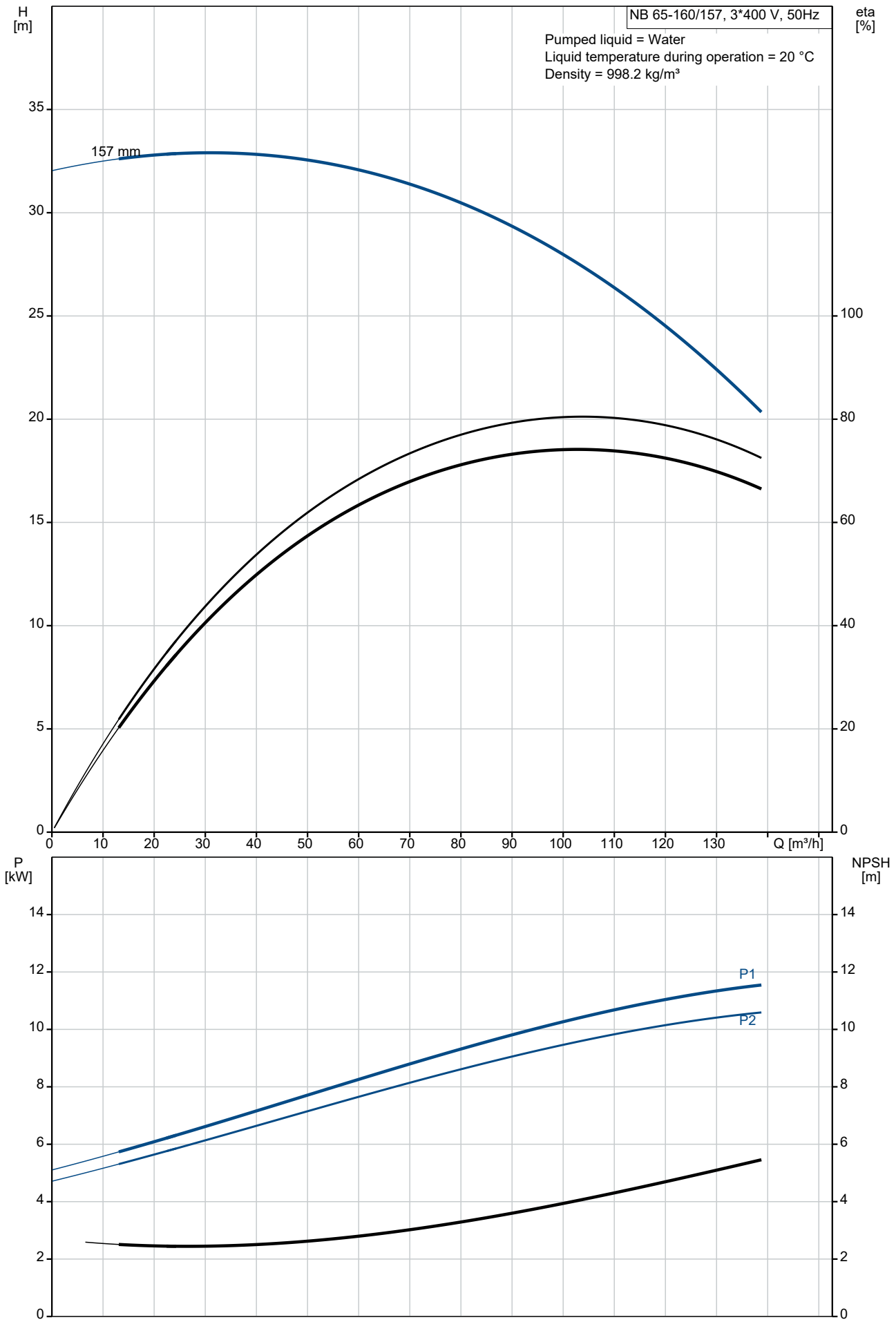

Description	Value
General information:	
Product name:	NB 65-160/157 ASF2ABQQE
Product No:	98291563
EAN number:	5711492591291
Technical:	
Pump speed on which pump data are based:	2940 rpm
Rated flow:	103.4 m³/h
Rated head:	27.13 m
Actual impeller diameter:	157 mm
Nominal impeller diameter:	160
Shaft seal arrangement:	Single
Shaft diameter:	24 mm
Code for shaft seal:	BQQE
Curve tolerance:	ISO9906:2012 3B
Pump version:	AS
Bearing design:	Standard
Materials:	
Pump housing:	Cast iron
Pump housing:	EN-GJL-250
Pump housing:	ASTM class 35
Wear ring:	Brass
Impeller:	Cast iron
Impeller:	EN-GJL-200
Impeller:	ASTM class 30
Shaft:	Stainless steel
Shaft:	EN 1.4301
Shaft:	AISI 304
Internal pump house coating:	CED
Material code:	A
Code for rubber:	E
Installation:	
Maximum ambient temperature:	60 °C
Maximum operating pressure:	16 bar
Pipe connection standard:	EN 1092-2
Size of inlet connection:	DN 80
Size of outlet connection:	DN 65
Pressure rating for connection:	PN 16
Bearing lubrication:	Grease
Pump housing with feet:	No
Support block:	Y
Connect code:	F2
Liquid:	
Pumped liquid:	Water
Liquid temperature range:	-25 .. 120 °C
Selected liquid temperature:	20 °C
Density:	998.2 kg/m³
Electrical data:	
Motor type:	160MB
IE Efficiency class:	IE3
Rated power - P2:	11 kW
Mains frequency:	50 Hz
Rated voltage:	3 x 380-415D/660-690Y V
Rated current:	20,8-19,8/12,0-11,8 A
Starting current:	660-780 %
Cos phi - power factor:	0.88-0.84
Rated speed:	2940-2950 rpm
Efficiency:	IE3 91,2%
Motor efficiency at full load:	91.2 %
Motor efficiency at 3/4 load:	91.8 %
Motor efficiency at 1/2 load:	91.3 %
Number of poles:	2
Enclosure class (IEC 34-5):	55 Dust/Jetting

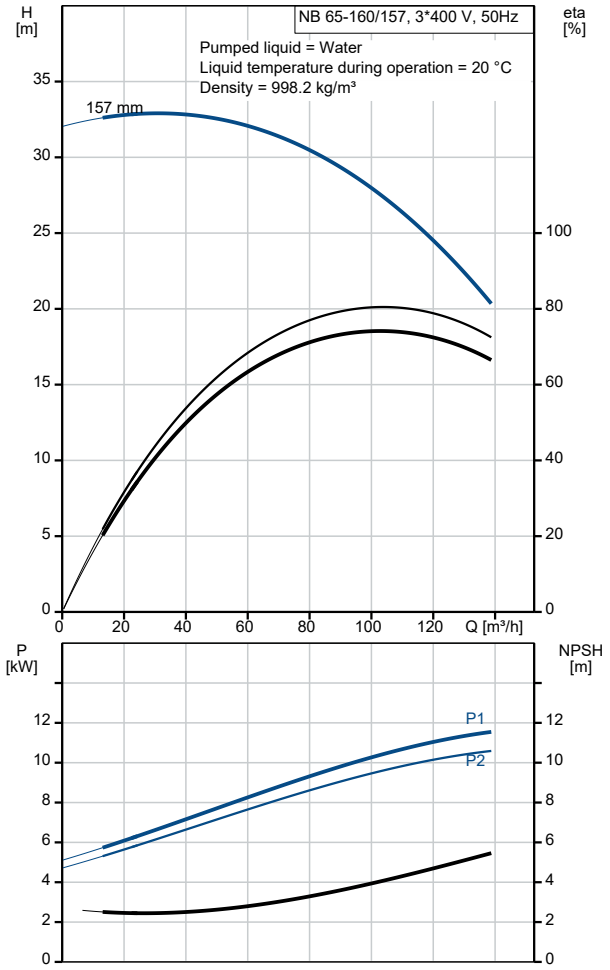

Description	Value
Insulation class (IEC 85):	F
Motor protec:	PTC
Motor No:	87420028
Mount. design. acc. IEC 34-7:	IM B35
Controls:	
Frequency converter:	NONE
Pressure sensor:	N
Others:	
Minimum efficiency index, MEI ≥:	0.70
Net weight:	144 kg
Gross weight:	166 kg
Shipping volume:	0.509 m^3
Country of origin:	HU
Custom tariff no.:	84137051

98291563 NB 65-160/157 ASF2ABQQE 50 Hz

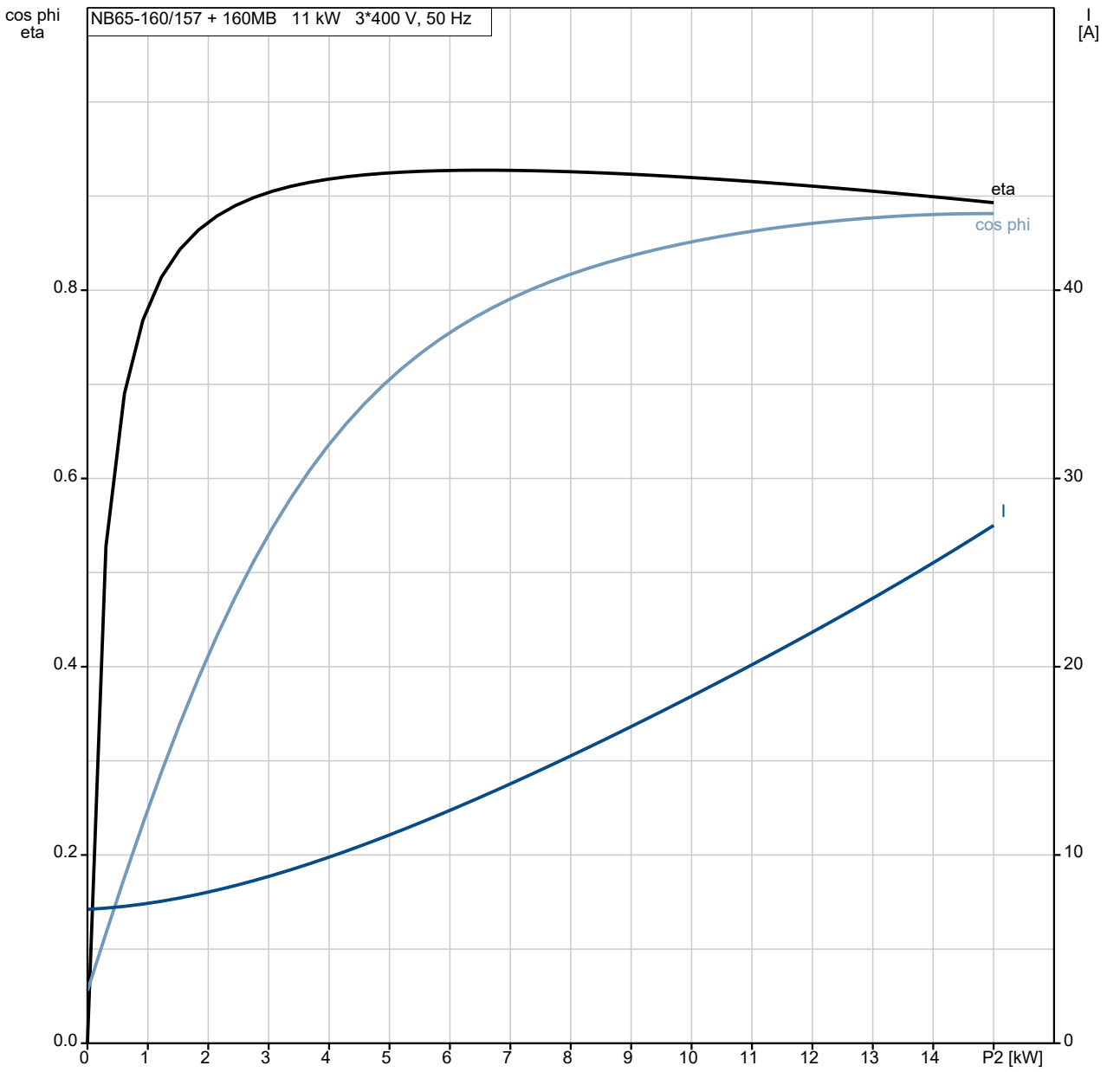

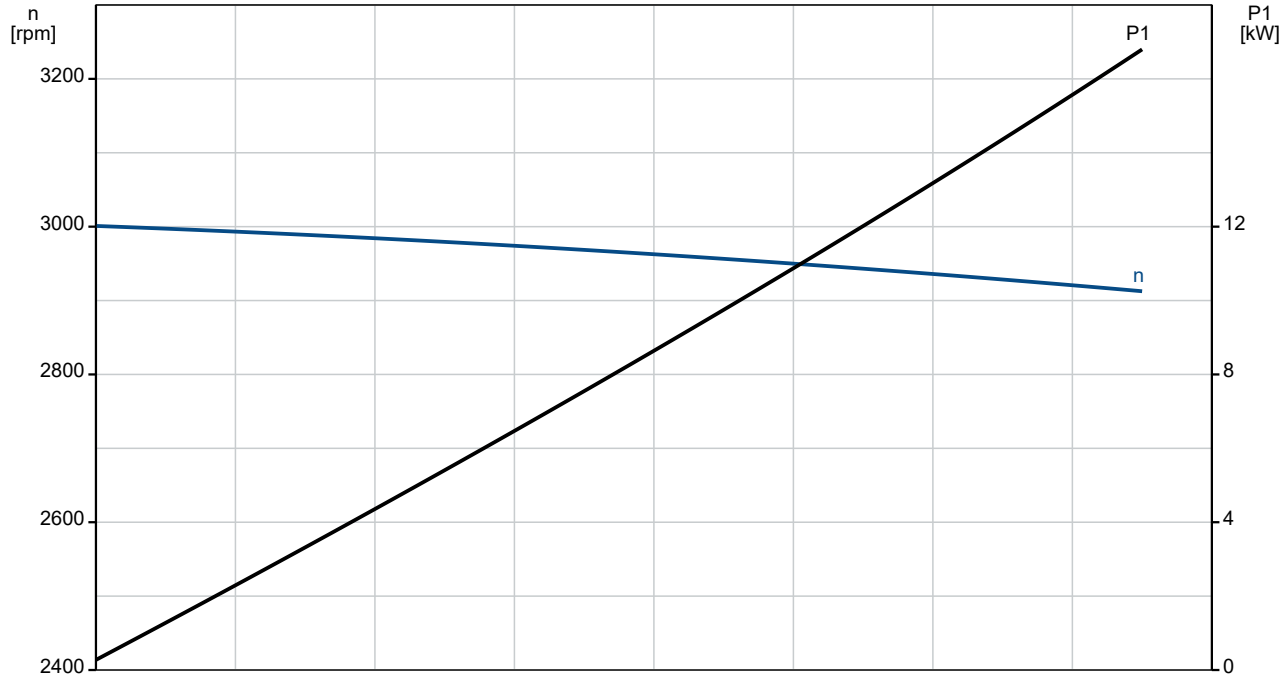

98291563 NB 65-160/157 ASF2ABQQE 50 Hz

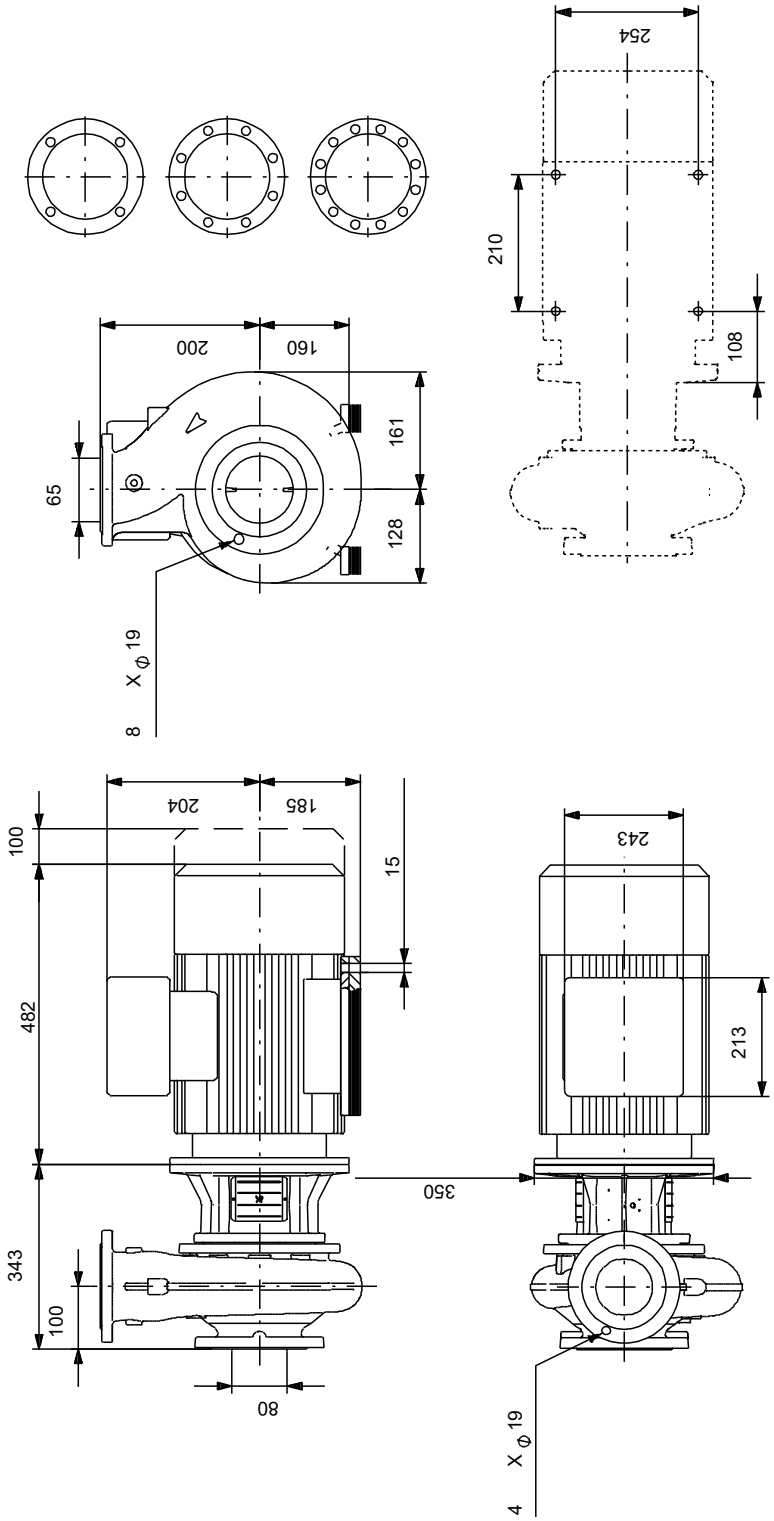

Note! All units are in [mm] unless others are stated.
Disclaimer: This simplified dimensional drawing does not show all details.

Spare parts NB 65-160/157, Product No. 98291563
Produced After 2101 (production year and week number)

Pos	Omschrijving	Opmerking tekst	Classificatie Gegevens	Onderdeelnr.	Aantal	Eenheid
-	Bulk, Nut			92514630	1	pcs
67	Nut		Thread: M14		5	
-	Bulk, o-ring			92547662	1	pcs
72a	O-ring				5	
-	Bulk, Plug vent			96620482	1	pcs
18	Plug				5	
-	Bulk, Shaft seal			99380916	1	pcs
105	Shaft seal				5	
-	Kit, coupling guard			96809946	1	pcs
7a	Pan head screw				4	
7	Coupling guard				2	
-	Kit, motor stool			98990921	1	pcs
1a	Motor stool				1	
7	Coupling guard				2	
18	Plug				1	
28	Hex head screw				4	
36	Hex nut		Thread: M16		4	
36	Nut		Thread: M10		6	
76a	Rivet				2	
77a	Pan head screw				4	
-	Kit, nut			96939128	1	pcs
11	Parallel key		Dimension: 6X6X35		1	
- 36	Nut				1	
66a	Spring lock washer					1
66	Washer					1
67	Nut		Thread: M14			1
-	Kit, pump housing			95131723	1	pcs
- 6	Pump housing				1	
26	Staybolt		Length (mm): 40			6
			Thread: M10			
45b	Wear ring					1
20	Pipe plug		Thread: R 3/8		2	
36	Nut		Thread: M10		6	
-	Kit, stub shaft			96039354	1	pcs
9	Socket set screw		Length (mm): 10		2	
			Thread: M8			
11	Parallel key		Dimension: 6X6X35		1	
51	Pump shaft				1	
66a	Spring lock washer				1	
66	Washer				1	
67	Nut		Thread: M14		1	
-	Spare, O-ring			97757659	1	pcs
72a	O-ring				1	
-	Spare, plug vent			98164277	1	pcs
18	Plug				1	
-	Spare, shaft seal			98434904	1	pcs
105	Shaft seal				1	
-	Spare, wear ring			99208818	1	pcs
45	Wear ring				1	
-	Motor				1	pcs
-	Kit, bearing cpl.			96796674	1	
32b	Waved washer					1
111	Ball bearing					1
154	Ball bearing					1
157	O-ring					1
-	Kit, bearing plate			96796664	1	
155.a	Bearing cover					1
208a	Gasket					3

Pos	Omschrijving	Opmerking tekst	Classificatie Gegevens	Onderdeelnr.	Aantal	Eenheid
208	Hex socket head cap screw		Designation: DIN912			3
			Length (mm): 40			
			Thread: M5			
-	Kit, eyebolt			96796712	1	
189	Eyebolt					2
-	Kit, fan			96796648	1	
156.c	Retaining ring					1
156	Fan					1
-	Kit, fan cover			96796647	1	
151	Fan cover					1
152.a	Rubber bush					4
152	Hex head cap screw					4
196	Diaphragm					1
-	Kit, flange			96796662	1	
156.b	Flange					1
159.b	Seal ring					1
185.b	Nut					4
185	Hex socket head cap screw					4
186	Drain plug					4
195.a	Grease nipple					1
-	Kit, foot			96796666	1	
191	Foot					2
192	Hex socket head cap screw					4
194	Lock washer					4
194	Nut					4
-	Kit, gaskets			96798508	1	
184	O-ring		Diameter: 235			2
-	Kit, key			96279873	1	
40	Parallel key		Designation: DS96 DIN 6885			1
			Dimension: 12X8X90			
-	Kit, lubrication nipple			96796671	1	
195.b	Grease nipple					2
195.a	Grease nipple					1
-	Kit, ND-end shield cpl.			96796669	1	
32b	Waved washer					1
156.a	End shield NDE					1
157	O-ring					1
159	V-ring					1
185.c	Nut					4
185.a	Hex socket head cap screw					4
195.b	Grease nipple					1
-	Kit, shaft seal			96843459	1	
159.b	V-ring					1
159	V-ring					1
-	Kit, terminal board			96796657	1	
	Terminal connection					3
	Washer					12
36	Hex nut					12
173	Torx Screw					1
176.d	Terminal board					1
176	Terminal board					1
177	Torx Screw					1

Pos	Omschrijving	Opmerking tekst	Classificatie Gegevens	Onderdeelnr.	Aantal	Eenheid
-	Kit, terminal box cover			96796659	1	
164	Terminal box cover					1
273a	Pan head thread forming screw					4
49	Impeller			98296630	1	pcs