Inventflow: Grundfos A-partner

Grundfos CRE 1-4 N-FGJ-A-E-HQQE

Find the pump here:
https://inventflow.nl/en/pompenfilter/cre/grundfos-cre-1-4-n-fgj-a-e-hqqe

Contact

info@inventflow.nl
+31 (0) 546 45 80 72

Datasheet

Qty.	Description
1	**CRE 1-4 N-FGJ-A-E-HQQE**

Note! Product picture may differ from actual product

Product No.: 98389315
Vertical, non-self-priming, multistage, in-line, centrifugal pump for installation in pipe systems and mounting on a foundation.

The pump has the following characteristics:
- Impellers and intermediate chambers are made of

Impeller: Stainless steel DIN W.-Nr. EN 1.4301.
Pump housing: - Pump head and base are made of Cast iron.
- The shaft seal has assembly length according to EN 12756.
- Power transmission is via cast iron split coupling.

Flange standard: - Pipework connection is via DIN / ANSI / JIS flanges.

The pump is fitted with an IEC-flanged single-phase MGE motor with frequency converter and PI-controller integrated in the motor terminal box. No additional motor protection is required as both motor and electronics are protected by integrated overload and temperature protection.

The pump is equipped with a pressure transmitter registering pump discharge pressure and enabling controlled pump operation based on constant pressure.

A control panel enables setting of required setpoint as well as setting of pump to MIN or MAX operation or to STOP. The control panel has indicator lights for "Operation" and "Fault".

Communication with the pump is possible by means of Grundfos R100 Remote Control enabling further settings as well as reading out of a number of parameters such as "Actual value", "Speed", "Power input" and total "Power consumption".

The terminal box holds terminals for the connection of:
- Pump start/stop (potential-free contact),
- external remote setpoint setting via analog signal, 0 - 10 V, 0(4) - 20 mA,
- 10 V voltage supply for setpoint potentiometer, Imax = 5 mA,
- pressure sensor factory-fitted.
- input for forced control to MIN, MAX, External fault or Flowswitch (potential-free contact),
- potential-free fault signal relay with changeover contact,

Qty.	Description

- RS485 GENIbus.

Controls:

Frequency converter:	Built-in
Pressure sensor:	Y

Liquid:

Pumped liquid:	Water
Liquid temperature range:	-20 .. 120 °C
Selected liquid temperature:	20 °C
Density:	998.2 kg/m³

Technical:

Pump speed on which pump data are based:	3410 rpm
Rated flow:	2.2 m³/h
Rated head:	26.8 m
Pump orientation:	Vertical
Shaft seal arrangement:	Single
Code for shaft seal:	HQQE
Approvals on nameplate:	CE,EAC,UKCA,WRAS,ACS
Curve tolerance:	ISO9906:2012 3B

Materials:

Base:	Cast iron
	EN 1561 EN-GJL-200
	ASTM A48-25B
Impeller:	Stainless steel
	EN 1.4301
	AISI 304
Bearing:	SIC

Installation:

Maximum ambient temperature:	50 °C
Maximum operating pressure:	25 bar
Max pressure at stated temp:	25 bar / 120 °C
	25 bar / -20 °C
Type of connection:	DIN / ANSI / JIS
Size of inlet connection:	DN 25/32
Size of outlet connection:	DN 25/32
Pressure rating for connection:	PN 25
Flange rating inlet:	250 lb
Flange size for motor:	FT85

Electrical data:

Motor standard:	IEC
Motor type:	71A
IE Efficiency class:	IE5
Rated power - P2:	0.37 kW
Power (P2) required by pump:	0.37 kW
Mains frequency:	50 / 60 Hz
Rated voltage:	1 x 200-240 V
Rated current:	2.40-2.10 A
Cos phi - power factor:	0.96
Rated speed:	360-4000 rpm
Efficiency:	84.0%
Motor efficiency at full load:	84.0 %
Enclosure class (IEC 34-5):	IP55
Insulation class (IEC 85):	F
Motor No:	98190190

Others:

Minimum efficiency index, MEI ≥:	0.70
Net weight:	26.2 kg
Gross weight:	29.1 kg
Shipping volume:	0.143 m³

Qty.	Description	
	Danish VVS No.:	385940004
	Country of origin:	DK
	Custom tariff no.:	84137075

98389315 CRE 1-4 N-FGJ-A-E-HQQE

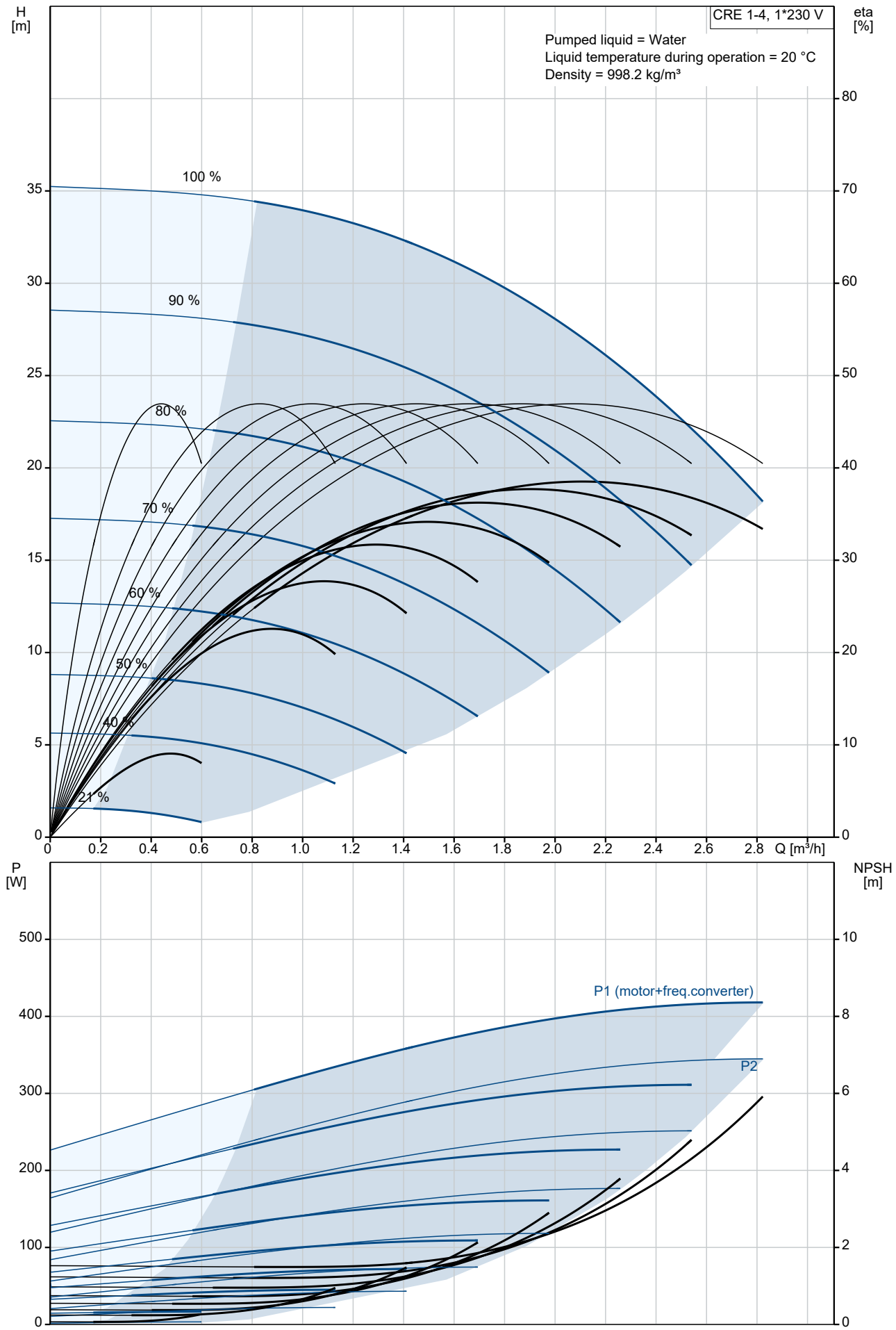

Description	Value
General information:	
Product name:	CRE 1-4 N-FGJ-A-E-HQQE
Product No:	98389315
EAN number:	5711494175598
Technical:	
Pump speed on which pump data are based:	3410 rpm
Rated flow:	2.2 m³/h
Rated head:	26.8 m
Maximum head:	36.2 m
Stages:	4
Impellers:	4
Number of reduced-diameter impellers:	0
Low NPSH:	N
Pump orientation:	Vertical
Shaft seal arrangement:	Single
Code for shaft seal:	HQQE
Approvals on nameplate:	CE,EAC,UKCA,WRAS,ACS
Curve tolerance:	ISO9906:2012 3B
Pump version:	N
Model:	A
Materials:	
Base:	Cast iron
Base:	EN 1561 EN-GJL-200
Base:	ASTM A48-25B
Impeller:	Stainless steel
Impeller:	EN 1.4301
Impeller:	AISI 304
Material code:	A
Code for rubber:	E
Bearing:	SIC
Installation:	
Maximum ambient temperature:	50 °C
Maximum operating pressure:	25 bar
Max pressure at stated temp:	25 bar / 120 °C
Max pressure at stated temp:	25 bar / -20 °C
Type of connection:	DIN / ANSI / JIS
Size of inlet connection:	DN 25/32
Size of outlet connection:	DN 25/32
Pressure rating for connection:	PN 25
Flange rating inlet:	250 lb
Flange size for motor:	FT85
Connect code:	FGJ
Liquid:	
Pumped liquid:	Water
Liquid temperature range:	-20 .. 120 °C
Selected liquid temperature:	20 °C
Density:	998.2 kg/m³
Electrical data:	
Motor standard:	IEC
Motor type:	71A
IE Efficiency class:	IE5
Rated power - P2:	0.37 kW
Power (P2) required by pump:	0.37 kW
Mains frequency:	50 / 60 Hz
Rated voltage:	1 x 200-240 V
Rated current:	2.40-2.10 A
Cos phi - power factor:	0.96
Rated speed:	360-4000 rpm
Efficiency:	84.0%
Motor efficiency at full load:	84.0 %
Enclosure class (IEC 34-5):	IP55
Insulation class (IEC 85):	F

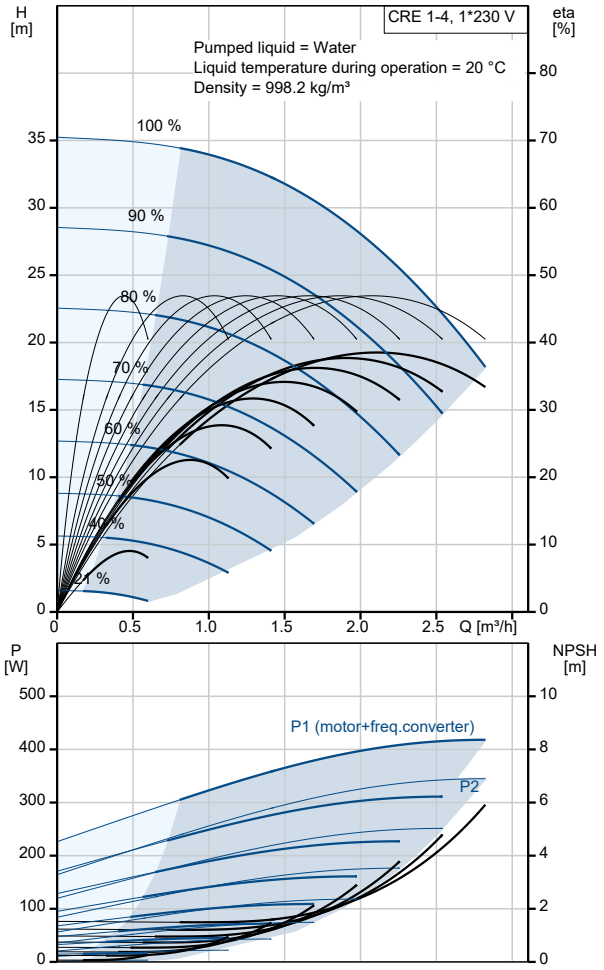

Description	Value
Motor protec:	ELEC
Motor No:	98190190
Controls:	
Control panel:	Standard
Function Module:	FM300 - Advanced
Frequency converter:	Built-in
Pressure sensor:	Y
Others:	
Minimum efficiency index, MEI ≥:	0.70
Net weight:	26.2 kg
Gross weight:	29.1 kg
Shipping volume:	0.143 m^3
Config. file no:	98498366
Danish VVS No.:	385940004
Country of origin:	DK
Custom tariff no.:	84137075

98389315 CRE 1-4 N-FGJ-A-E-HQQE

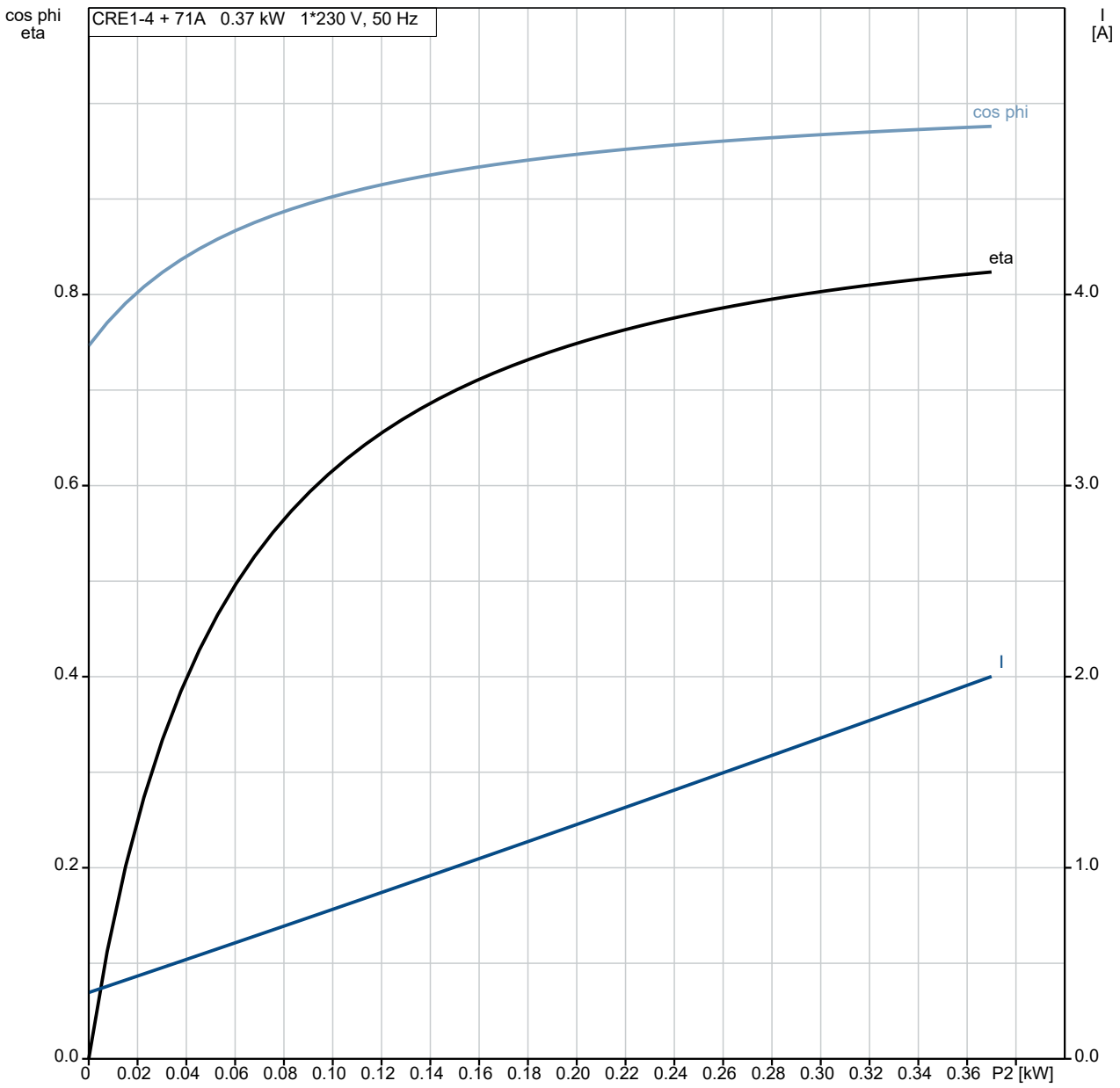

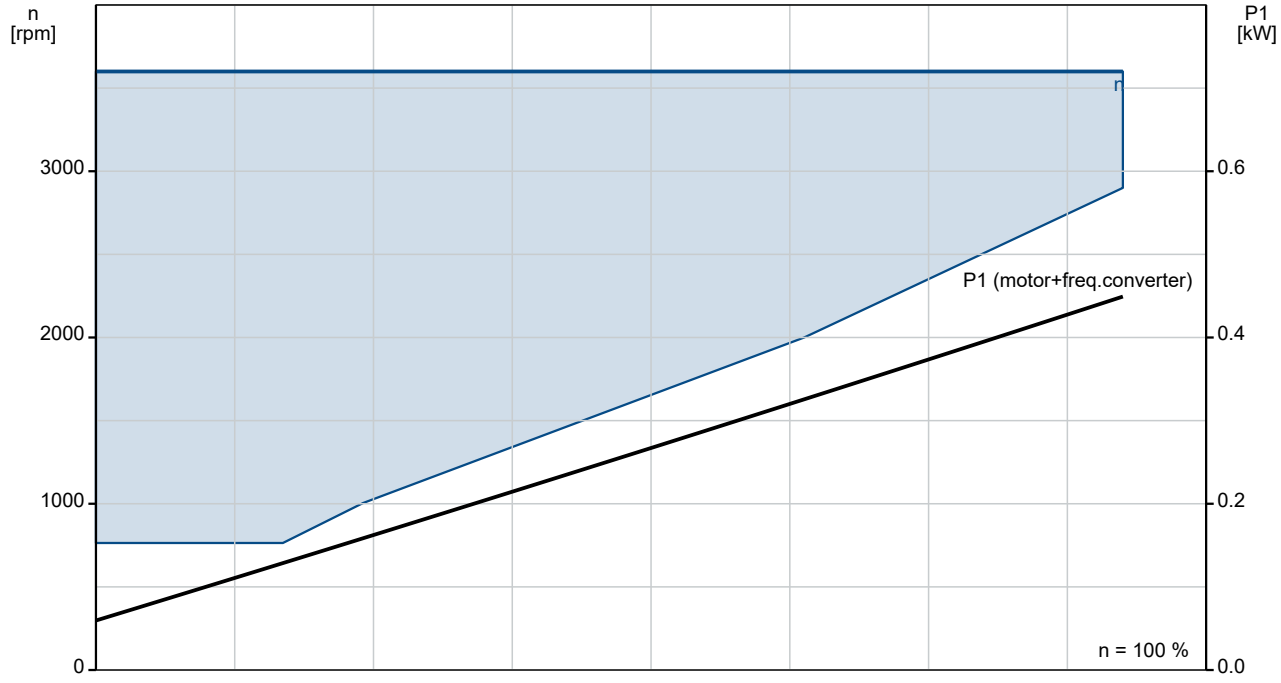

98389315 CRE 1-4 N-FGJ-A-E-HQQE

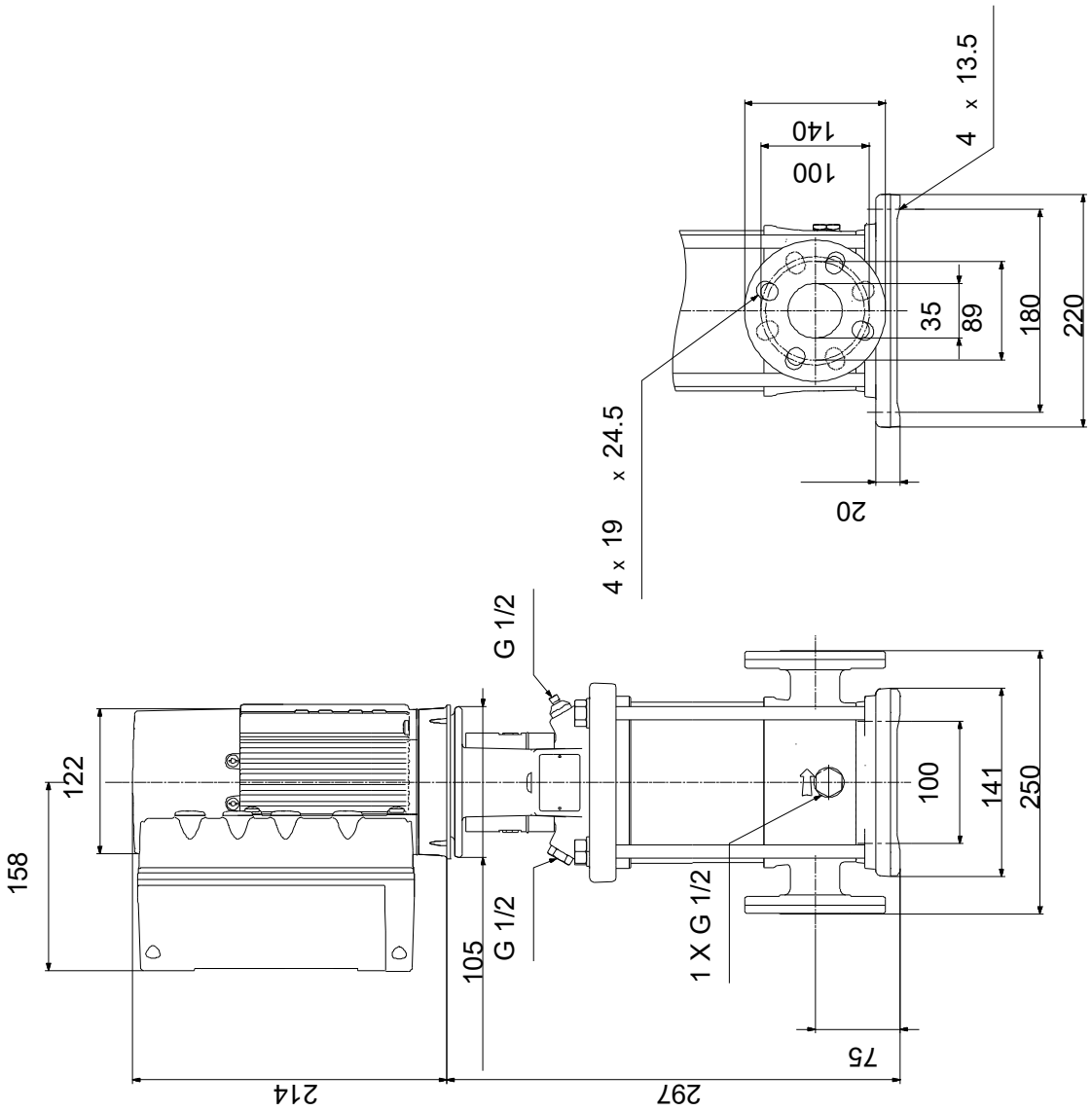

Note! All units are in [mm] unless others are stated.
Disclaimer: This simplified dimensional drawing does not show all details.

Spare parts CRE 1-4, Product No. 98389315
Produced After 1252 (production year and week number)

Pos	Omschrijving	Opmerking tekst	Classificatie Gegevens	Onderdeelnr.	Aanta	Eenheid
-	Kit, chamber stack		Bearing type: SILICON CARBIDE	96453487	1	pcs
- 4a	Chamber w. bearing cpl.				1	
	Vane					1
	Intermediate chamber					1
	Retainer for bearing					1
	Guide vane					6
45	Neck ring					1
47	Bearing bush					1
65	Retainer					1
65	Retainer					1
- 4	Chamber cpl.				2	
	Vane					1
	Intermediate chamber					1
	Plate					1
	Guide vane					6
45	Neck ring					1
65	Retainer					1
65	Retainer					1
- 5a	Chamber cpl.				1	
	Vane					1
	Intermediate chamber					1
45	Neck ring					1
65	Retainer					1
65	Retainer					1
- 44a	Guide vane cpl.				1	
	Plate					1
	Guide vane					6
50	Top plate					1
47a	Bearing ring				1	
49	Impeller cpl.				4	
51	Shaft, spline, cpl.				1	
64d	Spacing pipe		Internal diameter: 12,85		1	
			Outer diameter: 15,85			
			Length (mm): 4,50			
64c	Clamp, splined		Internal diameter: 8,5		1	
			Outer diameter: 15			
64a	Spacing pipe				2	
66	Wedge lock washer				1	
67	Lock nut		Thread: M8		1	
-	Kit, coupling			00415060	1	pcs
9	Hex socket head cap screw		Designation: DIN 912		4	
			Length (mm): 20			
			Thread: M6			
10a	Coupling half				2	
10	Shaft pin		Diameter: 5		1	
			Length (mm): 26			
-	Kit, coupling guard			96505130	1	pcs
7.a	Combi Slot Torx screw				4	
7	Coupling guard				2	
-	Kit, gaskets			96455090	1	pcs
37	O-ring				2	
38	O-ring				1	
38	O-ring				2	
109	O-ring		Diameter: 22,00		1	
			Material type: EPDM			
			Thickness: 2,75			
-	Kit, plug			96505133	1	pcs
- 18	Air vent screw				1	

Pos	Omschrijving	Opmerking tekst	Classificatie Gegevens	Onderdeelnr.	Aanta	Eenheid
	Spindle					1
	Plug					1
23b	Spindle				1	
25	Plug				1	
25	Plug				1	
38	O-ring				1	
38	O-ring				2	
38	O-ring		Diameter: 16,3		1	
			Material type: FKM			
			Thickness: 2,4			
38	O-ring		Diameter: 16,3		2	
			Material type: FKM			
			Thickness: 2,4			
-	Kit, shaft seal HQQE			96455086	1	pcs
105	Shaft seal		Material type: HQQE		1	
-	Kit, wear parts		Material type: SILICON CARBIDE	96455095	1	pcs
- 4a	Chamber w. bearing cpl.				1	
	Vane					1
	Retainer					1
	Guide vane					6
4a	Intermediate chamber					1
45	Neck ring					1
47	Bearing bush					1
65	Retainer for seal ring					1
65	Neck ring retainer					1
45	Neck ring				8	
47a	Bearing ring				1	
64d	Spacing pipe		Internal diameter: 12,85		1	
			Outer diameter: 15,85			
			Length (mm): 4,50			
64c	Clamp, splined		Internal diameter: 8,5		1	
			Outer diameter: 15			
65	Neck ring retainer				8	
66	Wedge lock washer				1	
67	Lock nut		Thread: M8		1	
441 b	Gasket				2	
-	Motor				1	pcs
-	Kit, adapter			98345796	1	
- 252 a	Adapter set					1
	Adapter					
	Adapter					
167	Cable gland					
-	Kit, bearing cpl.			98330603	1	
111	Ball bearing		Designation: 6204.2Z.C3.SYN			1
153	Ball bearing		Designation: 6204.2Z.C3.SYN			1
156 d	Gasket		Internal diameter: 114,80			1
			Outer diameter: 121,20			
			Thickness: 0,25			
156c	Seal ring					2
158 a	O-ring		Diameter: 47			1
			Material type: NBR			
			Thickness: 3			
158	Waved washer					1
-	Kit, Blanking plug			98334761	1	
252 b	Plug cpl.					4
-	Kit, cable gland			98337336	1	
- 293	Cable glands set			98271484		1
167	Cable gland					

Pos	Omschrijving	Opmerking tekst	Classificatie Gegevens	Onderdeelnr.	Aanta	Eenheid
167	Cable gland					
-	Kit, connector plugs			98403113	1	
266	Connector plug 10-pole					1
266	Connector plug 2-pole					1
266	Connector plug 8-pole					1
266	Connector plug 8-pole					1
266	Connector plug 8-pole					1
266	Connector plug 3-pole					1
266	Connector plug 3-pole					1
266	Connector plug 3-pole					1
-	Kit, control box			98406653	1	
152	Pan head thread forming screw					1
178	Pan head thread forming screw					4
251 d	Pan head thread forming screw					4
251 b	Control box					1
251 a	Control box					1
252 b	Plug cpl.					4
266	Connector plug 10-pole					1
266	Connector plug 2-pole					1
268 a	Base					1
268	Pan head screw					1
273 b	Battery					1
273	Funct. Module cpl.					1
275 a	Pin					1
277 a	Cross recess Pan head screw					5
277 a	Cross recess Pan head screw					1
277 a	Cross recess Pan head screw					1
277	Isolation cover					1
286	Spacer					1
287	Cover					1
288 b	Retaining ring					6
288 a	Pan head thread forming screw					6
288	Wire clamp					3
289	Wire clamp					1
290	Control panel, cpl.					1
-	Kit, Control box upper			98334764	1	
251 d	Pan head thread forming screw					4
251 b	Control box					1
	Kit, Control panel			98939973	1	
-	Kit, cover			98330622	1	
287	Cover					1
-	Kit, fan			98290123	1	
152	Pan head thread forming screw					4
156c	Seal ring					1
156	Fan					1
-	Kit, flange (DE)			98290125	1	
156 d	Gasket		Internal diameter: 114,80			1
			Outer diameter: 121,20			
			Thickness: 0,25			
156 b	Flange					1

Pos	Omschrijving	Opmerking tekst	Classificatie Gegevens	Onderdeelnr.	Aanta	Eenheid
185	Cross recess Pan head screw				4	
186	Drain plug				1	
-	Kit, Funct. module			98334777	1	
273 a	Cross recess Pan head screw				5	
273	Funct. Module cpl.				1	
275 a	Pin				1	
286	Spacer				1	
-	Kit, Isolation cover			98330624	1	
277 a	Cross recess Pan head screw				1	
277	Isolation cover				1	
-	Kit, Lower part cpl.			98330614	1	
178	Pan head thread forming screw				4	
251 a	Control box				1	
275 a	Pin				1	
277 a	Cross recess Pan head screw				1	
277	Isolation cover				1	
-	Kit, motor			98293684	1	
	Terminal				3	
111	Ball bearing		Designation: 6204.2Z.C3.SYN		1	
150	Stator				1	
150	Stator housing				1	
151	Fan cover				1	
152	Pan head thread forming screw				4	
153	Ball bearing		Designation: 6204.2Z.C3.SYN		1	
156 d	Gasket		Internal diameter: 114,80		1	
			Outer diameter: 121,20			
			Thickness: 0,25			
156c	Seal ring				1	
156c	Seal ring				1	
156 b	Flange				1	
156	Fan				1	
157	O-ring		Diameter: 47		1	
			Material type: NBR			
			Thickness: 3			
158	Waved washer				1	
172	Shaft w/rotor				1	
178	Pan head thread forming screw				4	
185	Cross recess Pan head screw				4	
186	Drain plug				1	
203	Terminal plug				1	
289 a	Pan head thread forming screw				1	
-	Kit, plug			99369622	1	
	Terminal				3	
203	Terminal plug				1	
205	Pan head thread forming screw				1	
-	Kit, screws			98330627	1	
268 a	Base				1	
268	Pan head screw				1	
288 b	Retaining ring				6	
288 a	Pan head thread forming screw				6	
288	Wire clamp				3	
289 a	Pan head thread forming screw				1	

Pos	Omschrijving	Opmerking tekst	Classificatie Gegevens	Onderdeelnr.	Aanta	Eenheid
289	Wire clamp					1
	Pan head thread forming screw			99598708	4	
111	Ball bearing		Designation: 6204.2Z.C3.SYN	97914979	1	
152	Pan head thread forming screw			99834207	1	
152	Pan head thread forming screw			99814578	1	
156 d	Gasket		Internal diameter: 114,80	99406425	1	
			Outer diameter: 121,20			
			Thickness: 0,25			
186	Drain plug			99980519	1	
251 d	Pan head thread forming screw			98995460	4	
2a	Pump head			96588151	1	pcs
4a	Chamber w. bearing cpl.			98371208	1	pcs
4a	Chamber w. bearing cpl.			97690601	1	pcs
4a	Chamber w. bearing cpl.			97690590	1	pcs
4a	Chamber w. bearing cpl.			96547660	1	pcs
4a	Chamber w. bearing cpl.			98371207	1	pcs
- 4	Chamber cpl.			97690020	2	pcs
45	Neck ring			96536194	1	
65	Retainer			92501765	1	
65	Retainer			98270018	1	
65	Retainer			92501764	1	
4	Chamber cpl.			96547662	2	pcs
4	Chamber cpl.			98371206	2	pcs
5a	Chamber cpl.			98371205	1	pcs
5a	Chamber cpl.			96588148	1	pcs
6	Base			96588146	1	pcs
7a	Combi Slot Torx screw			96886324	4	pcs
10	Shaft pin		Diameter: 5	96536473	1	pcs
			Length (mm): 26			
10	Shaft pin		Diameter: 5	96587588	1	pcs
			Length (mm): 26			
18	Air vent screw			96547461	1	pcs
18	Air vent screw			95061351	1	pcs
- 25a	Priming valve cpl.			96588242	1	pcs
38	O-ring			99198815	1	
38	O-ring			99412727	1	
26	Staybolt		Length (mm): 97	96536314	4	pcs
			Thread: M12			
26	Staybolt		Length (mm): 97	98986269	4	pcs
			Thread: M12			
32	Washer		Designation: DIN 125 A	99883474	4	pcs
			Internal diameter: 13			
			Outer diameter: 24			
			Thickness: 2,5			
36	Nut		Thread: M12	96620479	4	pcs
37	O-ring			96547656	2	pcs
38	O-ring			99198815	2	pcs
38	O-ring			99412727	2	pcs
44a	Guide vane cpl.			96547669	1	pcs
44a	Guide vane cpl.			98371221	1	pcs
47a	Bearing ring			97905743	1	pcs
47a	Bearing ring			96547649	1	pcs
49	Impeller cpl.			96547665	4	pcs
49	Impeller cpl.			98394397	4	pcs
51	Shaft, spline, cpl.			96588199	1	pcs
55	Outer sleeve			98811265	1	pcs
60	Formed wire spring			99935918	1	pcs
64c	Clamp, splined		Internal diameter: 8,5	98496968	1	pcs
			Outer diameter: 15			
64a	Spacing pipe			96536198	2	pcs
66	Wedge lock washer			96536157	1	pcs
66	Wedge lock washer			92575609	1	pcs

Pos	Omschrijving	Opmerking tekst	Classificatie Gegevens	Onderdeelnr.	Aanta	Eenheid
67	Lock nut		Thread: M8	98277008	1	pcs
105	Shaft seal		Material type: HQQE	96983415	1	pcs