Inventflow: Grundfos A-partner

Grundfos CRE 10-3 A-FJ-A-E-HQQE

Find the pump here:
https://inventflow.nl/en/pompenfilter/cre/grundfos-cre-10-3-a-fj-a-e-hqqe

Contact

info@inventflow.nl
+31 (0) 546 45 80 72

Datasheet

Qty.	Description
1	**CRE 10-3 A-FJ-A-E-HQQE**

Note! Product picture may differ from actual product

Product No.: 98390267

Vertical, multistage centrifugal pump with inlet and outlet ports on same the level (inline). The pump head and base are in cast iron – all other wetted parts are in stainless steel. A cartridge shaft seal ensures high reliability, safe handling, and easy access and service. Power transmission is via a rigid split coupling. Pipe connection is via combined DIN-JIS flanges.

The pump is fitted with a 3-phase, fan-cooled, permanent-magnet, synchronous motor.
The motor efficiency is classified as IE5 in accordance with IEC 60034-30-2.
The motor includes a frequency converter and PI controller in the motor terminal box. This enables continuously variable control of the motor speed, which again enables adaptation of the performance to a given requirement.

An operating panel on the motor terminal box enables setting of required setpoint as well as setting of pump to "Min." or "Max." operation or to "Stop". The Grundfos Eye indicator on the operating panel provides visual indication of pump status:

- "Power on": Motor is running (rotating green indicator lights) or not running (permanently green indicator lights)
- "Warning": Motor is still running (rotating yellow indicator lights) or has stopped (permanently yellow indicator lights)
- "Alarm": Motor has stopped (flashing red indicator lights).

Communication with the pump is possible by means of Grundfos GO Remote (accessory). The remote control enables further settings as well as reading out of a number of parameters such as "Actual value", "Speed", "Power input" and total "Power consumption".

The terminal box has a number of inputs and outputs enabling the motor to be used in advanced applications where many inputs and outputs are required:

- two dedicated digital inputs
- three analog inputs, 0(4)-20 mA, 0-5 V, 0-10 V, 0.5 - 3.5 V
- 5 V voltage supply to potentiometer and sensor
- one analog output, 0-10 V, 0(4)-20 mA
- two configurable digital inputs or open-collector outputs
- two Pt100/Pt1000 inputs
- LiqTec, dry-running protection sensor input
- Grundfos Digital Sensor input and output
- 24 V voltage supply for sensors
- two signal-relay outputs (potential-free contacts)
- GENIbus connection
- interface for Grundfos CIM fieldbus module.

Liquid:

Pumped liquid:	Water
Liquid temperature range:	-20 .. 120 °C
Selected liquid temperature:	20 °C
Density:	998.2 kg/m³

Technical:

Pump speed on which pump data are based:	3501 rpm
Rated flow:	12.1 m³/h
Rated head:	34.9 m
Pump orientation:	Vertical
Shaft seal arrangement:	Single
Code for shaft seal:	HQQE
Approvals on nameplate:	CE,EAC,UKCA,WRAS,ACS

Qty.	Description	
	Curve tolerance:	ISO9906:2012 3B
	Materials:	
	Base:	Cast iron
		EN 1561 EN-GJL-200
		ASTM A48-25B
	Impeller:	Stainless steel
		EN 1.4301
		AISI 304
	Bearing:	SIC
	Installation:	
	Maximum ambient temperature:	50 °C
	Maximum operating pressure:	16 bar
	Max pressure at stated temp:	16 bar / 120 °C
		16 bar / -20 °C
	Type of connection:	DIN / JIS
	Size of inlet connection:	DN 40
	Size of outlet connection:	DN 40
	Pressure rating for connection:	PN 25
	Flange rating inlet:	300 lb
	Flange size for motor:	FT115
	Electrical data:	
	Motor standard:	IEC
	Motor type:	90LD
	IE Efficiency class:	IE5
	Rated power - P2:	2.2 kW
	Power (P2) required by pump:	2.2 kW
	Mains frequency:	50 / 60 Hz
	Rated voltage:	3 x 380-500 V
	Rated current:	4.15-3.40 A
	Cos phi - power factor:	0.93-0.87
	Rated speed:	360-4000 rpm
	Efficiency:	90.1%
	Motor efficiency at full load:	90.1 %
	Enclosure class (IEC 34-5):	IP55
	Insulation class (IEC 85):	F
	Motor No:	98190193
	Controls:	
	Frequency converter:	Built-in
	Pressure sensor:	N
	Others:	
	Minimum efficiency index, MEI ≥:	0.70
	DOE Pump Energy Index CL:	0.00
	DOE Pump Energy Index VL:	0.00
	Net weight:	45 kg
	Gross weight:	49 kg
	Shipping volume:	0.143 m³
	Danish VVS No.:	385943703
	Finnish LVI No.:	4925653
	Country of origin:	HU
	Custom tariff no.:	84137075

98390267 CRE 10-3 A-FJ-A-E-HQQE

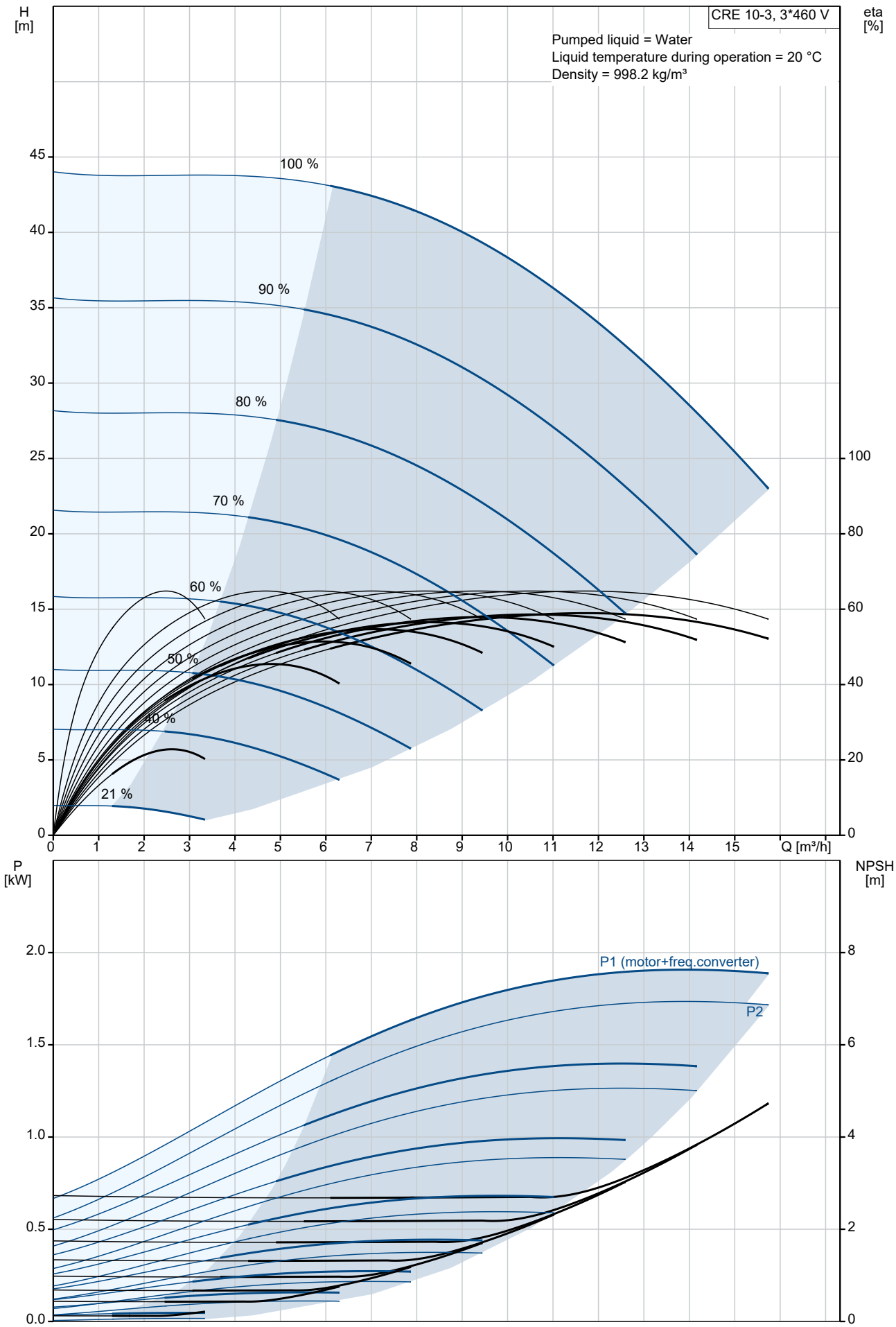

Description	Value
General information:	
Product name:	CRE 10-3 A-FJ-A-E-HQQE
Product No:	98390267
EAN number:	5711494194070
Technical:	
Pump speed on which pump data are based:	3501 rpm
Rated flow:	12.1 m³/h
Rated head:	34.9 m
Maximum head:	44.2 m
Stages:	3
Impellers:	3
Number of reduced-diameter impellers:	0
Low NPSH:	N
Pump orientation:	Vertical
Shaft seal arrangement:	Single
Code for shaft seal:	HQQE
Approvals on nameplate:	CE,EAC,UKCA,WRAS,ACS
Curve tolerance:	ISO9906:2012 3B
Pump version:	A
Model:	A
Materials:	
Base:	Cast iron
Base:	EN 1561 EN-GJL-200
Base:	ASTM A48-25B
Impeller:	Stainless steel
Impeller:	EN 1.4301
Impeller:	AISI 304
Material code:	A
Code for rubber:	E
Bearing:	SIC
Installation:	
Maximum ambient temperature:	50 °C
Maximum operating pressure:	16 bar
Max pressure at stated temp:	16 bar / 120 °C
Max pressure at stated temp:	16 bar / -20 °C
Type of connection:	DIN / JIS
Size of inlet connection:	DN 40
Size of outlet connection:	DN 40
Pressure rating for connection:	PN 25
Flange rating inlet:	300 lb
Flange size for motor:	FT115
Connect code:	FJ
Liquid:	
Pumped liquid:	Water
Liquid temperature range:	-20 .. 120 °C
Selected liquid temperature:	20 °C
Density:	998.2 kg/m³
Electrical data:	
Motor standard:	IEC
Motor type:	90LD
IE Efficiency class:	IE5
Rated power - P2:	2.2 kW
Power (P2) required by pump:	2.2 kW
Mains frequency:	50 / 60 Hz
Rated voltage:	3 x 380-500 V
Rated current:	4.15-3.40 A
Cos phi - power factor:	0.93-0.87
Rated speed:	360-4000 rpm
Efficiency:	90.1%
Motor efficiency at full load:	90.1 %
Enclosure class (IEC 34-5):	IP55
Insulation class (IEC 85):	F

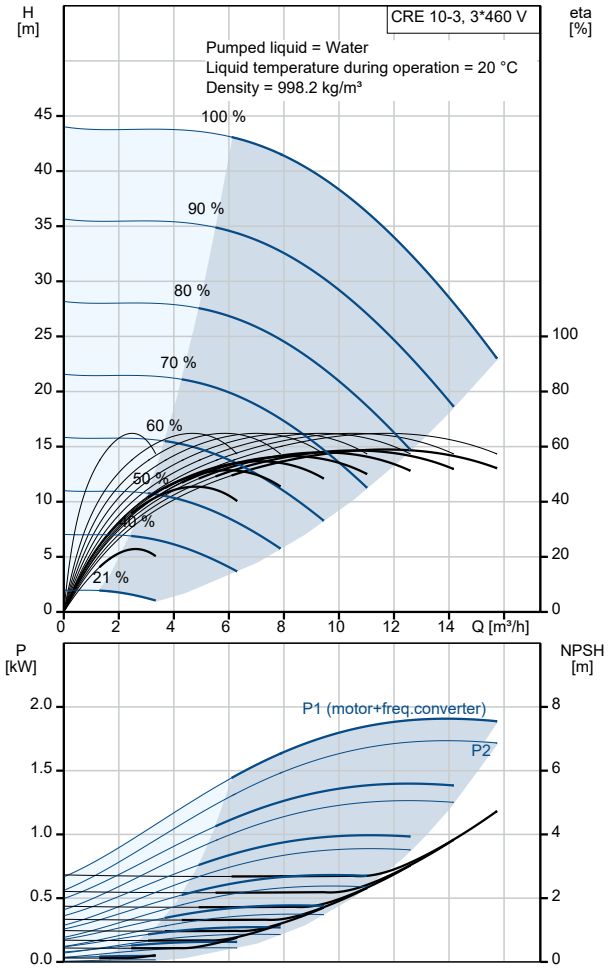

Description	Value
Motor protec:	ELEC
Motor No:	98190193
Controls:	
Control panel:	Standard
Function Module:	FM300 - Advanced
Frequency converter:	Built-in
Pressure sensor:	N
Others:	
Minimum efficiency index, MEI ≥:	0.70
DOE Pump Energy Index CL:	0.00
DOE Pump Energy Index VL:	0.00
Net weight:	45 kg
Gross weight:	49 kg
Shipping volume:	0.143 m^3
Config. file no:	98500484
Danish VVS No.:	385943703
Finnish LVI No.:	4925653
Country of origin:	HU
Custom tariff no.:	84137075

98390267 CRE 10-3 A-FJ-A-E-HQQE

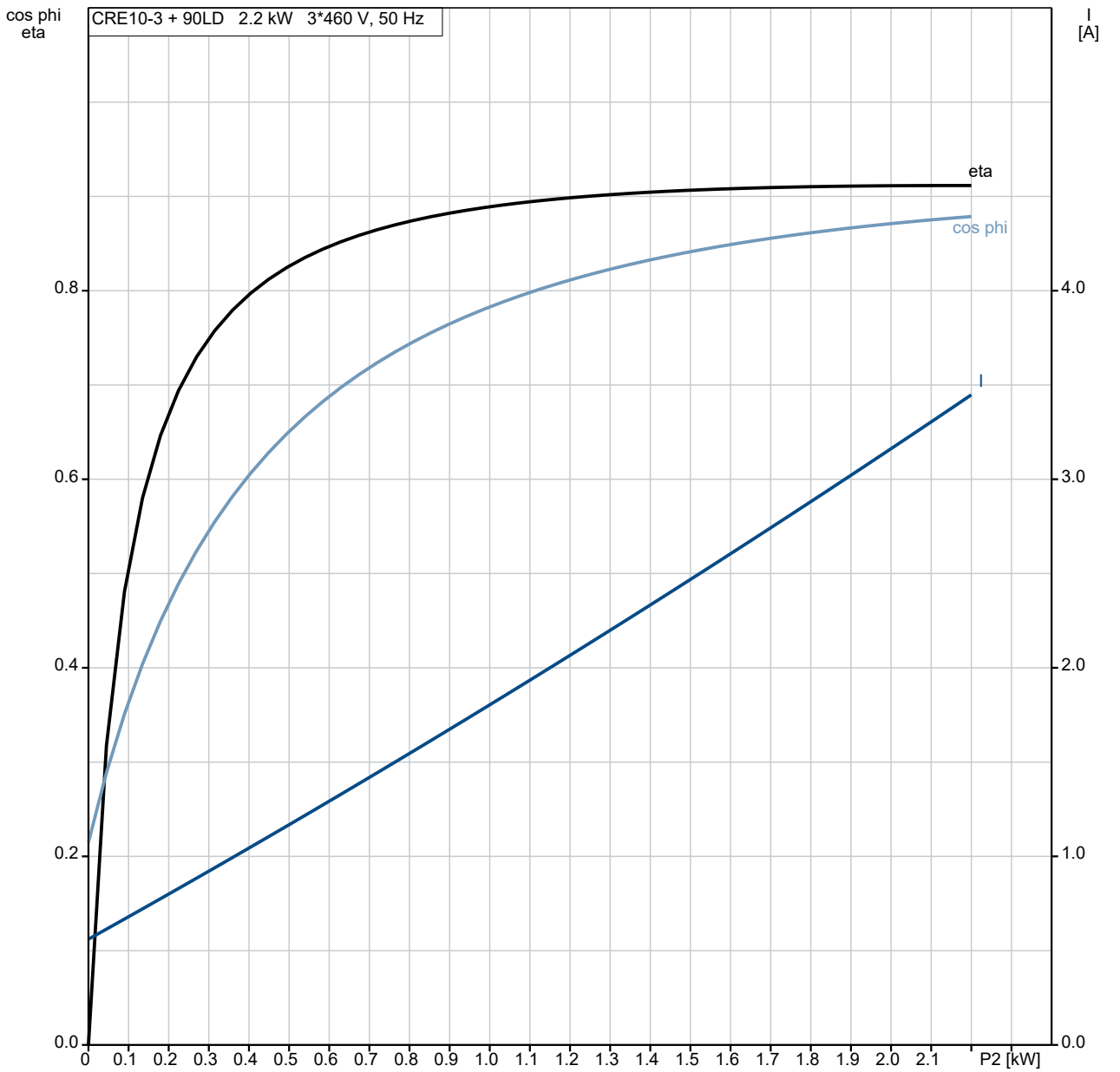

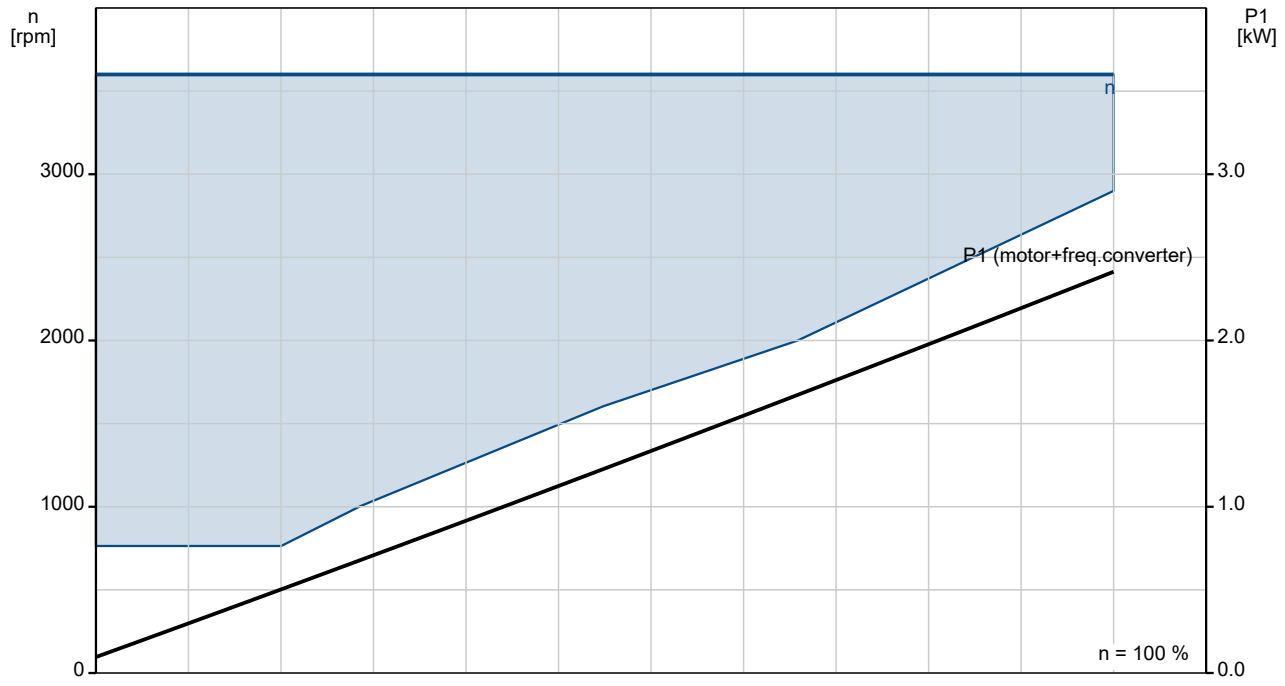

98390267 CRE 10-3 A-FJ-A-E-HQQE

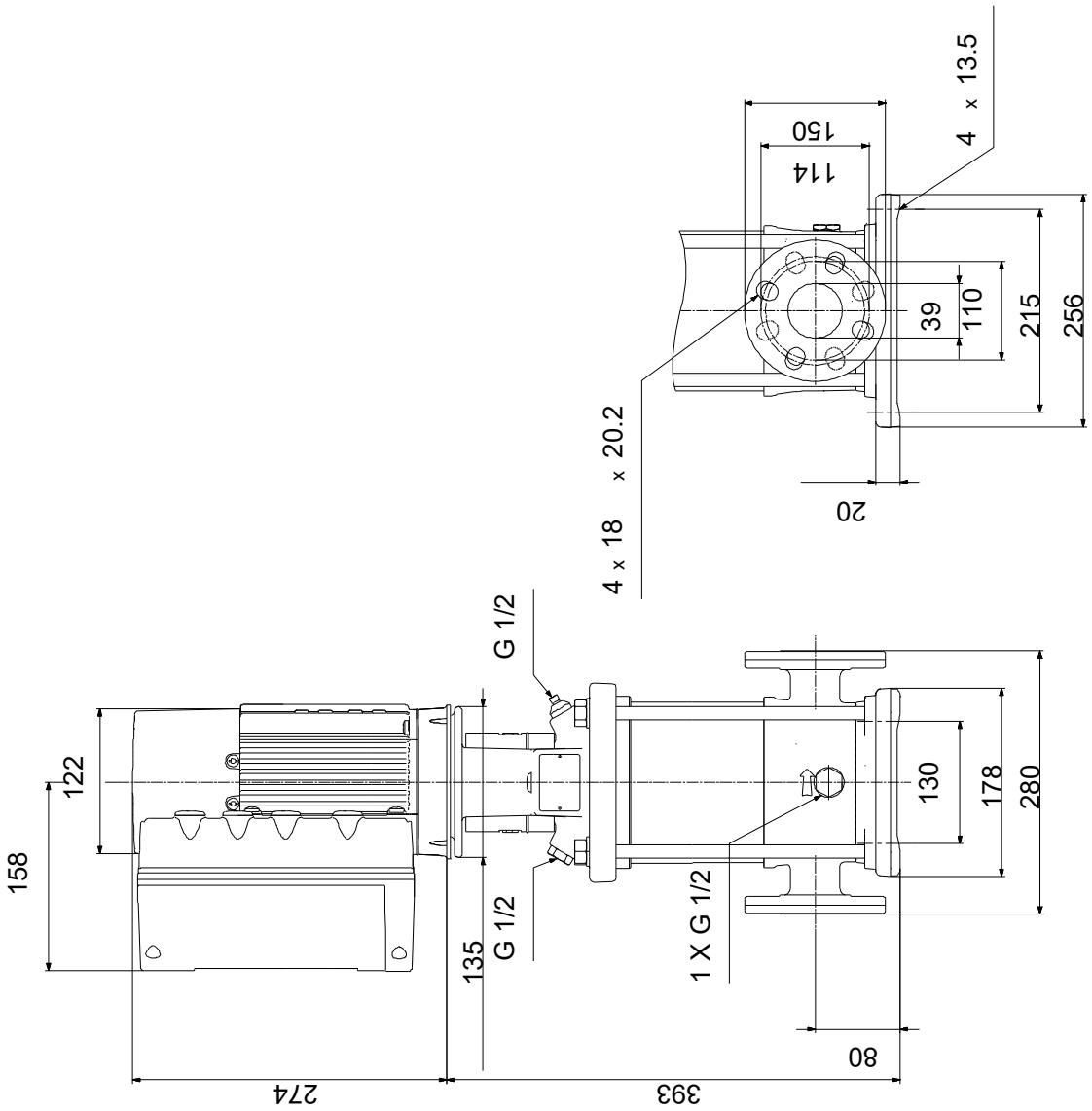

Note! All units are in [mm] unless others are stated.
Disclaimer: This simplified dimensional drawing does not show all details.

Spare parts CRE 10-3, Product No. 98390267
Produced After 1252 (production year and week number)

Pos	Omschrijving	Opmerking tekst	Classificatie Gegevens	Onderdeelnr.	Aanta	Eenhei
-	Kit, chamber stack			96508405	1	pcs
- 80	Chamber stack		Bearing type: SIC		1	
- 3	Top intermediate chamber					1
	Spare, turbulence optimizer KP					
	Guide vane					
- 4a	Intermediate chamber cpl.					1
	Guide cup					
	Bearing plate					
	Guide vane					
3	Intermediate chamber					
45	Neck ring cpl.					
47	Bearing bush					
65	Retainer					
- 4	Intermediate chamber cpl.					1
	Sand Lifter					
	Guide cup					
	Front plate					
	Guide vane					
3	Intermediate chamber					
45	Neck ring cpl.					
65	Retainer					
26a	Strap cpl.					2
26.c	Washer		Designation: DIN 125A			2
			Thickness: 1,6			
26.b	Hex head screw					2
44b	Inlet part					1
- 44a	Inlet part cpl.					1
	Guide cup					
	Inlet part					
45	Neck ring cpl.					
65	Retainer					
47a	Bearing ring					1
49	Impeller cpl.					3
- 51	Shaft, spline, cpl.					1
	Bar					
62	Stop ring					
64c	Spacer					1
64a	Spacing bush		Length (mm): 9.00			1
64.d	Spacer					1
64	Spacing pipe		Length (mm): 29.05			1
66	Wedge lock washer					1
67	Lock nut		Thread: M8			1
69	Spacing bush		Length (mm): 18.00			1
-	Kit, coupling			96511319	1	pcs
	Adjusting fork				1	
9	Hex socket head cap screw		Designation: DIN 912		4	
			Length (mm): 25			
			Thread: M8			
10a	Coupling half				2	
10	Shaft pin		Diameter: 5		1	
			Length (mm): 26			
-	Kit, coupling guard			96509612	1	pcs
7.a	Combi Slot Torx screw				4	
7	Coupling guard				2	
-	Kit, gaskets			96509609	1	pcs
	Gasket				2	
24	O-ring				2	

Pos	Omschrijving	Opmerking tekst	Classificatie Gegevens	Onderdeelnr.	Aanta	Eenhei
37	O-ring				2	
38	O-ring				1	
38	O-ring				1	
38	O-ring				2	
60	Spring				4	
415	Gasket		Internal diameter: 44		2	
			Outer diameter: 60			
			Thickness: 2			
441 b	Gasket		Internal diameter: 49		2	
			Outer diameter: 92			
			Thickness: 2			
-	Kit, plug			96511311	1	pcs
- 18	Air vent screw				1	
	Spindle					1
	Plug					1
25a	Drain plug				1	
25	Plug				1	
38	O-ring				1	
38	O-ring				1	
38	O-ring				2	
38	O-ring		Diameter: 5,3		1	
			Material type: FKM			
			Thickness: 2,4			
38	O-ring		Diameter: 16,3		1	
			Material type: FKM			
			Thickness: 2,4			
38	O-ring		Diameter: 16,3		2	
			Material type: FKM			
			Thickness: 2,4			
-	Kit, shaft seal HQQE			96511844	1	pcs
105	Shaft seal		Material type: HQQE		1	
-	Kit, wear parts			96511889	1	pcs
- 4a	Intermediate chamber cpl.				1	
	Sand Lifter					1
	Guide cup					1
	Bearing plate					1
	Guide vane					10
3	Intermediate chamber					1
45	Neck ring cpl.					1
47	Bearing bush					1
65	Retainer					1
26.c	Washer		Designation: DIN 125A		2	
			Thickness: 1,6			
26.b	Hex head screw				2	
45	Neck ring cpl.				7	
47a	Bearing ring				1	
62	Retaining ring				1	
64c	Spacer				1	
64a	Spacing bush		Length (mm): 9.00		1	
64.d	Spacer				1	
65	Retainer				7	
66	Wedge lock washer				1	
67	Lock nut		Thread: M8		1	
-	Motor			99131993	1	pcs
-	Kit, adapter			98345796	1	
- 252 a	Adapter set					1
	Adapter					
	Adapter					
167	Cable gland					
-	Kit, bearing cpl.			98330605	1	

Pos	Omschrijving	Opmerking tekst	Classificatie Gegevens	Onderdeelnr.	Aanta	Eenhei
111	Ball bearing		Designation: 6204.2Z.C3.SYN			1
154	Ball bearing					1
156 d	Gasket		Internal diameter: 114,80			1
			Outer diameter: 121,20			
			Thickness: 0,25			
156 c	Seal ring					1
156 c	Seal ring					1
157	O-ring		Diameter: 47			1
			Material type: NBR			
			Thickness: 3			
158	Waved washer					1
-	Kit, Blanking plug			98334761	1	
252 b	Plug cpl.					4
-	Kit, cable gland			98337336	1	
- 293	Cable glands set			98271484		1
167	Cable gland					
167	Cable gland					
-	Kit, connector plugs			98403113	1	
266	Connector plug 10-pole					1
266	Connector plug 2-pole					1
266	Connector plug 8-pole					1
266	Connector plug 8-pole					1
266	Connector plug 8-pole					1
266	Connector plug 3-pole					1
266	Connector plug 3-pole					1
266	Connector plug 3-pole					1
-	Kit, control box			98406659	1	
152	Pan head thread forming screw					1
166	Torx Screw					2
178	Pan head thread forming screw					4
251 d	Pan head thread forming screw					4
251 b	Control box					1
251 a	Control box					1
252 b	Plug cpl.					4
266	Connector plug 8-pole					1
266	Connector plug 3-pole					1
268 a	Base					1
268	Pan head screw					1
273 b	Battery					1
273	Funct. Module cpl.					1
275 a	Pin					1
277 a	Cross recess Pan head screw					1
277 a	Cross recess Pan head screw					1
277 a	Cross recess Pan head screw					5
277	Isolation cover					1
286	Spacer					1
286	Spacer					1
287	Cover					1
288 b	Retaining ring					6
288 a	Pan head thread forming screw					6

Pos	Omschrijving	Opmerking tekst	Classificatie Gegevens	Onderdeelnr.	Aanta	Eenhei
288	Wire clamp					3
289	Wire clamp					1
290	Control panel, cpl.					1
-	Kit, Control box upper			98334765	1	
251 d	Pan head thread forming screw					4
251 b	Control box					1
	Kit, Control panel			98939973	1	
-	Kit, cover			98330622	1	
287	Cover					1
-	Kit, fan			98290124	1	
152	Pan head thread forming screw					4
156 c	Seal ring					1
156	Fan					1
-	Kit, flange (DE)			98290128	1	
156 d	Gasket		Internal diameter: 114,80			1
			Outer diameter: 121,20			
			Thickness: 0,25			
156 b	Flange					1
185	Cross recess Pan head screw					4
186	Drain plug					1
188	Retaining ring					1
-	Kit, Funct. module			98334777	1	
273 a	Cross recess Pan head screw					5
273	Funct. Module cpl.					1
275 a	Pin					1
286	Spacer					1
-	Kit, Isolation cover			98330625	1	
277 a	Cross recess Pan head screw					1
277	Isolation cover					1
-	Kit, Lower part cpl.			98330619	1	
178	Pan head thread forming screw					4
251 a	Control box cpl.					1
275 a	Pin					1
277 a	Cross recess Pan head screw					1
277	Isolation cover					1
-	Kit, motor			98293865	1	
	Terminal					3
99a	Retaining ring					1
99	Retaining ring					1
111	Ball bearing		Designation: 6204.2Z.C3.SYN			1
150	Stator					1
150	Stator housing					1
151	Fan cover					1
152	Pan head thread forming screw					4
154	Ball bearing					1
156 d	Gasket		Internal diameter: 114,80			1
			Outer diameter: 121,20			
			Thickness: 0,25			
156 c	Seal ring					1
156 c	Seal ring					1
156 b	Flange					1

Pos	Omschrijving	Opmerking tekst	Classificatie Gegevens	Onderdeelnr.	Aanta	Eenhei
156	Fan					1
157	O-ring		Diameter: 47			1
			Material type: NBR			
			Thickness: 3			
158	Waved washer					1
172	Shaft w/rotor					1
178	Pan head thread forming screw					4
185	Cross recess Pan head screw					4
186	Drain plug					1
203	Terminal plug					1
289 a	Pan head thread forming screw					1
-	Kit, plug			99369622	1	
	Terminal					3
203	Terminal plug					1
205	Pan head thread forming screw					1
-	Kit, screws			98330627	1	
268 a	Base					1
268	Pan head screw					1
288 b	Retaining ring					6
288 a	Pan head thread forming screw					6
288	Wire clamp					3
289 a	Pan head thread forming screw					1
289	Wire clamp					1
-	Kit, staybolts			98881544	1	
181	Pan head staybolt					4
	Pan head thread forming screw			99598708	4	
111	Ball bearing		Designation: 6204.2Z.C3.SYN	97914979	1	
152	Pan head thread forming screw			99834207	1	
152	Pan head thread forming screw			99814578	1	
156 d	Gasket		Internal diameter: 114,80	99406425	1	
			Outer diameter: 121,20			
			Thickness: 0,25			
156	Fan			96591801	1	
159 a	Seal ring			97689816	1	
186	Drain plug			99980519	1	
251 d	Pan head thread forming screw			98995460	4	
266	Connector plug 3-pole			99421265	1	
2a	Pump head			98852386	1	pcs
3	Top intermediate chamber			96538970	1	pcs
3	Top intermediate chamber			98415149	1	pcs
4a	Intermediate chamber cpl.			96538850	1	pcs
4a	Intermediate chamber cpl.			98371073	1	pcs
- 4	Intermediate chamber cpl.			96538818	1	pcs
3	Intermediate chamber			96536045	1	
3	Intermediate chamber			98415145	1	
45	Neck ring cpl.			96538856	1	
65	Retainer			98354675	1	
4	Intermediate chamber cpl.			98371071	1	pcs
6	Base			98681110	1	pcs
7.a	Combi Slot Torx screw			96886324	4	pcs
10	Shaft pin		Diameter: 5	96536473	1	pcs
			Length (mm): 26			
10	Shaft pin		Diameter: 5	96587588	1	pcs
			Length (mm): 26			
18	Air vent screw			96547461	1	pcs
18	Air vent screw			95061351	1	pcs
25	Plug			96536013	1	pcs

Pos	Omschrijving	Opmerking tekst	Classificatie Gegevens	Onderdeelnr.	Aanta	Eenhei
25a	Drain plug			96535881	1	pcs
26a	Strap cpl.			98980041	2	pcs
26.c	Washer		Designation: DIN 125A	99262704	2	pcs
			Thickness: 1,6			
26.c	Washer		Designation: DIN 125A	99886930	2	pcs
			Thickness: 1,6			
26	Staybolt		Length (mm): 163	98680984	4	pcs
			Thread: M16			
26	Staybolt		Length (mm): 163	98680982	4	pcs
			Thread: M16			
28	Hex head screw		Length (mm): 20	99932722	4	pcs
			Thread: M8			
32	Washer		Designation: DIN 125 A	98923051	4	pcs
			Internal diameter: 17			
			Outer diameter: 30			
			Thickness: 3			
36	Hex nut		Thread: M16	96620480	4	pcs
37	O-ring			96538857	2	pcs
38	O-ring			99198791	1	pcs
38	O-ring			99198815	2	pcs
38	O-ring			99412727	2	pcs
44b	Inlet part			98814595	1	pcs
44a	Inlet part cpl.			97973678	1	pcs
47a	Bearing ring			96538795	1	pcs
49	Impeller cpl.			96538796	3	pcs
49	Impeller cpl.			98394441	3	pcs
51	Shaft, spline, cpl.			98368605	1	pcs
55	Outer sleeve			98812619	1	pcs
60	Spring			96538963	4	pcs
64c	Spacer			97980241	1	pcs
64a	Spacing bush		Length (mm): 9.00	96538950	1	pcs
64.d	Spacer			97516851	1	pcs
64	Spacing pipe		Length (mm): 29.05	96535101	1	pcs
66	Wedge lock washer			96536157	1	pcs
66	Wedge lock washer			92575609	1	pcs
67	Lock nut		Thread: M8	98277008	1	pcs
69	Spacing bush		Length (mm): 18.00	96538948	1	pcs
76a	Rivet			96620489	1	pcs
105	Shaft seal		Material type: HQQE	96538914	1	pcs