# Inventflow: Grundfos A-partner

## Grundfos TPE2 50-60 N-A-F-I-BQQE-DAB

Find the pump here:
https://inventflow.nl/en/pompenfilter/tpe2/grundfos-tpe2-50-60-n-a-f-i-bqqe-dab

### Contact

info@inventflow.nl
+31 (0) 546 45 80 72

### Datasheet

| Qty. | Description |
|---|---|
| 1 | **TPE2 50-60 N-A-F-I-BQQE-DAB** |

**Note! Product picture may differ from actual product**

Product No.: 98416592

Single-stage, close-coupled, volute pump with in-line suction and discharge ports of identical diameter.
The pump is of the top-pull-out design, i.e. the power head (motor, pump head and impeller) can be removed for maintenance or service while the pump housing remains in the pipework.

The shaft seal is according to EN 12756. Pipework connection is via PN 6/10 DIN flanges (EN 1092-2 and ISO 7005-2).

The pump is fitted with a fan-cooled, permanent-magnet synchronous motor. The motor efficiency is classified as IE5 in accordance with IEC 60034-30-2.

Controls:

| | |
|---|---|
| Frequency converter: | Built-in |

Liquid:

| | |
|---|---|
| Pumped liquid: | Water |
| Liquid temperature range: | -25 .. 120 °C |
| Selected liquid temperature: | 20 °C |
| Density: | 998.2 kg/m³ |

Technical:

| | |
|---|---|
| Pump speed on which pump data are based: | 2500 rpm |
| Rated flow: | 16.3 m³/h |
| Rated head: | 3.9 m |
| Actual impeller diameter: | 74 mm |
| Code for shaft seal: | BQQE |
| Curve tolerance: | ISO9906:2012 3B2 |

Materials:

| | |
|---|---|
| Pump housing: | Stainless steel<br>EN 1.4308<br>ASTM CF8 |
| Impeller: | Composite<br>PES+30% GF |

Installation:

| | |
|---|---|
| Range of ambient temperature: | -20 .. 50 °C |
| Maximum operating pressure: | 10 bar |
| Max pressure at stated temp: | 10 bar / 120 °C |
| Type of connection: | DIN |
| Size of connection: | DN 50 |
| Pressure rating for connection: | PN 6/10 |
| Port-to-port length: | 280 mm |
| Flange size for motor: | 56C |

Electrical data:

| | |
|---|---|
| Motor type: | 71A |
| IE Efficiency class: | IE5 |

| Qty. | Description | |
|---|---|---|
| | Rated power - P2: | 0.37 kW |
| | Mains frequency: | 50 / 60 Hz |
| | Rated voltage: | 1 x 200-240 V |
| | Rated current: | 2.40-2.10 A |
| | Cos phi - power factor: | 0.96 |
| | Rated speed: | 360-4000 rpm |
| | Efficiency: | 84.0% |
| | Motor efficiency at full load: | 84.0 % |
| | Enclosure class (IEC 34-5): | IP55 |
| | Insulation class (IEC 85): | F |
| | Motor No: | 99137991 |
| | | |
| | Others: | |
| | Minimum efficiency index, MEI ≥: | 0.70 |
| | Net weight: | 25 kg |
| | Gross weight: | 32.2 kg |
| | Shipping volume: | 0.1 m³ |
| | Country of origin: | HU |
| | Custom tariff no.: | 84137051 |

# 98416592 TPE2 50-60 N-A-F-I-BQQE-DAB

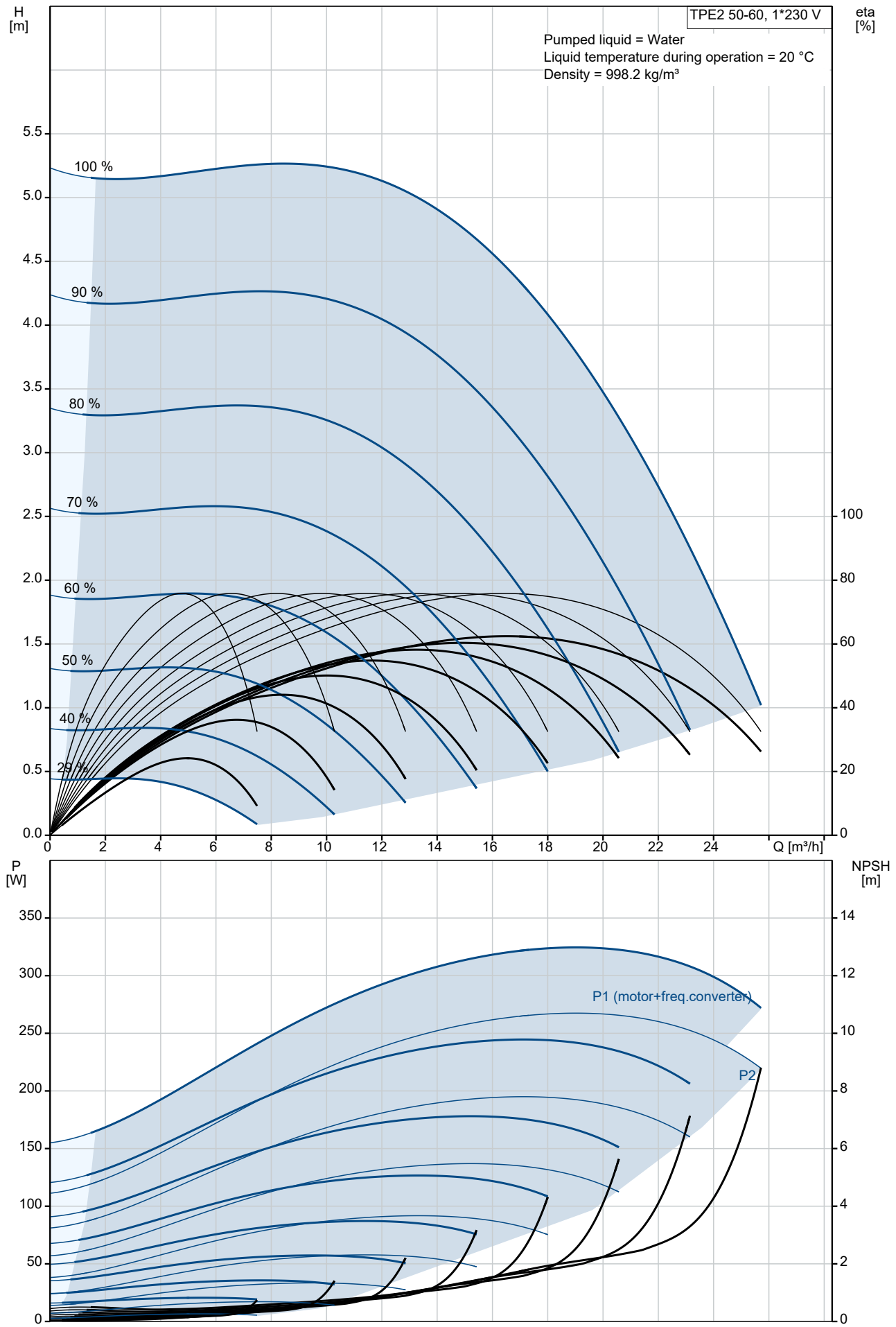

| Description | Value |
|---|---|
| **General information:** | |
| Product name: | TPE2 50-60<br>N-A-F-I-BQQE-DAB |
| Product No: | 98416592 |
| EAN number: | 5711494653508 |
| **Technical:** | |
| Pump speed on which pump data are based: | 2500 rpm |
| Rated flow: | 16.3 m³/h |
| Rated head: | 3.9 m |
| Maximum head: | 60 dm |
| Actual impeller diameter: | 74 mm |
| Code for shaft seal: | BQQE |
| Curve tolerance: | ISO9906:2012 3B2 |
| Pump version: | A |
| **Materials:** | |
| Pump housing: | Stainless steel |
| Pump housing: | EN 1.4308 |
| Pump housing: | ASTM CF8 |
| Impeller: | Composite |
| Impeller: | PES+30% GF |
| Material code: | I |
| **Installation:** | |
| Range of ambient temperature: | -20 .. 50 °C |
| Maximum operating pressure: | 10 bar |
| Max pressure at stated temp: | 10 bar / 120 °C |
| Type of connection: | DIN |
| Size of connection: | DN 50 |
| Pressure rating for connection: | PN 6/10 |
| Port-to-port length: | 280 mm |
| Flange size for motor: | 56C |
| Connect code: | F |
| **Liquid:** | |
| Pumped liquid: | Water |
| Liquid temperature range: | -25 .. 120 °C |
| Selected liquid temperature: | 20 °C |
| Density: | 998.2 kg/m³ |
| **Electrical data:** | |
| Motor type: | 71A |
| IE Efficiency class: | IE5 |
| Rated power - P2: | 0.37 kW |
| Mains frequency: | 50 / 60 Hz |
| Rated voltage: | 1 x 200-240 V |
| Rated current: | 2.40-2.10 A |
| Cos phi - power factor: | 0.96 |
| Rated speed: | 360-4000 rpm |
| Efficiency: | 84.0% |
| Motor efficiency at full load: | 84.0 % |
| Enclosure class (IEC 34-5): | IP55 |
| Insulation class (IEC 85): | F |
| Motor protec: | ELEC |
| Motor No: | 99137991 |
| **Controls:** | |
| Control panel: | HMI200 - Standard |
| Function Module: | FM300 - Advanced |
| Frequency converter: | Built-in |
| **Others:** | |
| Minimum efficiency index, MEI ≥: | 0.70 |
| Net weight: | 25 kg |
| Gross weight: | 32.2 kg |
| Shipping volume: | 0.1 m³ |
| Config. file no: | 98819174 |
| Country of origin: | HU |
| Custom tariff no.: | 84137051 |

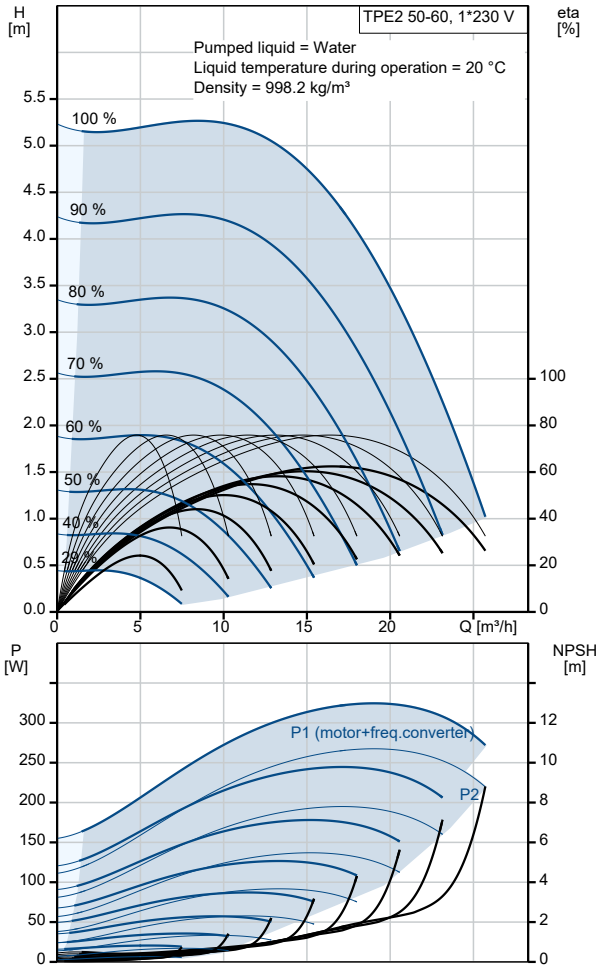

# 98416592 TPE2 50-60 N-A-F-I-BQQE-DAB

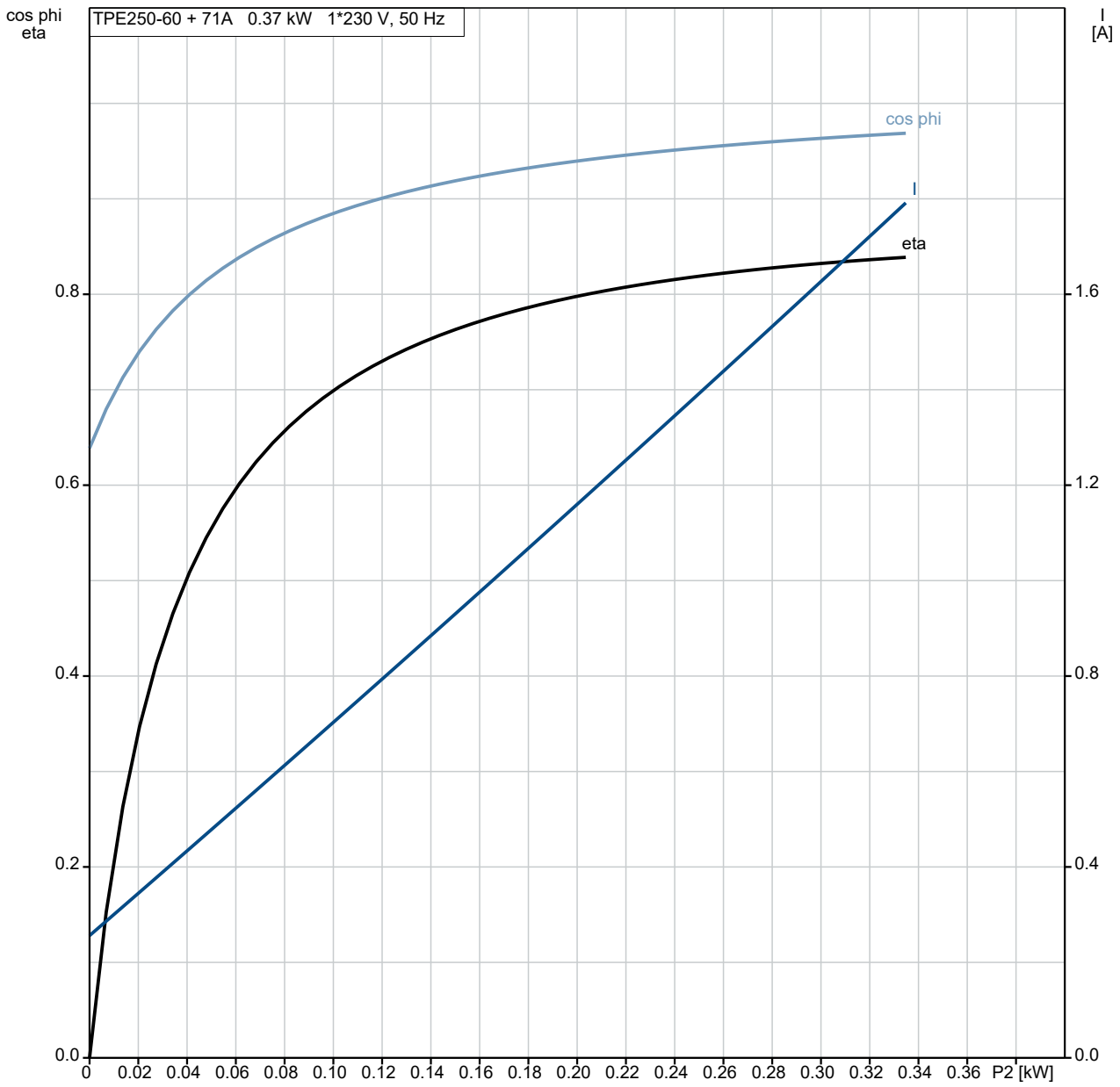


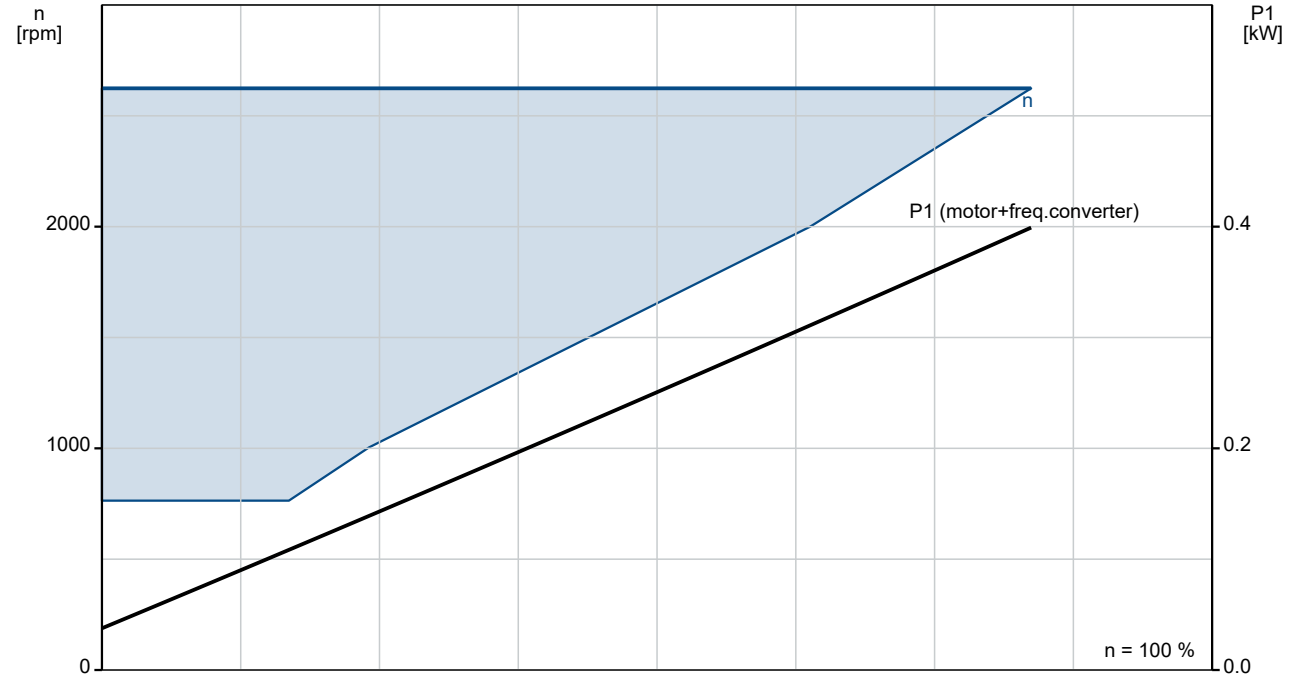

# 98416592 TPE2 50-60 N-A-F-I-BQQE-DAB

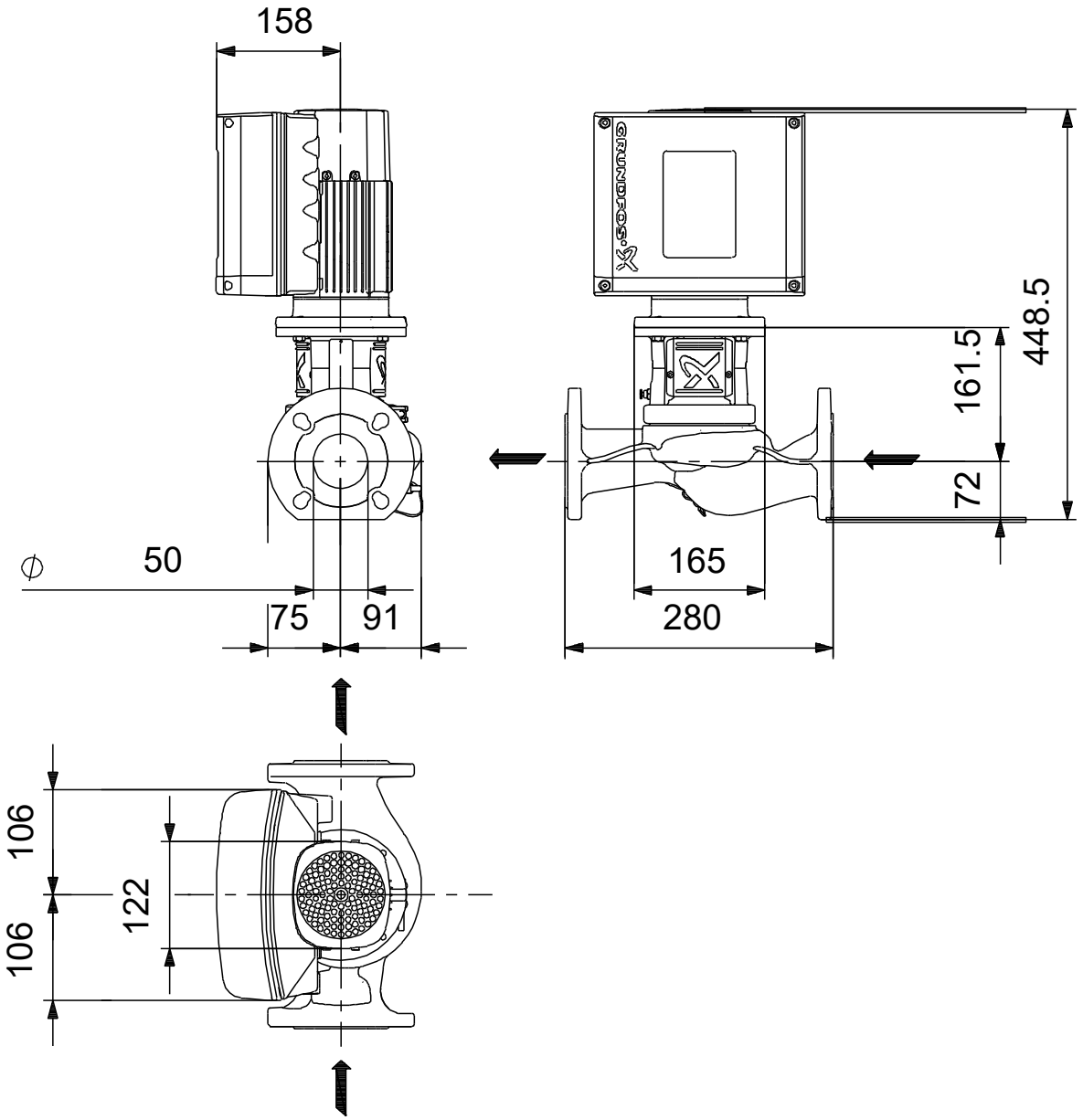


Note! All units are in [mm] unless others are stated.
Disclaimer: This simplified dimensional drawing does not show all details.

# Spare parts TPE2 50-60, Product No. 98416592
# Produced After 1804 (production year and week number)

| Pos | Omschrijving | Opmerking tekst | Classificatie Gegevens | Onderdeelnr. | Aantal | Eenheid |
|---|---|---|---|---|---|---|
| - | Kit, clamp | | | 98660114 | 1 | pcs |
| 92 | Clamp cpl. | | | | 1 | |
| - | Kit, impeller | | | 98660096 | 1 | pcs |
| 11b | Key | | | | 1 | |
| 45 | Neck ring cpl. | | | | 1 | |
| - 49 | Impeller cpl. | | | | 1 | |
| | Impeller cpl. | | | | | 1 |
| 66a | Wedge lock washer | | | | 1 | |
| 67 | Lock nut | | Thread: M8 | | 1 | |
| - | Kit, pump shaft | | | 99131305 | 1 | pcs |
| 9 | Socket set screw | | | | 3 | |
| 51 | Shaft | | | | 1 | |
| - | Kit, shaft seal BQQE | | | 98660103 | 1 | pcs |
| 105 | Shaft seal | | | | 1 | |
| 301a | O-ring | | | | 1 | |
| + | Pump housing cpl. | | | 99688800 | 1 | pcs |
| - | Motor | | | | 1 | pcs |
| - | Kit, adapter | | | 98345796 | 1 | |
| - 252a | Adapter set | | | | | 1 |
| | Adapter | | | | | |
| | Adapter | | | | | |
| 167 | Cable gland | | | | | |
| - | Kit, bearing cpl. | | | 98330604 | 1 | |
| 111 | Ball bearing | | Designation: 6304.2Z.C3.SYN | | | 1 |
| 111 | Ball bearing | | Designation: 6204.2Z.C3.SYN | | | 1 |
| 156d | Gasket | | Internal diameter: 114,80 | | | 1 |
| | | | Outer diameter: 121,20 | | | |
| | | | Thickness: 0,25 | | | |
| 156c | Seal ring | | | | | 2 |
| 158a | O-ring | | Diameter: 47 | | | 1 |
| | | | Material type: NBR | | | |
| | | | Thickness: 3 | | | |
| 158 | Waved washer | | | | | 1 |
| - | Kit, Blanking plug | | | 98334761 | 1 | |
| 252b | Plug cpl. | | | | | 4 |
| - | Kit, cable gland | | | 98337336 | 1 | |
| - 293 | Cable glands set | | | 98271484 | | 1 |
| 167 | Cable gland | | | | | |
| 167 | Cable gland | | | | | |
| - | Kit, connector plugs | | | 98403113 | 1 | |
| 266 | Connector plug 10-pole | | | | | 1 |
| 266 | Connector plug 2-pole | | | | | 1 |
| 266 | Connector plug 8-pole | | | | | 1 |
| 266 | Connector plug 8-pole | | | | | 1 |
| 266 | Connector plug 8-pole | | | | | 1 |
| 266 | Connector plug 3-pole | | | | | 1 |
| 266 | Connector plug 3-pole | | | | | 1 |
| 266 | Connector plug 3-pole | | | | | 1 |
| - | Kit, control box | | | 98406653 | 1 | |
| 152 | Pan head thread forming screw | | | | | 1 |
| 178 | Pan head thread forming screw | | | | | 4 |
| 251d | Pan head thread forming screw | | | | | 4 |

| Pos | Omschrijving | Opmerking tekst | Classificatie Gegevens | Onderdeelnr. | Aantal | Eenheid |
|---|---|---|---|---|---|---|
| 251b | Control box | | | | 1 | |
| 251a | Control box | | | | 1 | |
| 252b | Plug cpl. | | | | 4 | |
| 266 | Connector plug 10-pole | | | | 1 | |
| 266 | Connector plug 2-pole | | | | 1 | |
| 268a | Base | | | | 1 | |
| 268 | Pan head screw | | | | 1 | |
| 273b | Battery | | | | 1 | |
| 273 | Funct. Module cpl. | | | | 1 | |
| 275a | Pin | | | | 1 | |
| 277a | Cross recess Pan head screw | | | | 5 | |
| 277a | Cross recess Pan head screw | | | | 1 | |
| 277a | Cross recess Pan head screw | | | | 1 | |
| 277 | Isolation cover | | | | 1 | |
| 286 | Spacer | | | | 1 | |
| 287 | Cover | | | | 1 | |
| 288b | Retaining ring | | | | 6 | |
| 288a | Pan head thread forming screw | | | | 6 | |
| 288 | Wire clamp | | | | 3 | |
| 289 | Wire clamp | | | | 1 | |
| 290 | Control panel, cpl. | | | | 1 | |
| - | Kit, Control box upper | | | 98334764 | 1 | |
| 251d | Pan head thread forming screw | | | | 4 | |
| 251b | Control box | | | | 1 | |
| - | Kit, Control panel | | | 98939973 | 1 | |
| 290 | Control panel, cpl. | | | | 1 | |
| - | Kit, cover | | | 98330622 | 1 | |
| 287 | Cover | | | | 1 | |
| - | Kit, fan | | | 98290123 | 1 | |
| 152 | Pan head thread forming screw | | | | 4 | |
| 156c | Seal ring | | | | 1 | |
| 156 | Fan | | | | 1 | |
| - | Kit, flange (DE) | | | 99177640 | 1 | |
| 156d | Gasket | | Internal diameter: 114,80 | | 1 | |
| | | | Outer diameter: 121,20 | | | |
| | | | Thickness: 0,25 | | | |
| 156b | Flange | | | | 1 | |
| 185 | Cross recess Pan head screw | | | | 4 | |
| 201c | Drain plug | | | | 3 | |
| - | Kit, Funct. module | | | 98334777 | 1 | |
| 273a | Cross recess Pan head screw | | | | 5 | |
| 273 | Funct. Module cpl. | | | | 1 | |
| 275a | Pin | | | | 1 | |
| 286 | Spacer | | | | 1 | |
| - | Kit, Isolation cover | | | 98330624 | 1 | |
| 277a | Cross recess Pan head screw | | | | 1 | |
| 277 | Isolation cover | | | | 1 | |
| - | Kit, Lower part cpl. | | | 98330614 | 1 | |

| Pos | Omschrijving | Opmerking tekst | Classificatie Gegevens | Onderdeelnr. | Aantal | Eenheid |
|---|---|---|---|---|---|---|
| 178 | Pan head thread forming screw | | | | 4 | |
| 251a | Control box | | | | 1 | |
| 275a | Pin | | | | 1 | |
| 277a | Cross recess Pan head screw | | | | 1 | |
| 277 | Isolation cover | | | | 1 | |
| - | Kit, motor | | | 99259915 | 1 | |
| | Terminal | | | | 3 | |
| 47d | Lock ring | | | | 1 | |
| 111 | Ball bearing | | Designation: 6204.2Z.C3.SYN | | 1 | |
| 150 | Stator | | | | 1 | |
| 150 | Stator housing | | | | 1 | |
| 151 | Fan cover | | | | 1 | |
| 152 | Pan head thread forming screw | | | | 4 | |
| 153 | Ball bearing | | Designation: 6304.2Z.C3.SYN | | 1 | |
| 156d | Gasket | | Internal diameter: 114,80 | | 1 | |
| | | | Outer diameter: 121,20 | | | |
| | | | Thickness: 0,25 | | | |
| 156c | Seal ring | | | | 1 | |
| 156c | Seal ring | | | | 1 | |
| 156b | Flange | | | | 1 | |
| 156 | Fan | | | | 1 | |
| 157 | O-ring | | Diameter: 47 | | 1 | |
| | | | Material type: NBR | | | |
| | | | Thickness: 3 | | | |
| 158 | Waved washer | | | | 1 | |
| 158 | Retaining ring | | | | 1 | |
| 171 | Parallel key | | | | 1 | |
| 172 | Shaft w/rotor | | | | 1 | |
| 178 | Pan head thread forming screw | | | | 4 | |
| 185 | Cross recess Pan head screw | | | | 4 | |
| 186 | Drain plug | | | | 1 | |
| 203 | Terminal plug | | | | 1 | |
| 289a | Pan head thread forming screw | | | | 1 | |
| - | Kit, plug | | | 99369622 | 1 | |
| | Terminal | | | | 3 | |
| 203 | Terminal plug | | | | 1 | |
| 205 | Pan head thread forming screw | | | | 1 | |
| - | Kit, screws | | | 98330627 | 1 | |
| 268a | Base | | | | 1 | |
| 268 | Pan head screw | | | | 1 | |
| 288b | Retaining ring | | | | 6 | |
| 288a | Pan head thread forming screw | | | | 6 | |
| 288 | Wire clamp | | | | 3 | |
| 289a | Pan head thread forming screw | | | | 1 | |
| 289 | Wire clamp | | | | 1 | |
| | Pan head thread forming screw | | | 99598708 | 4 | |
| 111 | Ball bearing | | Designation: 6204.2Z.C3.SYN | 97914979 | 1 | |
| 152 | Pan head thread forming screw | | | 99834207 | 1 | |
| 152 | Pan head thread forming screw | | | 99814578 | 1 | |
| 153 | Ball bearing | | Designation: 6304.2Z.C3.SYN | 99211147 | 1 | |

| Pos | Omschrijving | Opmerking tekst | Classificatie Gegevens | Onderdeelnr. | Aantal | Eenheid |
|---|---|---|---|---|---|---|
| 156d | Gasket | | Internal diameter: 114,80 | 99406425 | 1 | |
| | | | Outer diameter: 121,20 | | | |
| | | | Thickness: 0,25 | | | |
| 158 | Retaining ring | | | 96586427 | 1 | |
| 186 | Drain plug | | | 99980519 | 3 | |
| 251d | Pan head thread forming screw | | | 98995460 | 4 | |
| 7a | Pan head screw | | | 96536492 | 2 | pcs |
| 18 | Plug | | | 96620482 | 1 | pcs |
| 18 | Plug | | | 98164277 | 1 | pcs |
| 28 | Hex head cap screw | | Length (mm): 25 | 99925951 | 4 | pcs |
| | | | Thread: UNC 3/8" | | | |
| 66a | Wedge lock washer | | | 96536157 | 1 | pcs |
| 66a | Wedge lock washer | | | 92575609 | 1 | pcs |
| 67 | Lock nut | | Thread: M8 | 98277008 | 1 | pcs |
| 77 | Motor stool | | | 99247636 | 1 | pcs |