Inventflow: Grundfos A-partner

Grundfos TPE2 D 40-80 N-A-F-A-BQQE-CDB

Find the pump here:
https://inventflow.nl/en/pompenfilter/tpe2/grundfos-tpe2-d-40-80-n-a-f-a-bqqe-cdb

Contact

info@inventflow.nl
+31 (0) 546 45 80 72

Datasheet

Qty.	Description
1	**TPE2 D 40-80 N-A-F-A-BQQE-CDB**

Note! Product picture may differ from actual product

Product No.: 98417139

Single-stage, close-coupled, volute twin-head pump with in-line suction and discharge ports of identical diameter. The twin-head pump is designed with two parallel power-heads.

The pump is of the top-pull-out design, i.e. the power head (motor, pump head and impeller) can be removed for maintenance or service while the pump housing remains in the pipework.

Each power head is fitted with an unbalanced rubber bellows seal.
The shaft seal is according to EN 12756. Pipework connection is via PN 16 DIN flanges (EN 1092-2 and ISO 7005-2).

Each power head is fitted with a fan-cooled, permanent-magnet synchronous motor of identical size. The motor efficiency is classified as IE5 in accordance with IEC 60034-30-2.

Controls:

Frequency converter:	Built-in

Liquid:

Pumped liquid:	Water
Liquid temperature range:	-25 .. 120 °C
Selected liquid temperature:	20 °C
Density:	998.2 kg/m³

Technical:

Pump speed on which pump data are based:	2970 rpm
Rated flow:	11.1 m³/h
Rated head:	5.8 m
Actual impeller diameter:	74 mm
Code for shaft seal:	BQQE
Curve tolerance:	ISO9906:2012 3B2

Materials:

Pump housing:	Cast iron EN-GJL-250 ASTM class 35
Impeller:	Composite PES+30% GF

Installation:

Range of ambient temperature:	-20 .. 50 °C
Maximum operating pressure:	16 bar
Max pressure at stated temp:	16 bar / 120 °C
Type of connection:	DIN
Size of connection:	DN 40
Pressure rating for connection:	PN 16
Port-to-port length:	250 mm
Flange size for motor:	56C

Electrical data:

Motor type:	71A
IE Efficiency class:	IE5

Qty.	Description
	Rated power - P2: 0.25 kW Mains frequency: 50 / 60 Hz Rated voltage: 3 x 380-500 V Rated current: 0.90-0.75 A Cos phi - power factor: 0.58-0.50 Rated speed: 360-4000 rpm Efficiency: 81.2% Motor efficiency at full load: 81.2 % Enclosure class (IEC 34-5): IP55 Insulation class (IEC 85): F Motor No: 99138013 Others: Minimum efficiency index, MEI ≥: 0.70 Net weight: 48.4 kg Gross weight: 61.7 kg Shipping volume: 0.25 m³ Country of origin: HU Custom tariff no.: 84137065

98417139 TPE2 D 40-80 N-A-F-A-BQQE-CDB

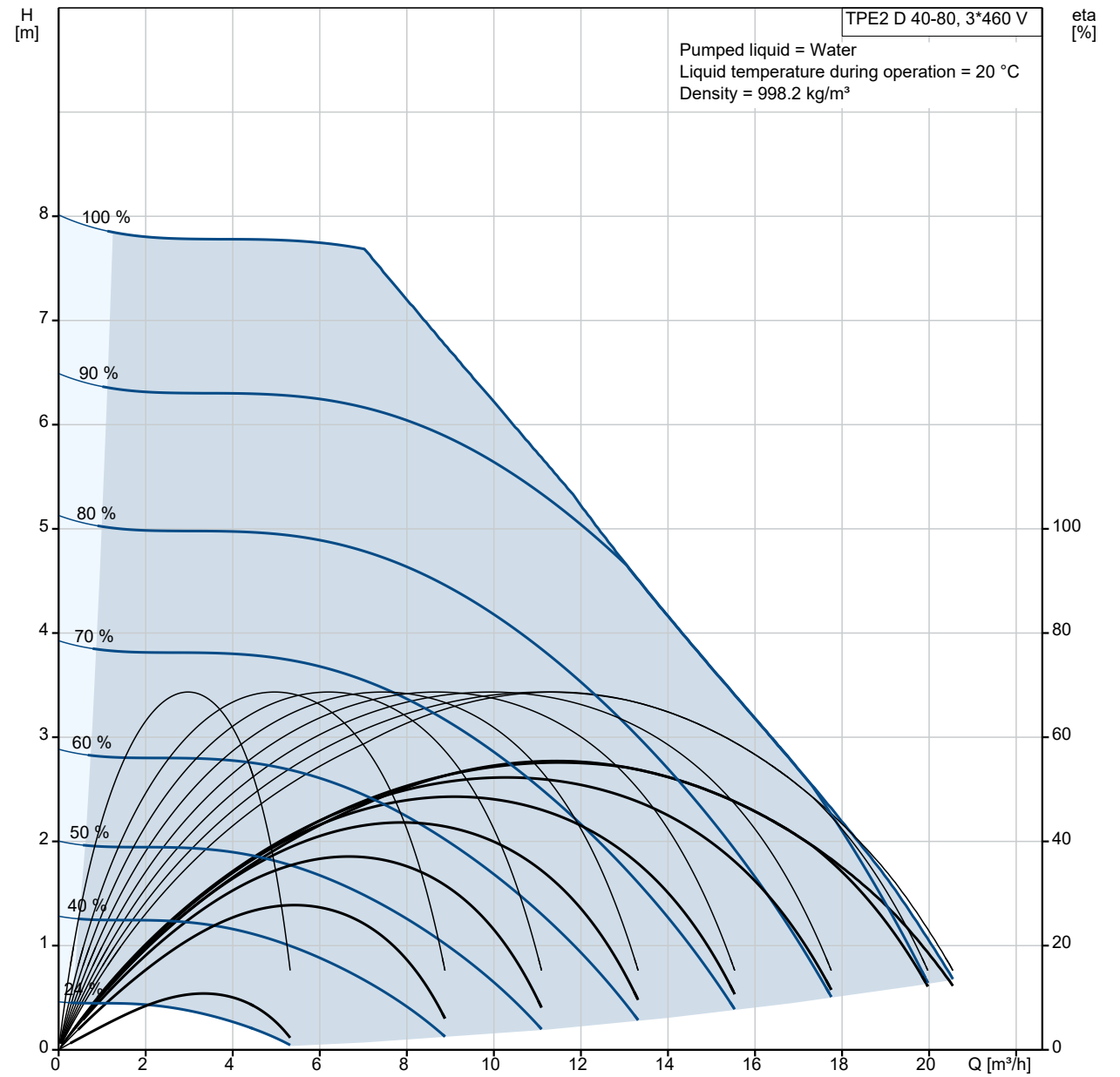

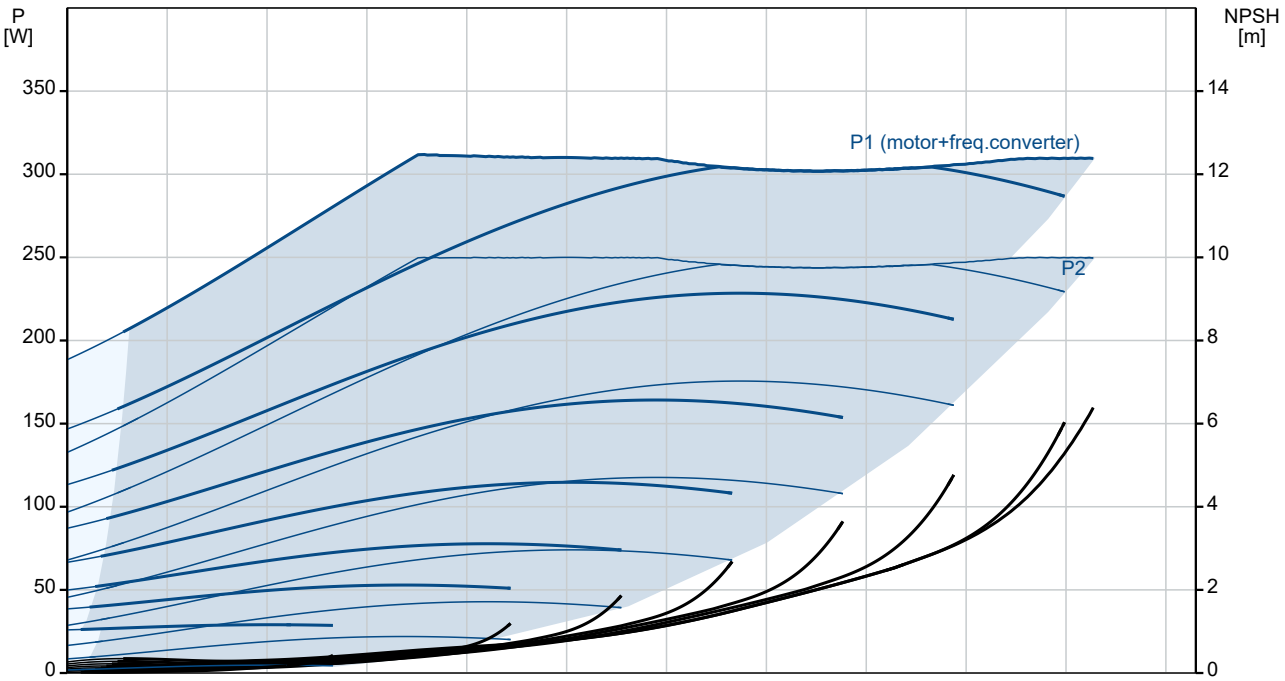

Description	Value
General information:	
Product name:	TPE2 D 40-80 N-A-F-A-BQQE-CDB
Product No:	98417139
EAN number:	5711494659524
Technical:	
Pump speed on which pump data are based:	2970 rpm
Rated flow:	11.1 m³/h
Rated head:	5.8 m
Maximum head:	80 dm
Actual impeller diameter:	74 mm
Code for shaft seal:	BQQE
Curve tolerance:	ISO9906:2012 3B2
Pump version:	A
Materials:	
Pump housing:	Cast iron
Pump housing:	EN-GJL-250
Pump housing:	ASTM class 35
Impeller:	Composite
Impeller:	PES+30% GF
Material code:	A
Installation:	
Range of ambient temperature:	-20 .. 50 °C
Maximum operating pressure:	16 bar
Max pressure at stated temp:	16 bar / 120 °C
Type of connection:	DIN
Size of connection:	DN 40
Pressure rating for connection:	PN 16
Port-to-port length:	250 mm
Flange size for motor:	56C
Connect code:	F
Liquid:	
Pumped liquid:	Water
Liquid temperature range:	-25 .. 120 °C
Selected liquid temperature:	20 °C
Density:	998.2 kg/m³
Electrical data:	
Motor type:	71A
IE Efficiency class:	IE5
Rated power - P2:	0.25 kW
Mains frequency:	50 / 60 Hz
Rated voltage:	3 x 380-500 V
Rated current:	0.90-0.75 A
Cos phi - power factor:	0.58-0.50
Rated speed:	360-4000 rpm
Efficiency:	81.2%
Motor efficiency at full load:	81.2 %
Enclosure class (IEC 34-5):	IP55
Insulation class (IEC 85):	F
Motor protec:	ELEC
Motor No:	99138013
Controls:	
Control panel:	HMI200 - Standard
Function Module:	FM300 - Advanced
Frequency converter:	Built-in
Others:	
Minimum efficiency index, MEI ≥:	0.70
Net weight:	48.4 kg
Gross weight:	61.7 kg
Shipping volume:	0.25 m³
Config. file no:	98819250
Country of origin:	HU
Custom tariff no.:	84137065

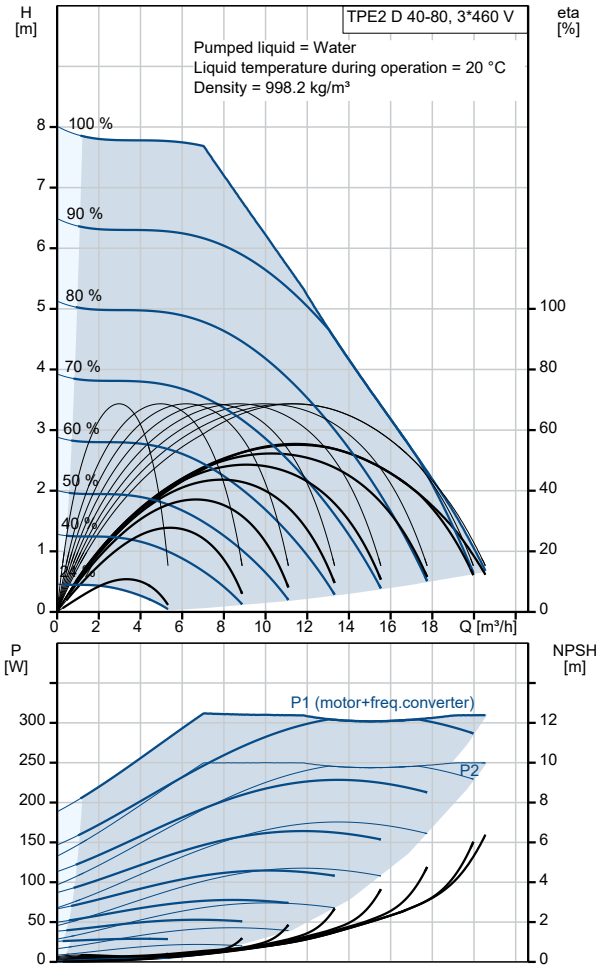

98417139 TPE2 D 40-80 N-A-F-A-BQQE-CDB

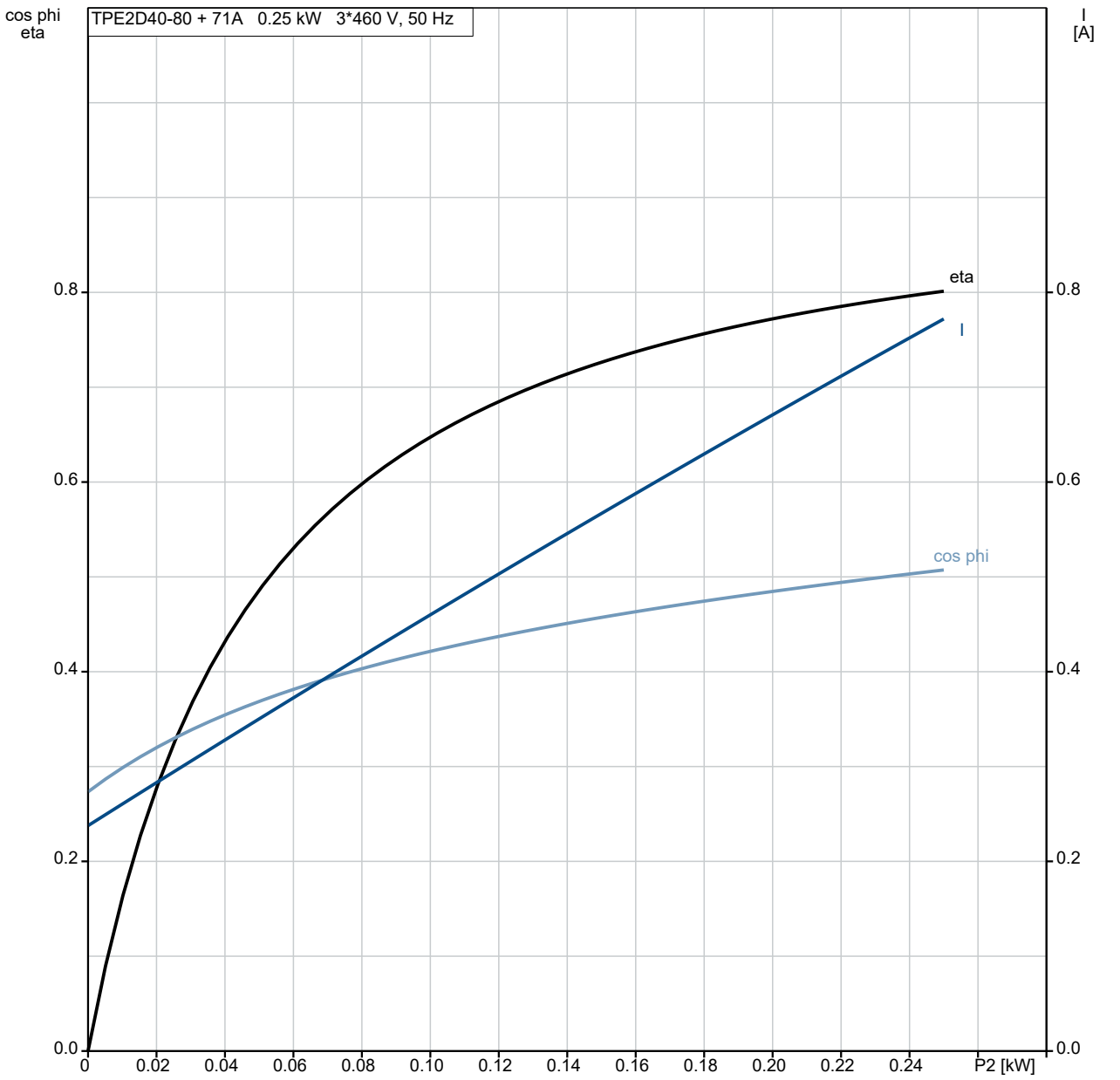

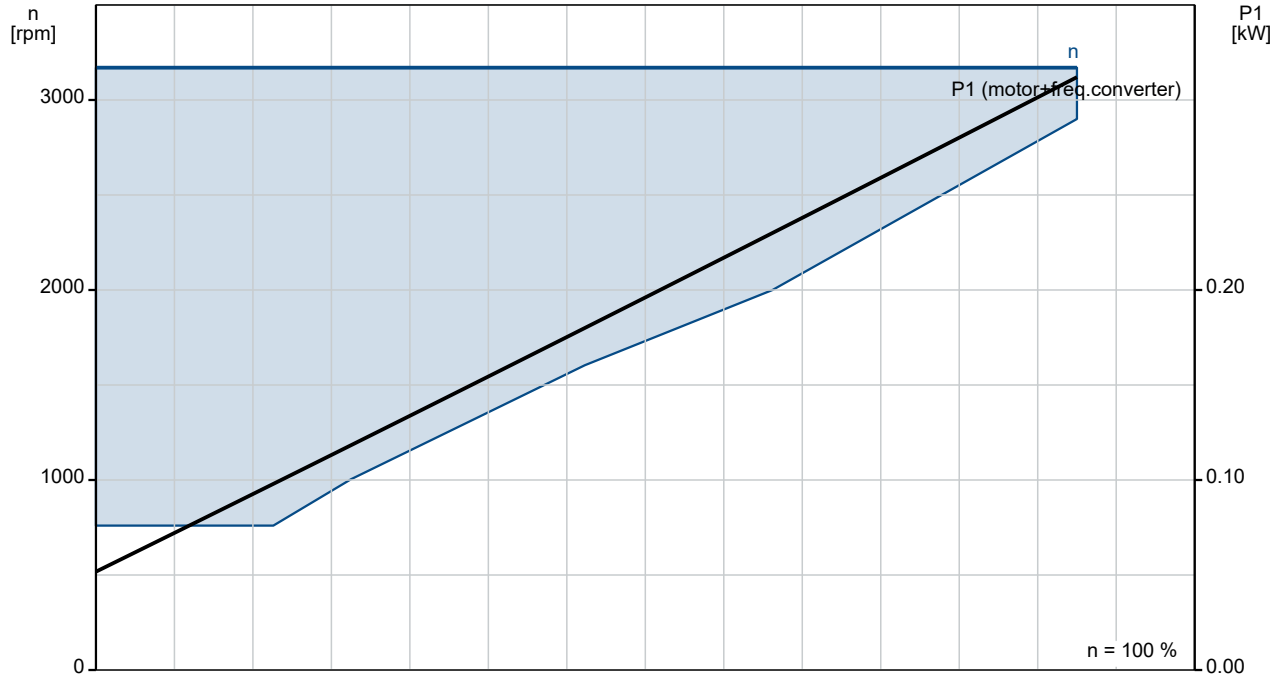

98417139 TPE2 D 40-80 N-A-F-A-BQQE-CDB

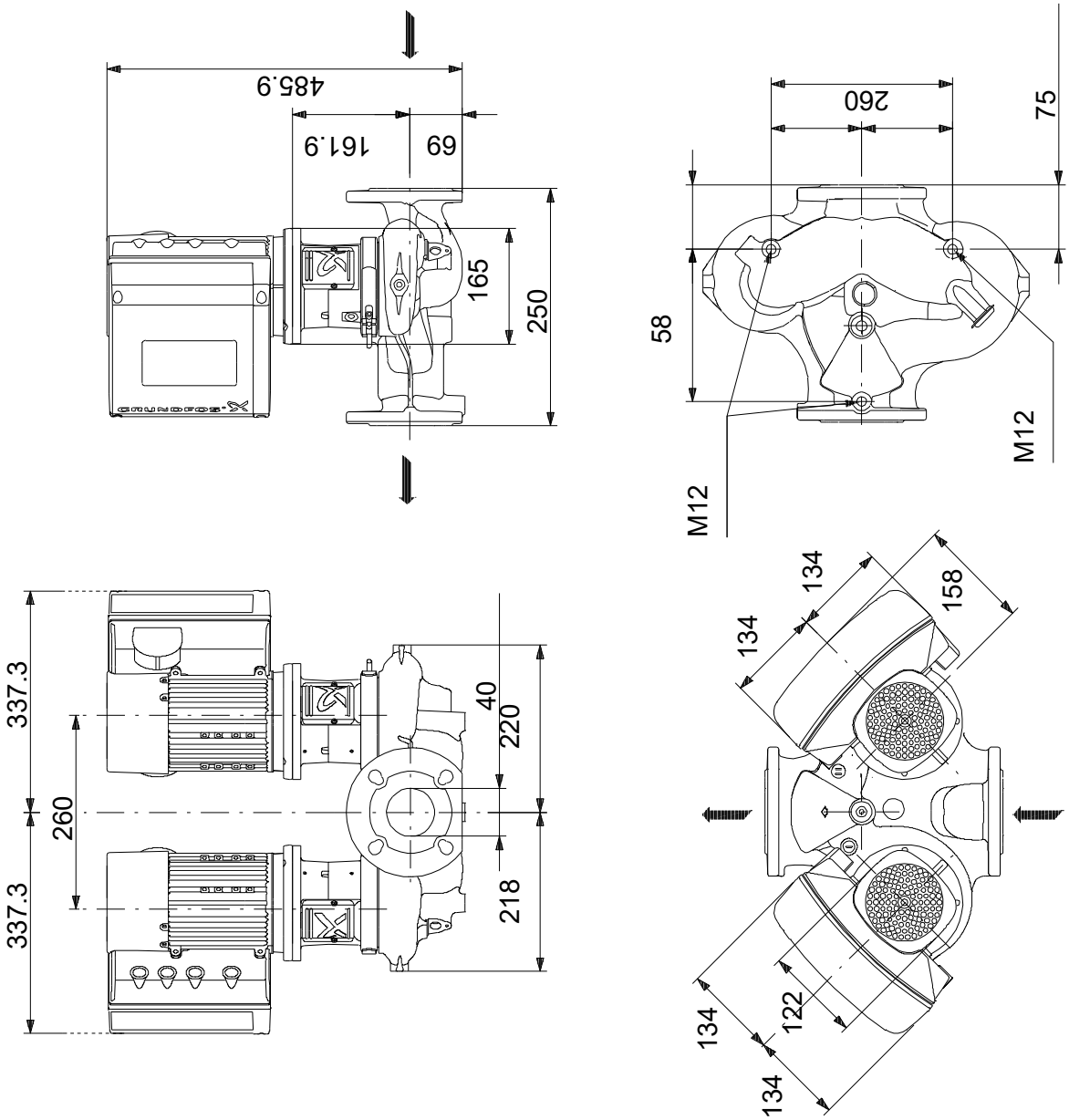

Note! All units are in [mm] unless others are stated.
Disclaimer: This simplified dimensional drawing does not show all details.

Spare parts TPE2 D 40-80, Product No. 98417139
Produced After 1804 (production year and week number)

Pos	Omschrijving	Opmerking tekst	Classificatie Gegevens	Onderdeelnr.	Aantal	Eenheid
-	Kit, clamp			98660114	2	pcs
92	Clamp cpl.				1	
-	Kit, impeller			98660095	2	pcs
11b	Key				1	
45	Neck ring cpl.				1	
- 49	Impeller cpl.				1	
	Impeller cpl.					1
66a	Wedge lock washer				1	
67	Lock nut		Thread: M8		1	
-	Kit, pump shaft			99131304	2	pcs
9	Socket set screw				3	
51	Shaft				1	
-	Kit, shaft seal BQQE			98660103	2	pcs
105	Shaft seal				1	
301a	O-ring				1	
-	Kit, valve flap			98660109	1	pcs
18	Pipe plug				2	
215	Guide pin				1	
217	Valve flap				1	
-	Pump housing cpl.			98660071	1	pcs
18	Pipe plug			96547615	2	
45	Neck ring cpl.			98962025	2	
-	Motor				2	pcs
-	Kit, adapter			98345796	1	
- 252a	Adapter set					1
	Adapter					
	Adapter					
167	Cable gland					
-	Kit, bearing cpl.			98330604	1	
111	Ball bearing		Designation: 6304.2Z.C3.SYN			1
111	Ball bearing		Designation: 6204.2Z.C3.SYN			1
156d	Gasket		Internal diameter: 114,80			1
			Outer diameter: 121,20			
			Thickness: 0,25			
156c	Seal ring					2
158a	O-ring		Diameter: 47			1
			Material type: NBR			
			Thickness: 3			
158	Waved washer					1
-	Kit, Blanking plug			98334761	1	
252b	Plug cpl.					4
-	Kit, cable gland			98337336	1	
- 293	Cable glands set			98271484		1
167	Cable gland					
167	Cable gland					
-	Kit, connector plugs			98403113	1	
266	Connector plug 10-pole					1
266	Connector plug 2-pole					1
266	Connector plug 8-pole					1
266	Connector plug 8-pole					1
266	Connector plug 8-pole					1
266	Connector plug 3-pole					1

Pos	Omschrijving	Opmerking tekst	Classificatie Gegevens	Onderdeelnr.	Aantal	Eenheid
266	Connector plug 3-pole					1
266	Connector plug 3-pole					1
-	Kit, control box			98406658	1	
152	Pan head thread forming screw					1
166	Torx Screw					2
178	Pan head thread forming screw					4
251d	Pan head thread forming screw					4
251b	Control box					1
251a	Control box					1
252b	Plug cpl.					4
266	Connector plug 8-pole					1
266	Connector plug 3-pole					1
268a	Base					1
268	Pan head screw					1
273b	Battery					1
273	Funct. Module cpl.					1
275a	Pin					1
277a	Cross recess Pan head screw					1
277a	Cross recess Pan head screw					1
277a	Cross recess Pan head screw					5
277	Isolation cover					1
286	Spacer					1
286	Spacer					1
287	Cover					1
288b	Retaining ring					6
288a	Pan head thread forming screw					6
288	Wire clamp					3
289	Wire clamp					1
290	Control panel, cpl.					1
-	Kit, Control box upper			98334765	1	
251d	Pan head thread forming screw					4
251b	Control box					1
-	Kit, Control panel			98939973	1	
290	Control panel, cpl.					1
-	Kit, cover			98330622	1	
287	Cover					1
-	Kit, fan			98290123	1	
152	Pan head thread forming screw					4
156c	Seal ring					1
156	Fan					1
-	Kit, flange (DE)			99177640	1	
156d	Gasket		Internal diameter: 114,80			1
			Outer diameter: 121,20			
			Thickness: 0,25			
156b	Flange					1
185	Cross recess Pan head screw					4
201c	Drain plug					3
-	Kit, Funct. module			98334777	1	

Pos	Omschrijving	Opmerking tekst	Classificatie Gegevens	Onderdeelnr.	Aantal	Eenheid
273a	Cross recess Pan head screw				5	
273	Funct. Module cpl.				1	
275a	Pin				1	
286	Spacer				1	
-	Kit, Isolation cover			98330625	1	
277a	Cross recess Pan head screw				1	
277	Isolation cover				1	
-	Kit, Lower part cpl.			98330618	1	
178	Pan head thread forming screw				4	
251a	Control box				1	
275a	Pin				1	
277a	Cross recess Pan head screw				1	
277	Isolation cover				1	
-	Kit, motor			99259917	1	
	Terminal				3	
47d	Lock ring				1	
111	Ball bearing		Designation: 6304.2Z.C3.SYN		1	
150	Stator				1	
150	Stator housing				1	
151	Fan cover				1	
152	Pan head thread forming screw				4	
153	Ball bearing		Designation: 6204.2Z.C3.SYN		1	
156d	Gasket		Internal diameter: 114,80		1	
			Outer diameter: 121,20			
			Thickness: 0,25			
156c	Seal ring				1	
156c	Seal ring				1	
156b	Flange				1	
156	Fan				1	
157	O-ring		Diameter: 47		1	
			Material type: NBR			
			Thickness: 3			
158	Waved washer				1	
158	Retaining ring				1	
171	Parallel key				1	
172	Shaft w/rotor				1	
178	Pan head thread forming screw				4	
185	Cross recess Pan head screw				4	
186	Drain plug				1	
203	Terminal plug				1	
289a	Pan head thread forming screw				1	
-	Kit, plug			99369622	1	
	Terminal				3	
203	Terminal plug				1	
205	Pan head thread forming screw				1	
-	Kit, screws			98330627	1	
268a	Base				1	
268	Pan head screw				1	
288b	Retaining ring				6	
288a	Pan head thread forming screw				6	
288	Wire clamp				3	

Pos	Omschrijving	Opmerking tekst	Classificatie Gegevens	Onderdeelnr.	Aantal	Eenheid
289a	Pan head thread forming screw				1	
289	Wire clamp				1	
	Pan head thread forming screw			99598708	4	
111	Ball bearing		Designation: 6204.2Z.C3.SYN	97914979	1	
152	Pan head thread forming screw			99834207	1	
152	Pan head thread forming screw			99814578	1	
153	Ball bearing		Designation: 6304.2Z.C3.SYN	99211147	1	
156d	Gasket		Internal diameter: 114,80	99406425	1	
			Outer diameter: 121,20			
			Thickness: 0,25			
158	Retaining ring			96586427	1	
186	Drain plug			99980519	3	
251d	Pan head thread forming screw			98995460	4	
266	Connector plug 3-pole			99421265	1	
7a	Pan head screw			96536492	2	pcs
18	Plug			96620482	1	pcs
18	Plug			98164277	1	pcs
28	Hex head cap screw		Length (mm): 25	99925951	4	pcs
			Thread: UNC 3/8"			
66a	Wedge lock washer			96536157	1	pcs
66a	Wedge lock washer			92575609	1	pcs
67	Lock nut		Thread: M8	98277008	1	pcs
77	Motor stool			98660053	1	pcs
100	Spacer ring			99566635	2	pcs