Inventflow: Grundfos A-partner

Grundfos TP 32-60/2 A-F-Z-BQQE-CX1

Find the pump here:
https://inventflow.nl/en/pompenfilter/tp/grundfos-tp-32-60-2-a-f-z-bqqe-cx1

Contact

info@inventflow.nl
+31 (0) 546 45 80 72

Datasheet

Qty.	Description
1	**TP 32-60/2 A-F-Z-BQQE-CX1**

Note! Product picture may differ from actual product

Product No.: 98436290

Single-stage centrifugal volute in-line single-head pump:
- neck rings and impeller made of stainless steel
- cataphoresis treatment
- shell coupling
- top-pull-out principle for easy maintenance
- optimized hydraulics
- in-line design with opposite suction and discharge ports enabling mounting in pipework or on a concrete foundation
- corrosion resistant maintenance-free mechanical shaft seal.

Phase:	The motor is a 3-phase AC motor.
Controls:	
Frequency converter:	NONE
Liquid:	
Pumped liquid:	Water
Liquid temperature range:	-25 .. 120 °C
Selected liquid temperature:	20 °C
Density:	998.2 kg/m³
Technical:	
Pump speed on which pump data are based:	2890 rpm
Rated flow:	7.5 m³/h
Rated head:	3.6 m
Actual impeller diameter:	64 mm
Code for shaft seal:	BQQE
Curve tolerance:	ISO9906:2012 3B2
Materials:	
Pump housing:	Bronze CuSn10 ASTM B505
Impeller:	Stainless steel EN 1.4301 AISI 304
Installation:	
Range of ambient temperature:	-20 .. 40 °C
Maximum operating pressure:	10 bar
Max pressure at stated temp:	10 bar / 120 °C
Type of connection:	DIN
Size of connection:	DN 32

Qty.	Description
	Pressure rating for connection: PN 6/10 Port-to-port length: 220 mm Flange size for motor: FT75 Electrical data: Motor type: SIEMENS IE Efficiency class: IE1 Rated power - P2: 0.25 kW Mains frequency: 50 Hz Rated voltage: 3 x 220-240D/380-415Y V Rated current: 1.63/0.94 A Cos phi - power factor: 0.66 Rated speed: 2800-2850 rpm Efficiency: IE1 58,2% Motor efficiency at full load: 58.2-58.2 % Number of poles: 2 Enclosure class (IEC 34-5): IP55 Insulation class (IEC 85): F Motor No: 81602314 Others: Minimum efficiency index, MEI ≥: 0.56 Net weight: 18.1 kg Gross weight: 21.6 kg Shipping volume: 0.08 m³ Danish VVS No.: 38 1881.060 Country of origin: HU Custom tariff no.: 84137051

98436290 TP 32-60/2 A-F-Z-BQQE-CX1 50 Hz

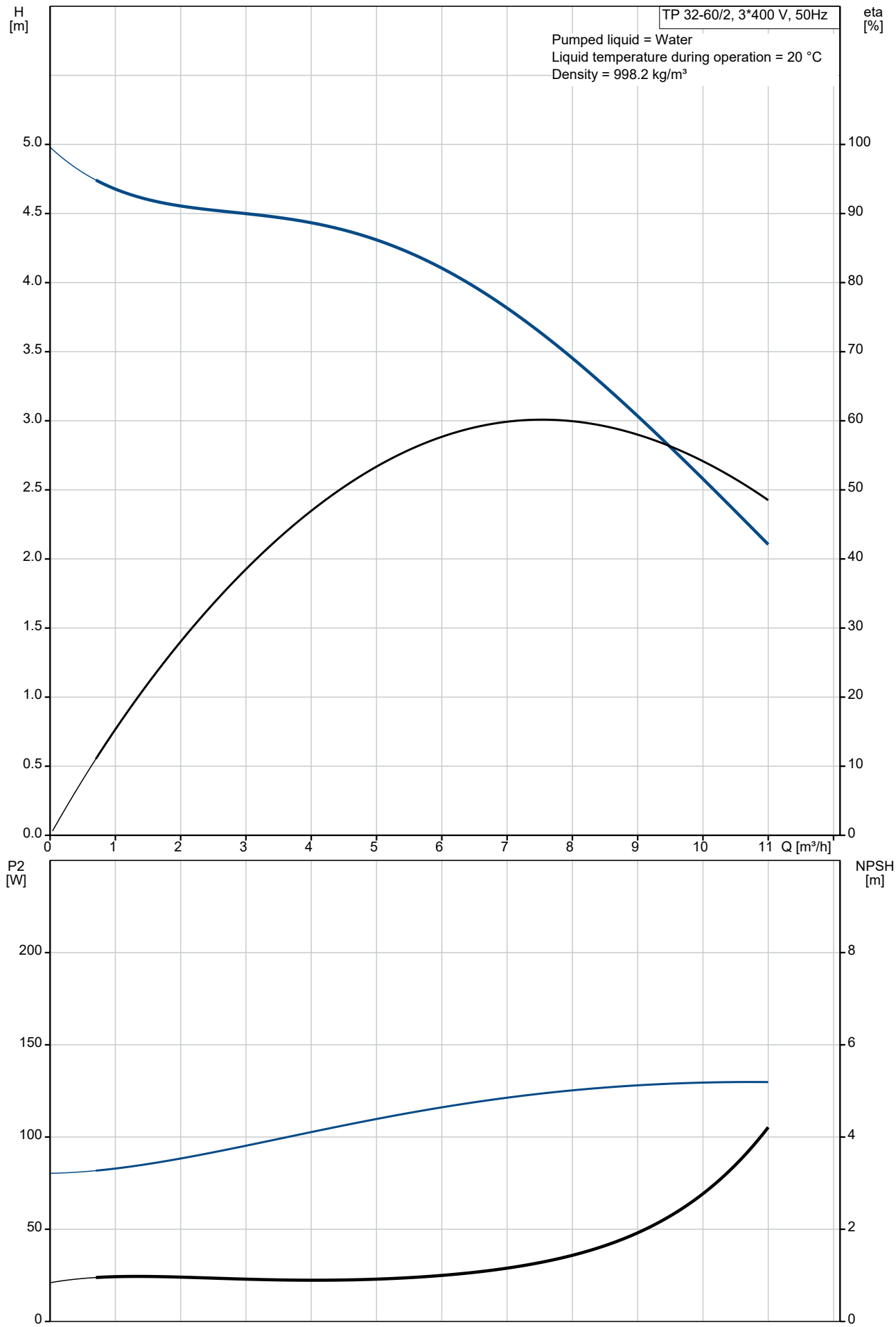

Description	Value
General information:	
Product name:	TP 32-60/2 A-F-Z-BQQE-CX1
Product No:	98436290
EAN number:	5711494972845
Technical:	
Pump speed on which pump data are based:	2890 rpm
Rated flow:	7.5 m³/h
Rated head:	3.6 m
Maximum head:	60 dm
Actual impeller diameter:	64 mm
Code for shaft seal:	BQQE
Curve tolerance:	ISO9906:2012 3B2
Pump version:	A
Materials:	
Pump housing:	Bronze
Pump housing:	CuSn10
Pump housing:	ASTM B505
Impeller:	Stainless steel
Impeller:	EN 1.4301
Impeller:	AISI 304
Material code:	Z
Installation:	
Range of ambient temperature:	-20 .. 40 °C
Maximum operating pressure:	10 bar
Max pressure at stated temp:	10 bar / 120 °C
Type of connection:	DIN
Size of connection:	DN 32
Pressure rating for connection:	PN 6/10
Port-to-port length:	220 mm
Flange size for motor:	FT75
Connect code:	F
Liquid:	
Pumped liquid:	Water
Liquid temperature range:	-25 .. 120 °C
Selected liquid temperature:	20 °C
Density:	998.2 kg/m³
Electrical data:	
Motor type:	SIEMENS
IE Efficiency class:	IE1
Rated power - P2:	0.25 kW
Mains frequency:	50 Hz
Rated voltage:	3 x 220-240D/380-415Y V
Rated current:	1.63/0.94 A
Cos phi - power factor:	0.66
Rated speed:	2800-2850 rpm
Efficiency:	IE1 58,2%
Motor efficiency at full load:	58.2-58.2 %
Number of poles:	2
Enclosure class (IEC 34-5):	IP55
Insulation class (IEC 85):	F
Motor protec:	NONE
Motor No:	81602314
Controls:	
Frequency converter:	NONE
Others:	
Minimum efficiency index, MEI ≥:	0.56
Net weight:	18.1 kg
Gross weight:	21.6 kg
Shipping volume:	0.08 m³
Danish VVS No.:	38 1881.060
Country of origin:	HU
Custom tariff no.:	84137051

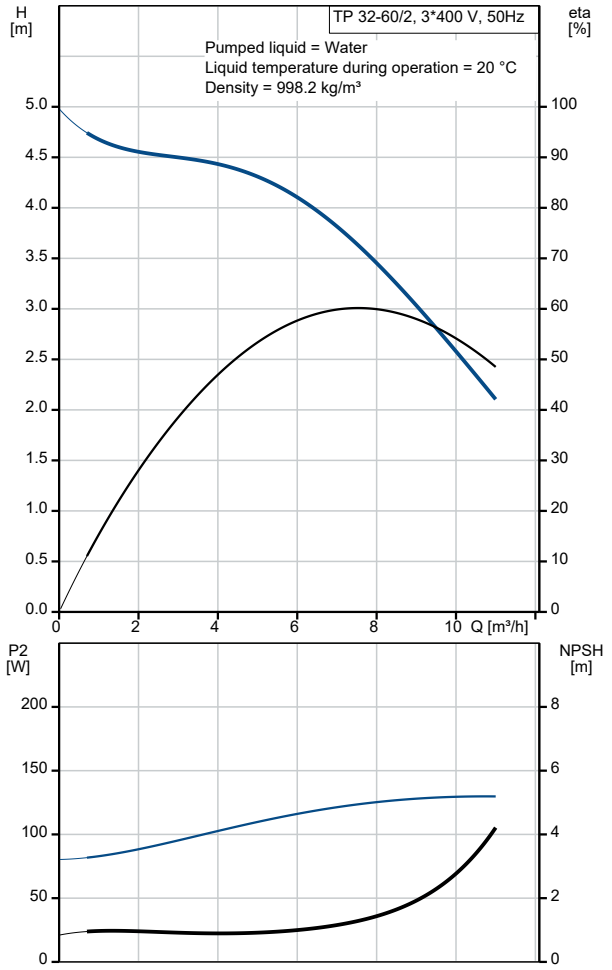

98436290 TP 32-60/2 A-F-Z-BQQE-CX1 50 Hz

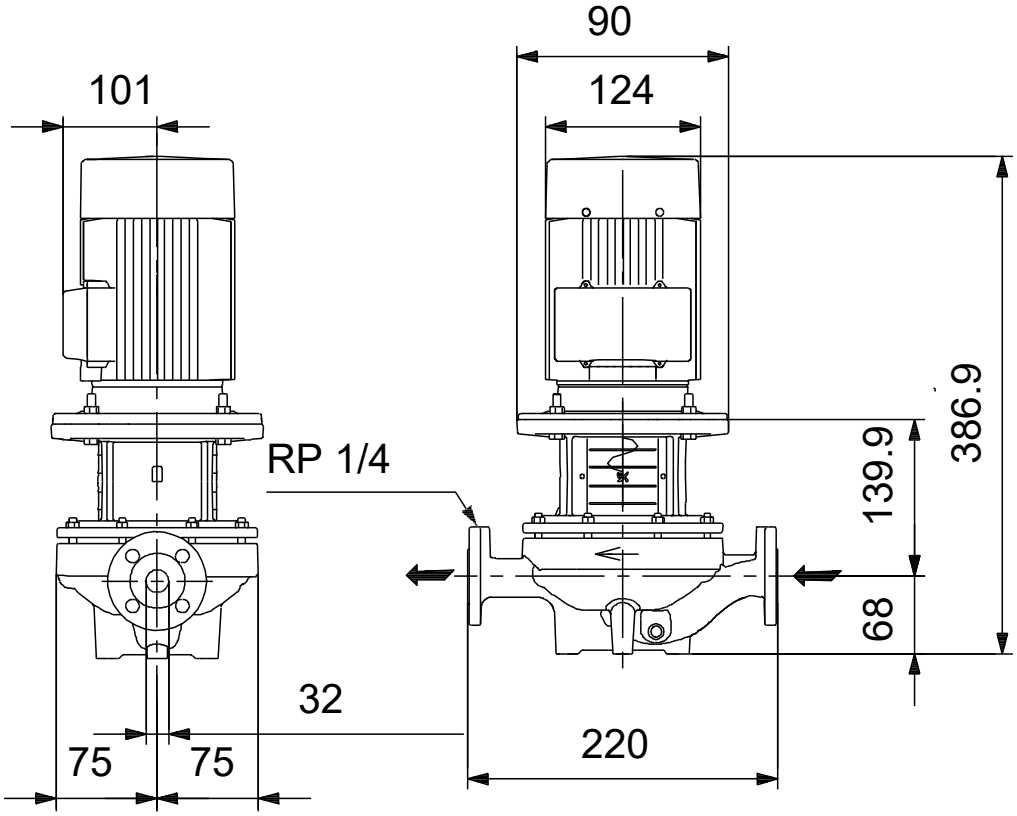

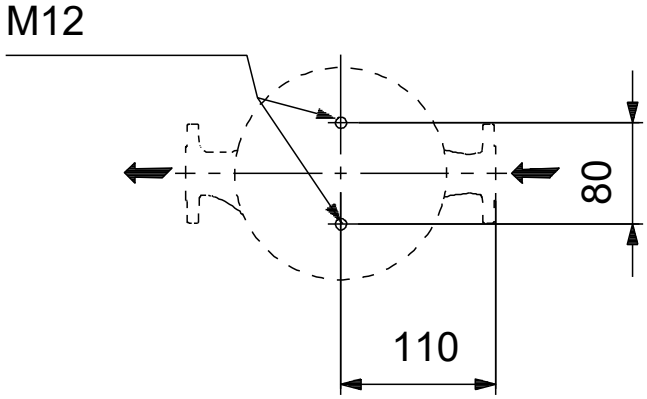

Note! All units are in [mm] unless others are stated.
Disclaimer: This simplified dimensional drawing does not show all details.

Spare parts TP 32-60/2, Product No. 98436290
Produced After 1026 (production year and week number)

Pos	Omschrijving	Opmerking tekst	Classificatie Gegevens	Onderdeelnr.	Aantal	Eenheid
-	Kit, coupling			00495081	1	pcs
9	Hex socket head cap screw		Designation: DIN 912		4	
			Length (mm): 20			
			Thread: M6			
10a	Coupling half				2	
10	Shaft pin		Diameter: 5		1	
			Length (mm): 21,5			
-	Kit, shaft seal BQQE			96488632	1	pcs
72a	O-ring				1	
105	Shaft seal				1	
+	Pump housing cpl.			98313142	1	pcs
-	Motor stool cpl.			98313301	1	pcs
28	Hex head screw		Length (mm): 25	99335941	4	
			Thread: M8			
	Motor			99759453	1	pcs
7a	Pan head screw			96536492	4	pcs
7	Coupling guard			96591354	2	pcs
18	Plug			96620482	1	pcs
18	Plug			98164277	1	pcs
19	Pipe plug		Thread: R 1/4	98163051	2	pcs
48	Split cone nut			96547614	1	pcs
49b	Split cone			96547797	1	pcs
49	Impeller cpl.			96547683	1	pcs
72a	O-ring			98163016	1	pcs