Inventflow: Grundfos A-partner

Grundfos TP 125-190/4 A-F-A-BQQE-NX3

Find the pump here:
https://inventflow.nl/en/pompenfilter/tp/grundfos-tp-125-190-4-a-f-a-bqqe-nx3

Contact

info@inventflow.nl
+31 (0) 546 45 80 72

Datasheet

Qty.	Description
1	**TP 125-190/4 A-F-A-BQQE-NX3**

Note! Product picture may differ from actual product

Product No.: 98743727

Single-stage centrifugal volute in-line single-head pump:
- wear rings made of bronze
- cataphoresis treatment
- stable sleeve coupling
- top-pull-out principle for easy maintenance
- optimized hydraulics
- in-line design with opposite suction and discharge ports enabling mounting in pipework or on a concrete foundation
- corrosion resistant maintenance-free mechanical shaft seal.

Phase:	The motor is a 3-phase AC motor.
Controls:	
Frequency converter:	NONE
Liquid:	
Pumped liquid:	Water
Liquid temperature range:	-25 .. 120 °C
Selected liquid temperature:	20 °C
Density:	998.2 kg/m³
Technical:	
Pump speed on which pump data are based:	1470 rpm
Rated flow:	169 m³/h
Rated head:	16.6 m
Actual impeller diameter:	240 mm
Code for shaft seal:	BQQE
Curve tolerance:	ISO9906:2012 3B
Materials:	
Pump housing:	Cast iron EN-GJL-250 ASTM class 35
Impeller:	Cast iron EN-GJL-200 ASTM class 30
Installation:	
Range of ambient temperature:	-20 .. 55 °C
Maximum operating pressure:	16 bar
Max pressure at stated temp:	16 bar / 120 °C
Type of connection:	DIN

Qty.	Description	
	Size of connection:	DN 125
	Pressure rating for connection:	PN 16
	Port-to-port length:	800 mm
	Flange size for motor:	FF300
	Electrical data:	
	Motor type:	SIEMENS
	IE Efficiency class:	IE3
	Rated power - P2:	11 kW
	Mains frequency:	50 Hz
	Rated voltage:	3 x 380-420D/660-725Y V
	Rated current:	21,53-19,5/12,4-11,2 A
	Starting current:	680-680 %
	Cos phi - power factor:	0.84
	Rated speed:	1475 rpm
	Efficiency:	IE3 91,4%
	Motor efficiency at full load:	91.4-91.4 %
	Motor efficiency at 3/4 load:	91.9-91.9 %
	Motor efficiency at 1/2 load:	91.4-91.4 %
	Number of poles:	4
	Enclosure class (IEC 34-5):	IP55
	Insulation class (IEC 85):	F
	Motor No:	99032129
	Others:	
	Minimum efficiency index, MEI ≥:	0.70
	Net weight:	259 kg
	Gross weight:	320 kg
	Shipping volume:	0.94 m³
	Danish VVS No.:	381717190
	Finnish LVI No.:	4616142
	Country of origin:	HU
	Custom tariff no.:	84137051

98743727 TP 125-190/4 A-F-A-BQQE-NX3 50 Hz

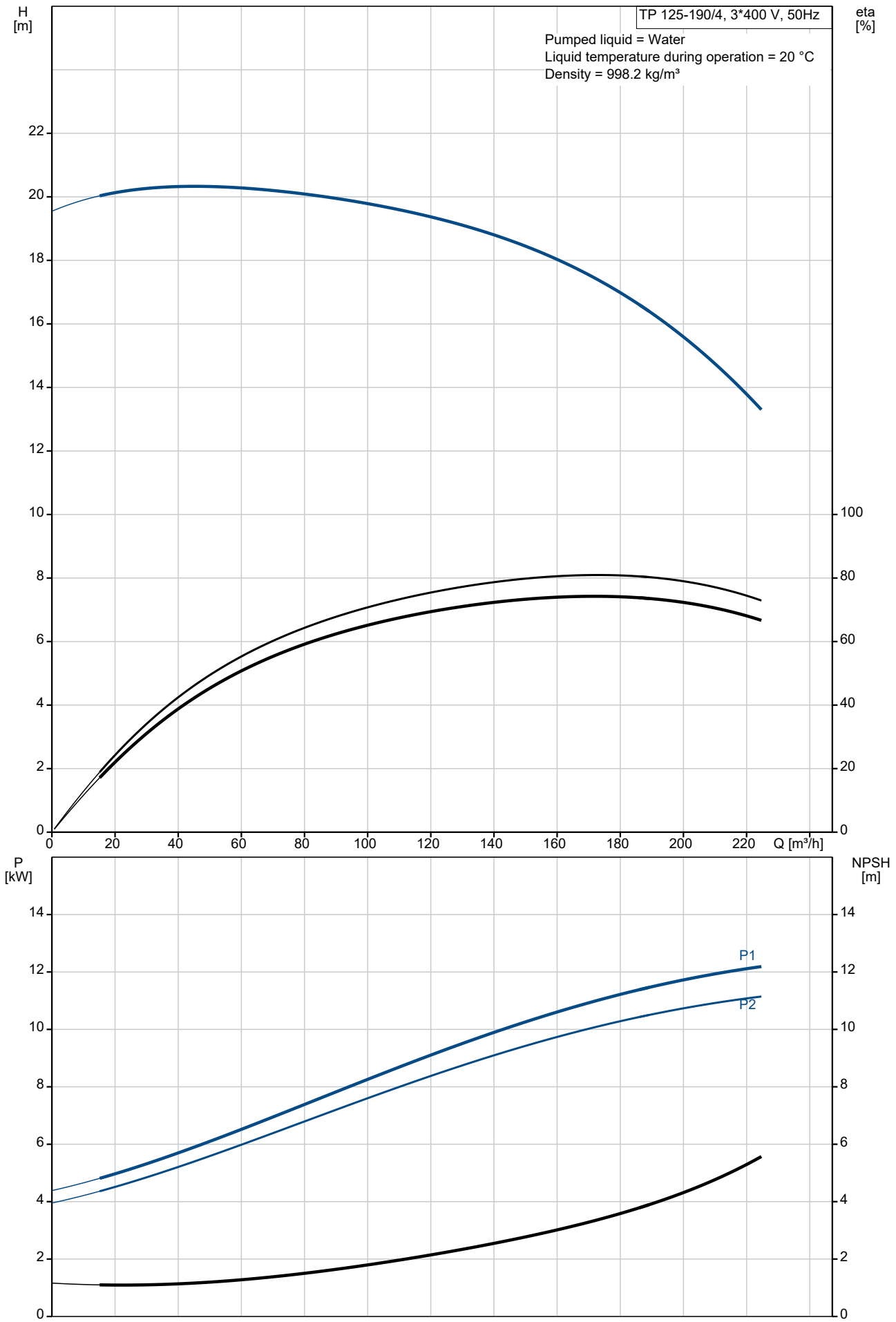

Description	Value
General information:	
Product name:	TP 125-190/4 A-F-A-BQQE-NX3
Product No:	98743727
EAN number:	5712600824485
Technical:	
Pump speed on which pump data are based:	1470 rpm
Rated flow:	169 m³/h
Rated head:	16.6 m
Maximum head:	190 dm
Actual impeller diameter:	240 mm
Code for shaft seal:	BQQE
Curve tolerance:	ISO9906:2012 3B
Pump version:	A
Materials:	
Pump housing:	Cast iron
Pump housing:	EN-GJL-250
Pump housing:	ASTM class 35
Impeller:	Cast iron
Impeller:	EN-GJL-200
Impeller:	ASTM class 30
Material code:	A
Installation:	
Range of ambient temperature:	-20 .. 55 °C
Maximum operating pressure:	16 bar
Max pressure at stated temp:	16 bar / 120 °C
Type of connection:	DIN
Size of connection:	DN 125
Pressure rating for connection:	PN 16
Port-to-port length:	800 mm
Flange size for motor:	FF300
Connect code:	F
Liquid:	
Pumped liquid:	Water
Liquid temperature range:	-25 .. 120 °C
Selected liquid temperature:	20 °C
Density:	998.2 kg/m³
Electrical data:	
Motor type:	SIEMENS
IE Efficiency class:	IE3
Rated power - P2:	11 kW
Mains frequency:	50 Hz
Rated voltage:	3 x 380-420D/660-725Y V
Rated current:	21,53-19,5/12,4-11,2 A
Starting current:	680-680 %
Cos phi - power factor:	0.84
Rated speed:	1475 rpm
Efficiency:	IE3 91,4%
Motor efficiency at full load:	91.4-91.4 %
Motor efficiency at 3/4 load:	91.9-91.9 %
Motor efficiency at 1/2 load:	91.4-91.4 %
Number of poles:	4
Enclosure class (IEC 34-5):	IP55
Insulation class (IEC 85):	F
Motor protec:	PTC
Motor No:	99032129
Controls:	
Frequency converter:	NONE
Others:	
Minimum efficiency index, MEI ≥:	0.70
Net weight:	259 kg
Gross weight:	320 kg
Shipping volume:	0.94 m³

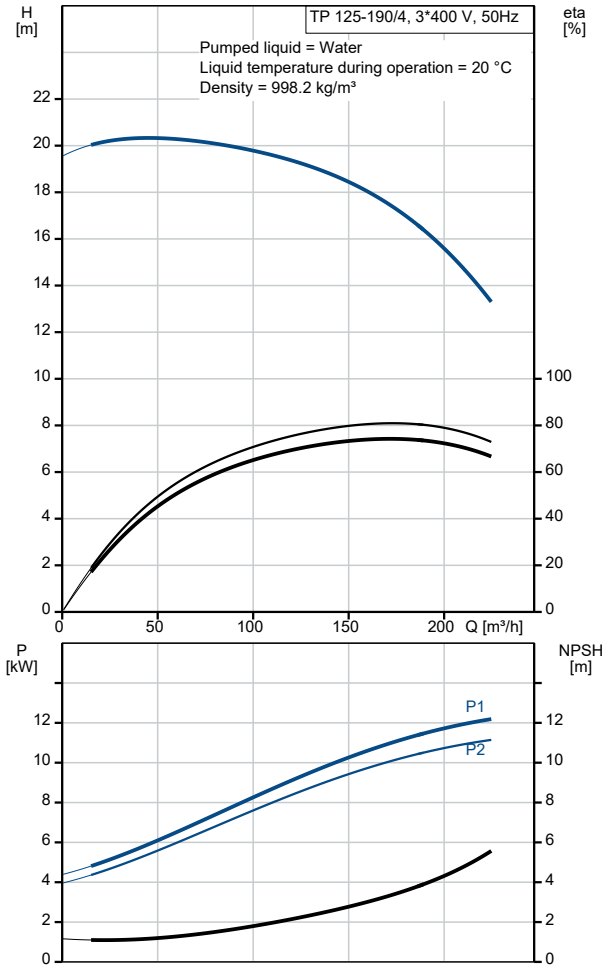

Description	Value
Danish VVS No.:	381717190
Finnish LVI No.:	4616142
Country of origin:	HU
Custom tariff no.:	84137051

98743727 TP 125-190/4 A-F-A-BQQE-NX3 50 Hz

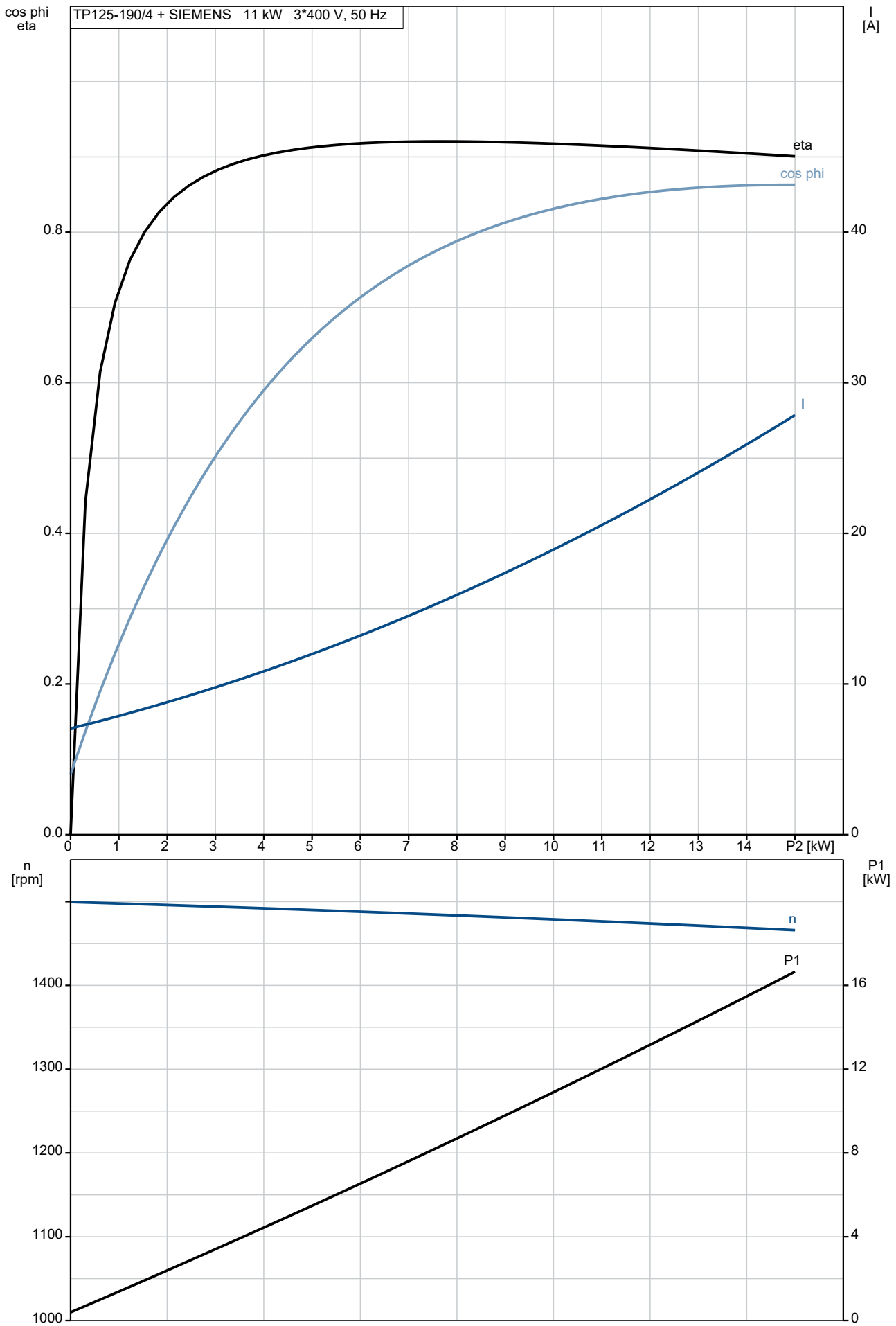

98743727 TP 125-190/4 A-F-A-BQQE-NX3 50 Hz

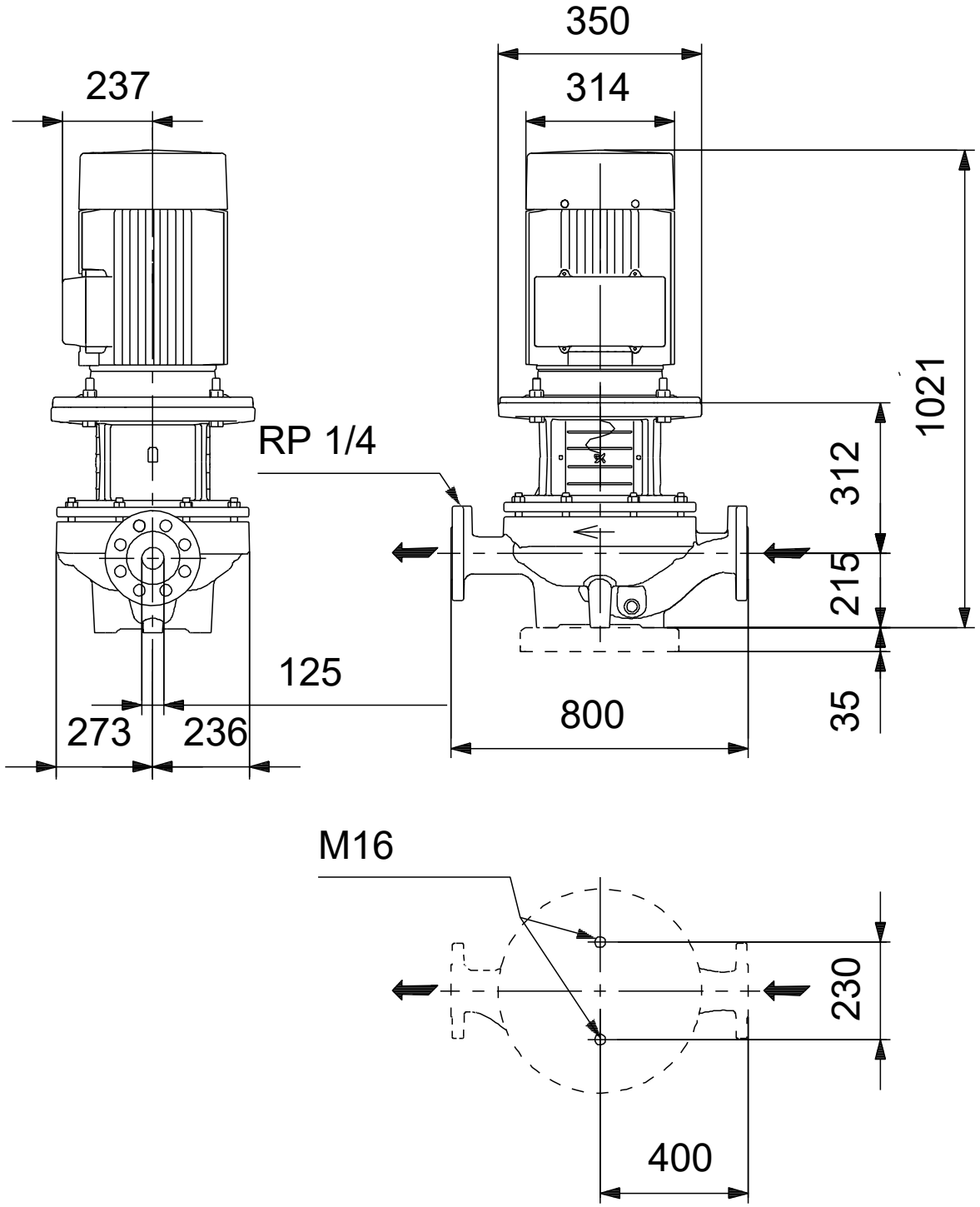

Note! All units are in [mm] unless others are stated.
Disclaimer: This simplified dimensional drawing does not show all details.

Spare parts TP 125-190/4, Product No. 98743727
Produced After 2105 (production year and week number)

	Pos	Omschrijving	Opmerking tekst	Classificatie Gegevens	Onderdeelnr.	Aantal	Eenheid
-	56	Base plate			96536246	1	pcs
	28g	Hex head cap screw		Length (mm): 30 MM		2	
				Thread: M16			
	56	Base plate				1	
-		Motor				1	pcs
	156	Spare, motor fan			98507837	1	
	151	Spare, motor fan cover			98507838	1	
	176	Spare, Terminal board			98505488	1	
	164a	Spare, Terminal box			98505713	1	
	18	Plug			96620482	1	pcs
	18	Plug			98164277	1	pcs
	19	Plug			98163028	2	pcs
	36	Nut		Thread: M12	96620479	14	pcs
	49	Impeller			99196000	1	pcs
	56	Base plate			99788464	1	pcs
	67	Nut		Thread: M18	92526535	1	pcs
	72a	O-ring		Diameter: 329,79	92547632	1	pcs
				Material type: EPDM			
				Thickness: 3,53			
	72a	O-ring		Diameter: 329,79	92526511	1	pcs
				Material type: EPDM			
				Thickness: 3,53			
	72a	O-ring		Diameter: 329,79	97511846	1	pcs
				Material type: EPDM			
				Thickness: 3,53			
	72a	O-ring		Diameter: 329,79	97757675	1	pcs
				Material type: EPDM			
				Thickness: 3,53			
	105b	Spacer			96591277	1	pcs
	105	Shaft seal			92514302	1	pcs
	105	Shaft seal			98434906	1	pcs