Inventflow: Grundfos A-partner

Grundfos TP 125-80/4 A-F-A-BQQE-JX3

Find the pump here:
https://inventflow.nl/en/pompenfilter/tp/grundfos-tp-125-80-4-a-f-a-bqqe-jx3

Contact

info@inventflow.nl
+31 (0) 546 45 80 72

Datasheet

Qty.	Description
1	**TP 125-80/4 A-F-A-BQQE-JX3**

Note! Product picture may differ from actual product

Product No.: 98908136

Single-stage, close-coupled, volute pump with in-line suction and discharge ports of identical diameter.
The pump is of the top-pull-out design, i.e. the power head (motor, pump head and impeller) can be removed for maintenance or service while the pump housing remains in the pipework.
The pump is fitted with an unbalanced rubber bellows seal.
The shaft seal is according to EN 12756. Pipework connection is via PN 16 DIN flanges (EN 1092-2 and ISO 7005-2).

The pump is fitted with a fan-cooled asynchronous motor.

Controls:

Frequency converter:	NONE

Liquid:

Pumped liquid:	Water
Liquid temperature range:	-25 .. 120 °C
Selected liquid temperature:	20 °C
Density:	998.2 kg/m³

Technical:

Pump speed on which pump data are based:	1450 rpm
Rated flow:	124 m³/h
Rated head:	6.96 m
Actual impeller diameter:	172 mm
Code for shaft seal:	BQQE
Curve tolerance:	ISO9906:2012 3B2

Materials:

Pump housing:	Cast iron EN-GJL-250 ASTM class 35
Impeller:	Cast iron EN-GJL-200 ASTM class 30

Installation:

Range of ambient temperature:	-20 .. 55 °C
Maximum operating pressure:	16 bar
Max pressure at stated temp:	16 bar / 120 °C
Type of connection:	DIN
Size of connection:	DN 125
Pressure rating for connection:	PN 16
Port-to-port length:	620 mm
Flange size for motor:	FF215

Qty.	Description

Electrical data:

Motor type:	SIEMENS
IE Efficiency class:	IE3
Rated power - P2:	3 kW
Mains frequency:	50 Hz
Rated voltage:	3 x 380-420D/660-725Y V
Rated current:	6,3-5,7/3,57-3,23 A
Starting current:	730-730 %
Cos phi - power factor:	0.83
Rated speed:	1460 rpm
Efficiency:	IE3 87,7%
Motor efficiency at full load:	87.7-87.7 %
Motor efficiency at 3/4 load:	88.4-88.4 %
Motor efficiency at 1/2 load:	88.2-88.2 %
Number of poles:	4
Enclosure class (IEC 34-5):	IP55
Insulation class (IEC 85):	F
Motor No:	83V15210

Others:

Minimum efficiency index, MEI ≥:	0.70
Net weight:	126 kg
Gross weight:	152 kg
Shipping volume:	0.4 m³
Country of origin:	HU
Custom tariff no.:	84137051

98908136 TP 125-80/4 A-F-A-BQQE-JX3 50 Hz

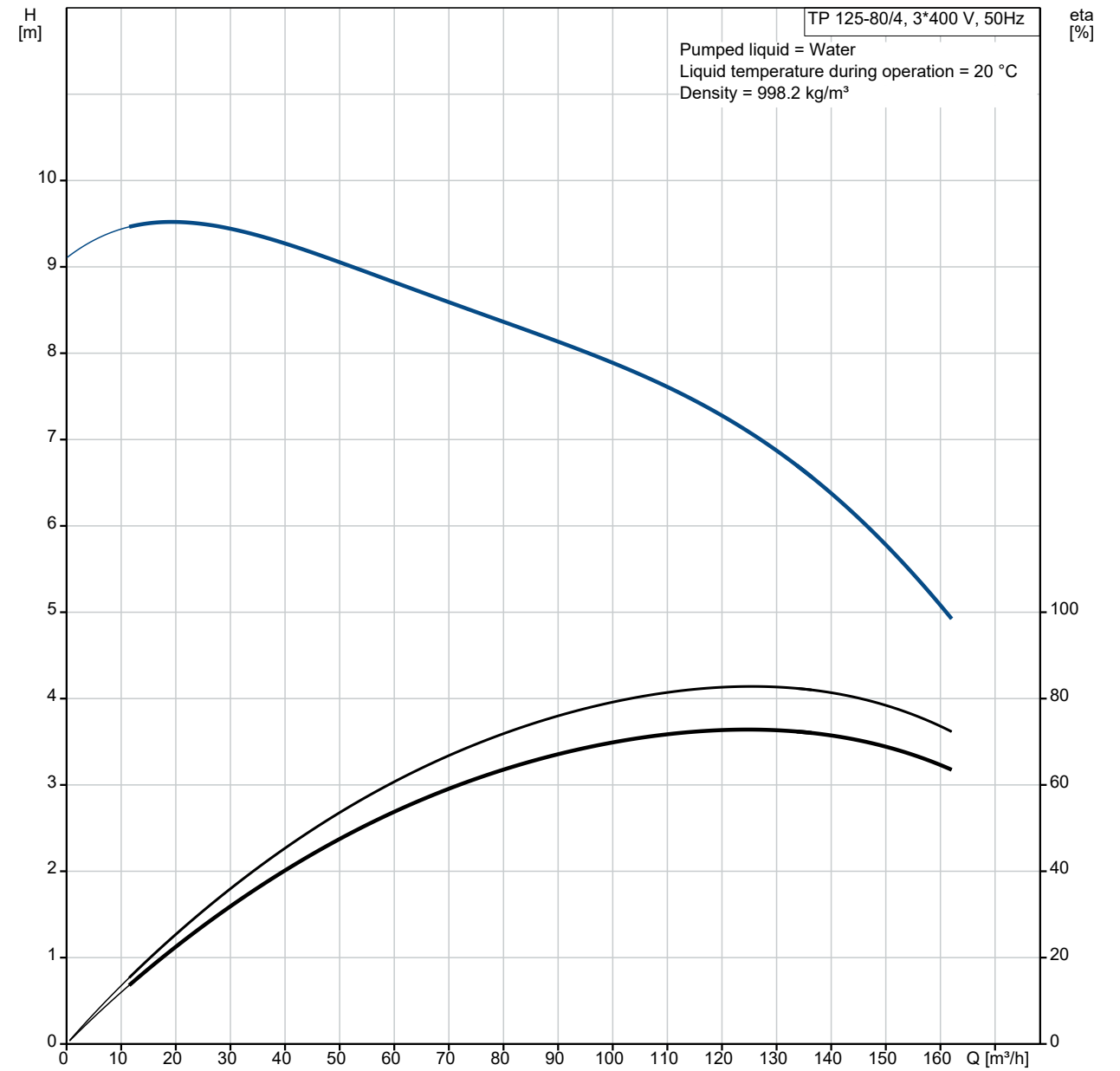

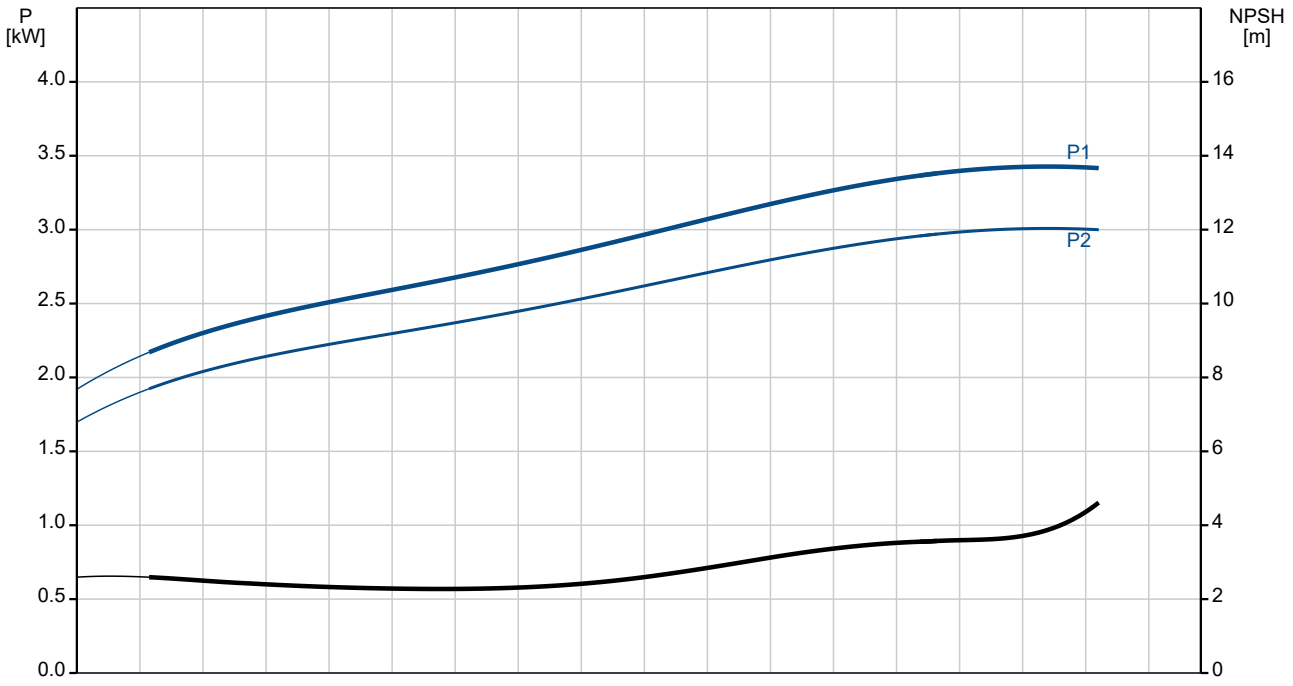

Description	Value
General information:	
Product name:	TP 125-80/4 A-F-A-BQQE-JX3
Product No:	98908136
EAN number:	5712603381114
Technical:	
Pump speed on which pump data are based:	1450 rpm
Rated flow:	124 m³/h
Rated head:	6.96 m
Maximum head:	80 dm
Actual impeller diameter:	172 mm
Code for shaft seal:	BQQE
Curve tolerance:	ISO9906:2012 3B2
Pump version:	A
Materials:	
Pump housing:	Cast iron
Pump housing:	EN-GJL-250
Pump housing:	ASTM class 35
Impeller:	Cast iron
Impeller:	EN-GJL-200
Impeller:	ASTM class 30
Material code:	A
Installation:	
Range of ambient temperature:	-20 .. 55 °C
Maximum operating pressure:	16 bar
Max pressure at stated temp:	16 bar / 120 °C
Type of connection:	DIN
Size of connection:	DN 125
Pressure rating for connection:	PN 16
Port-to-port length:	620 mm
Flange size for motor:	FF215
Connect code:	F
Liquid:	
Pumped liquid:	Water
Liquid temperature range:	-25 .. 120 °C
Selected liquid temperature:	20 °C
Density:	998.2 kg/m³
Electrical data:	
Motor type:	SIEMENS
IE Efficiency class:	IE3
Rated power - P2:	3 kW
Mains frequency:	50 Hz
Rated voltage:	3 x 380-420D/660-725Y V
Rated current:	6,3-5,7/3,57-3,23 A
Starting current:	730-730 %
Cos phi - power factor:	0.83
Rated speed:	1460 rpm
Efficiency:	IE3 87,7%
Motor efficiency at full load:	87.7-87.7 %
Motor efficiency at 3/4 load:	88.4-88.4 %
Motor efficiency at 1/2 load:	88.2-88.2 %
Number of poles:	4
Enclosure class (IEC 34-5):	IP55
Insulation class (IEC 85):	F
Motor protec:	PTC
Motor No:	83V15210
Controls:	
Frequency converter:	NONE
Others:	
Minimum efficiency index, MEI ≥:	0.70
Net weight:	126 kg
Gross weight:	152 kg
Shipping volume:	0.4 m³

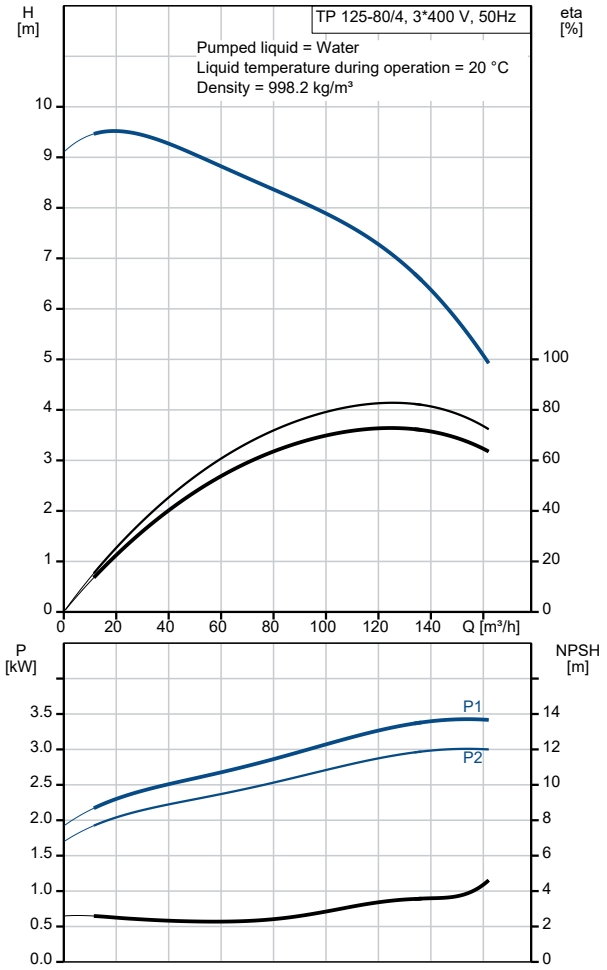

Description	Value
Country of origin:	HU
Custom tariff no.:	84137051

98908136 TP 125-80/4 A-F-A-BQQE-JX3 50 Hz

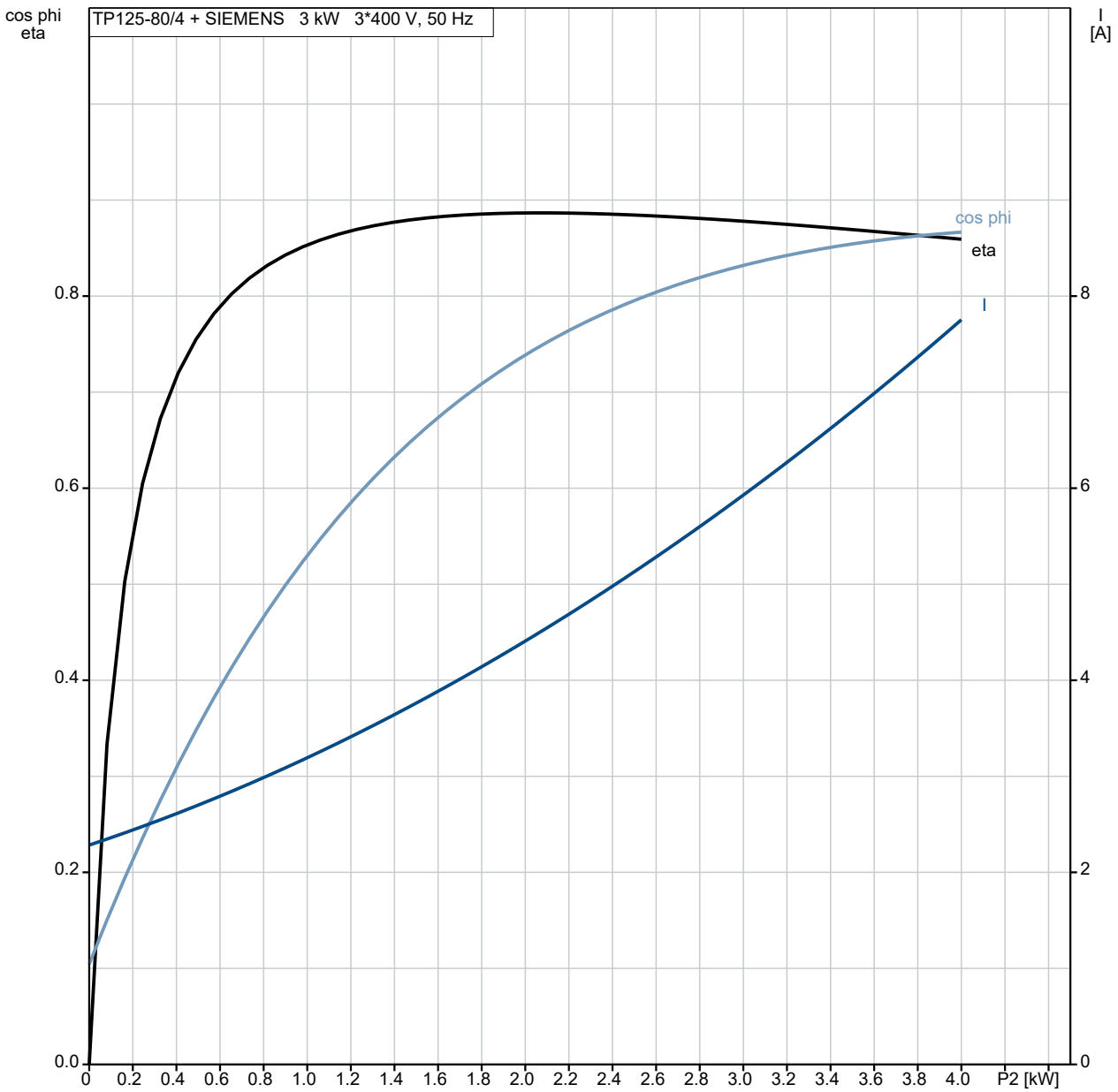

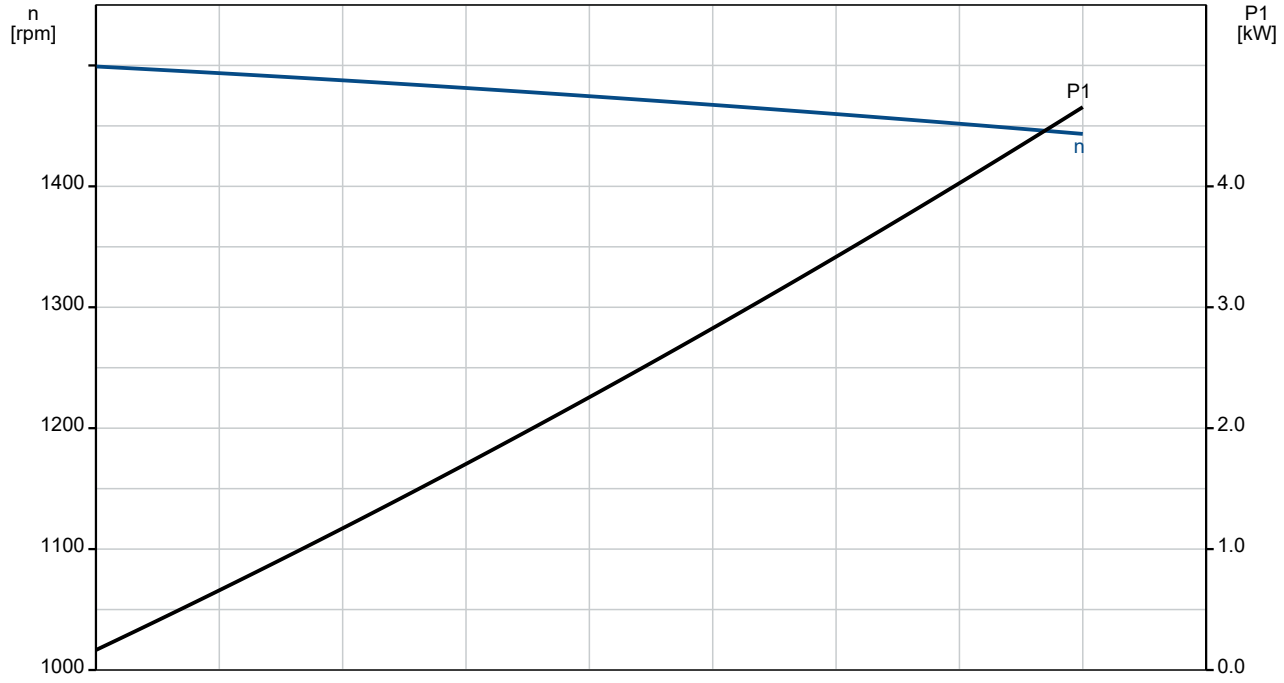

98908136 TP 125-80/4 A-F-A-BQQE-JX3 50 Hz

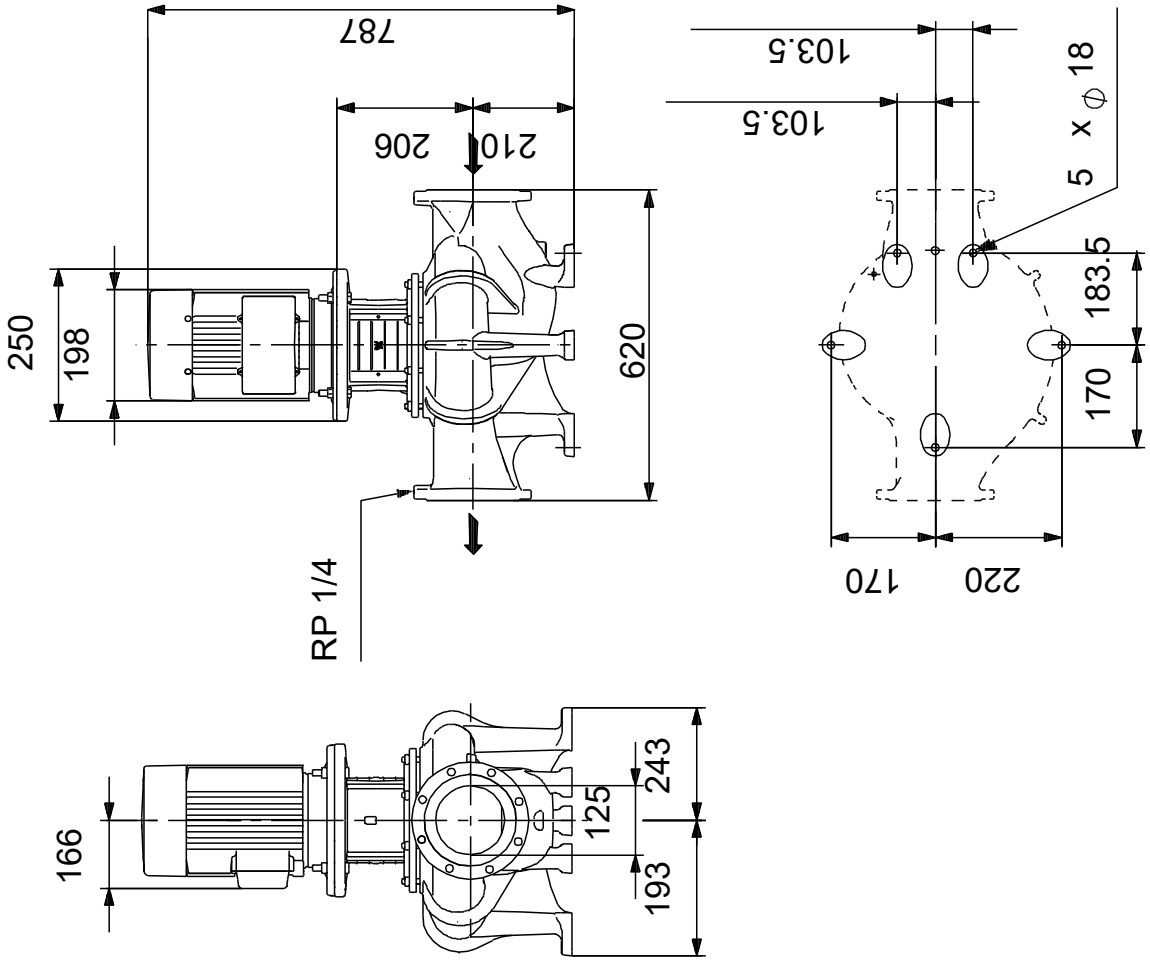

Note! All units are in [mm] unless others are stated.
Disclaimer: This simplified dimensional drawing does not show all details.

Spare parts TP 125-80/4, Product No. 98908136
Produced After 2105 (production year and week number)

Pos	Omschrijving	Opmerking tekst	Classificatie Gegevens	Onderdeelnr.	Aantal	Eenheid
-	Motor				1	pcs
156	Spare, motor fan			98507833	1	
151	Spare, motor fan cover			98505774	1	
176	Spare, Terminal board			98505508	1	
164a	Spare, Terminal box			98505698	1	
18	Plug			96620482	1	pcs
18	Plug			98164277	1	pcs
19	Plug			98163028	2	pcs
36	Nut		Thread: M10	96620484	6	pcs
49	Impeller			99651133	1	pcs
67	Nut		Thread: M14	92526531	1	pcs
72a	O-ring			92547662	1	pcs
72a	O-ring			92526508	1	pcs
72a	O-ring			97511824	1	pcs
72a	O-ring			99756265	1	pcs
77a	Pan head screw			99266550	4	pcs
105	Shaft seal			99380916	1	pcs
105	Shaft seal			99884645	1	pcs