# Inventflow: Grundfos A-partner

## Grundfos NK 150-250/252 EUP A1F1AE-SBQQE

Find the pump here:
https://inventflow.nl/en/pompenfilter/nk/grundfos-nk-150-250-252-eup-a1f1ae-sbqqe

### Contact

info@inventflow.nl
+31 (0) 546 45 80 72

### Datasheet

| Qty. | Description |
|---|---|
| 1 | **NK 150-250/252 EUP A1F1AE-SBQQE** |

**Note! Product picture may differ from actual product**

Product No.: 98971659

Non-self priming, single-stage centrifugal
Flange standard: pump according to EN 1092-2.

The pump is for the pumping of thin, clean or
slightly contaminated
liquids without abrasive or long-fibred
solids.

Phase: Pump and 3-phase AC motor are mounted
as separate units on a common baseplate and

The impeller is hydraulically as well as
dynamically balanced.

The pump has the following characteristics:
- flange dimensions according to
EN 1092-2,

Pump housing: - Cast iron volute
pump housing,
- stainless steel shaft

Impeller: and Cast iron impeller
and bronze wear rings,
- unbalanced mechanical shaft seal
according to EN 12756.

Controls:
Frequency converter: NONE
Pressure sensor: N

Liquid:
Pumped liquid: Water
Liquid temperature range: -25 .. 120 °C
Selected liquid temperature: 20 °C
Density: 998.2 kg/m³

Technical:
Pump speed on which pump data are based: 975 rpm
Rated flow: 267.9 m³/h
Pump with motor: Y
Rated head: 7.274 m
Actual impeller diameter: 252 mm
Nominal impeller diameter: 250
Code for shaft seal: BQQE
Curve tolerance: ISO9906:2012 3B2
Bearing design: Standard

Materials:
Pump housing: Cast iron
EN-GJL-250
ASTM class 35
Wear ring: Brass
Impeller: Cast iron
EN-GJL-200

| Qty. | Description | |
|---|---|---|
| | | ASTM class 30 |
| | Shaft: | Stainless steel |
| | | EN 1.4301 |
| | | AISI 304 |
| | Internal pump house coating: | CED |
| | | |
| | Installation: | |
| | Maximum ambient temperature: | 55 °C |
| | Maximum operating pressure: | 10 bar |
| | Pipe connection standard: | EN 1092-2 |
| | Type of inlet connection: | DIN |
| | Type of outlet connection: | DIN |
| | Size of inlet connection: | DN 200 |
| | Size of outlet connection: | DN 150 |
| | Pressure rating for connection: | PN 10 |
| | Coupling type: | Flexible w/o spacer |
| | Base frame design: | EN/ISO |
| | Grouting: | N |
| | | |
| | Electrical data: | |
| | Motor type: | SIEMENS |
| | IE Efficiency class: | IE3 |
| | Rated power - P2: | 7.5 kW |
| | Mains frequency: | 50 Hz |
| | Rated voltage: | 3 x 380-420D/660-725Y V |
| | Rated current: | 16,0-14,6/9,20-8,40 A |
| | Starting current: | 630-630 % |
| | Cos phi - power factor: | 0.80 |
| | Rated speed: | 975 rpm |
| | Efficiency: | IE3 89,1% |
| | Motor efficiency at full load: | 89.1-89.1 % |
| | Motor efficiency at 3/4 load: | 90.0-90.0 % |
| | Motor efficiency at 1/2 load: | 89.8-89.8 % |
| | Number of poles: | 6 |
| | Enclosure class (IEC 34-5): | IP55 |
| | Insulation class (IEC 85): | F |
| | Motor No: | 98957458 |
| | | |
| | Others: | |
| | Minimum efficiency index, MEI ≥: | 0.63 |
| | Net weight: | 459 kg |
| | Gross weight: | 527 kg |
| | Shipping volume: | 1.52 m³ |
| | Country of origin: | HU |
| | Custom tariff no.: | 84137059 |

# 98971659 NK 150-250/252 EUP A1F1AE-SBQQE 50 Hz

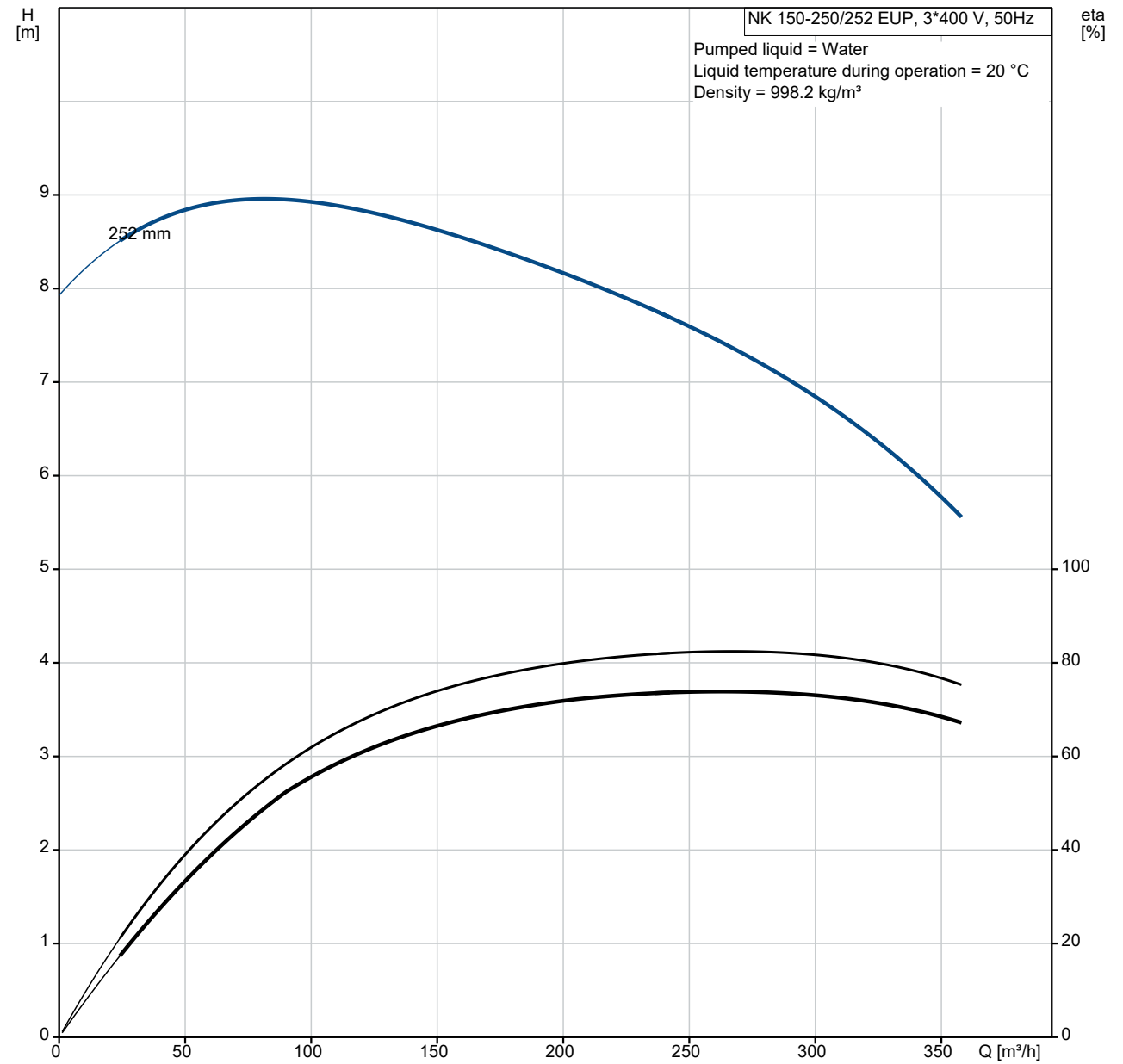


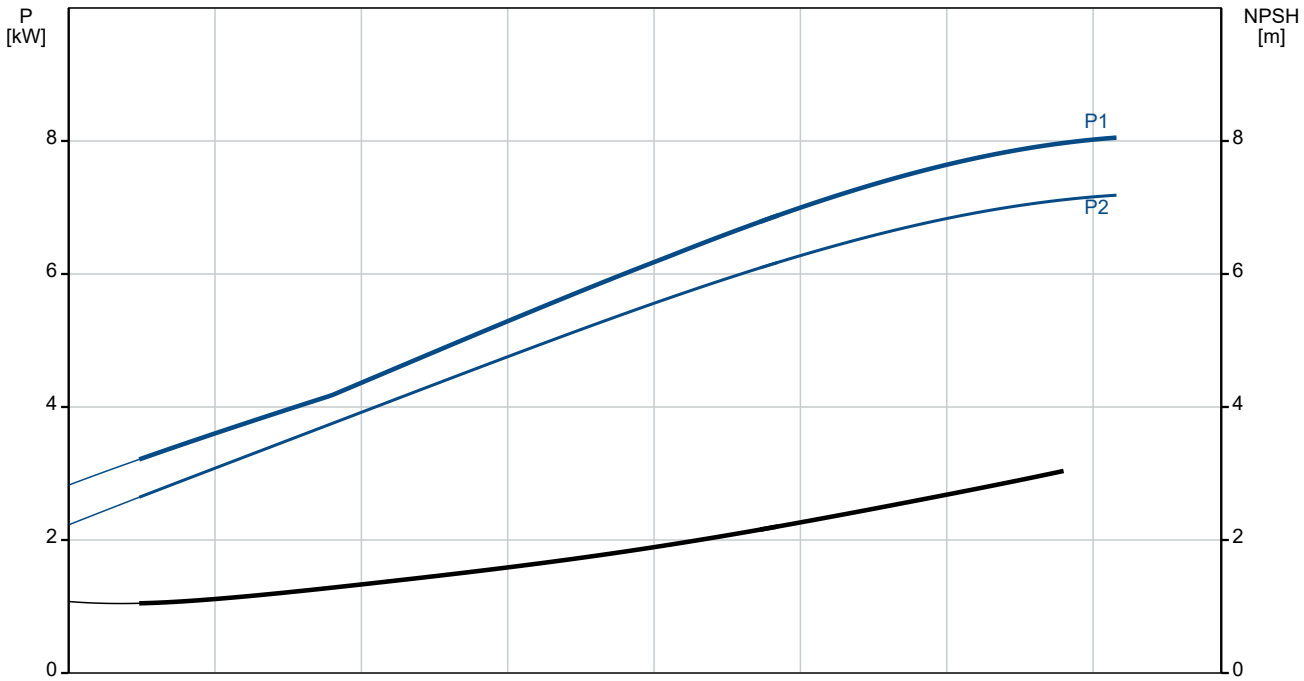

| Description | Value |
|---|---|
| **General information:** | |
| Product name: | NK 150-250/252 EUP A1F1AE-SBQQE |
| Product No: | 98971659 |
| EAN number: | 5712604469750 |
| **Technical:** | |
| Pump speed on which pump data are based: | 975 rpm |
| Rated flow: | 267.9 m³/h |
| Pump with motor: | Y |
| Rated head: | 7.274 m |
| Actual impeller diameter: | 252 mm |
| Nominal impeller diameter: | 250 |
| Shaft diameter: | 42 mm |
| Code for shaft seal: | BQQE |
| Curve tolerance: | ISO9906:2012 3B2 |
| Pump version: | A1 |
| Bearing design: | Standard |
| **Materials:** | |
| Pump housing: | Cast iron |
| Pump housing: | EN-GJL-250 |
| Pump housing: | ASTM class 35 |
| Wear ring: | Brass |
| Impeller: | Cast iron |
| Impeller: | EN-GJL-200 |
| Impeller: | ASTM class 30 |
| Shaft: | Stainless steel |
| Shaft: | EN 1.4301 |
| Shaft: | AISI 304 |
| Internal pump house coating: | CED |
| Material code: | A |
| Code for rubber: | E |
| **Installation:** | |
| Maximum ambient temperature: | 55 °C |
| Maximum operating pressure: | 10 bar |
| Pipe connection standard: | EN 1092-2 |
| Type of inlet connection: | DIN |
| Type of outlet connection: | DIN |
| Size of inlet connection: | DN 200 |
| Size of outlet connection: | DN 150 |
| Pressure rating for connection: | PN 10 |
| Coupling type: | Flexible w/o spacer |
| Base frame design: | EN/ISO |
| Grouting: | N |
| Connect code: | F |
| **Liquid:** | |
| Pumped liquid: | Water |
| Liquid temperature range: | -25 .. 120 °C |
| Selected liquid temperature: | 20 °C |
| Density: | 998.2 kg/m³ |
| **Electrical data:** | |
| Motor type: | SIEMENS |
| IE Efficiency class: | IE3 |
| Rated power - P2: | 7.5 kW |
| Mains frequency: | 50 Hz |
| Rated voltage: | 3 x 380-420D/660-725Y V |
| Rated current: | 16,0-14,6/9,20-8,40 A |
| Starting current: | 630-630 % |
| Cos phi - power factor: | 0.80 |
| Rated speed: | 975 rpm |
| Efficiency: | IE3 89,1% |
| Motor efficiency at full load: | 89.1-89.1 % |
| Motor efficiency at 3/4 load: | 90.0-90.0 % |
| Motor efficiency at 1/2 load: | 89.8-89.8 % |

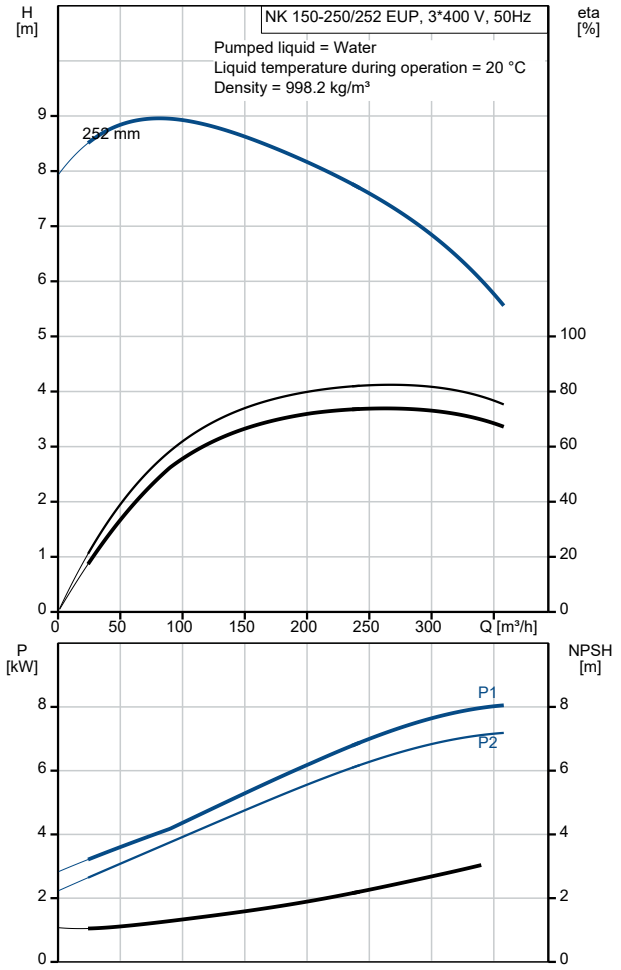

| Description | Value |
|---|---|
| Number of poles: | 6 |
| Enclosure class (IEC 34-5): | IP55 |
| Insulation class (IEC 85): | F |
| Motor protec: | PTC |
| Motor No: | 98957458 |
| **Controls:** | |
| Frequency converter: | NONE |
| Pressure sensor: | N |
| **Others:** | |
| Minimum efficiency index, MEI ≥: | 0.63 |
| Net weight: | 459 kg |
| Gross weight: | 527 kg |
| Shipping volume: | 1.52 $m^3$ |
| Country of origin: | HU |
| Custom tariff no.: | 84137059 |

# 98971659 NK 150-250/252 EUP A1F1AE-SBQQE 50 Hz

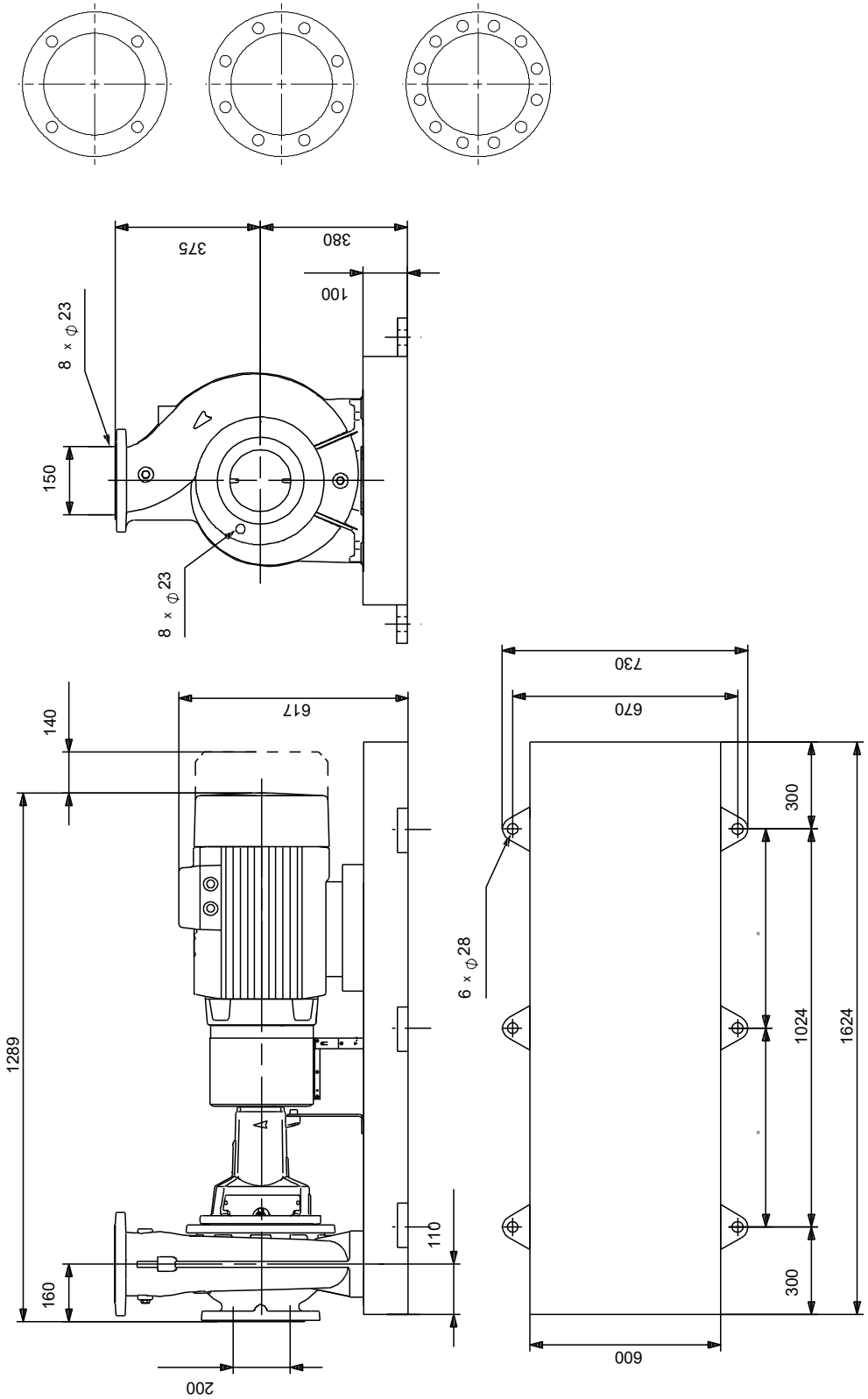


Note! All units are in [mm] unless others are stated.
Disclaimer: This simplified dimensional drawing does not show all details.

# Spare parts NK 150-250/252 EUP, Product No. 98971659
# Produced After 1633 (production year and week number)

| Pos | Omschrijving | Opmerking tekst | Classificatie Gegevens | Onderdeelnr. | Aantal | Eenheid |
|---|---|---|---|---|---|---|
| - | Kit, bearing | | | 95919874 | 1 | pcs |
| 53a | O-ring | | Diameter: 3 | | 1 | |
| | | | Thickness: 109,5 | | | |
| 53 | Ball bearing | | | | 1 | |
| 54a | O-ring | | Diameter: 3 | | 1 | |
| | | | Thickness: 109,5 | | | |
| 54 | Ball bearing | | | | 1 | |
| 99 | Retaining ring | | | | 2 | |
| 156a | Bearing cover | | | | 2 | |
| 159a | V-ring | | | | 2 | |
| - | Kit, bearing bracket | | | 96935044 | 1 | pcs |
| 7.k | Hex socket head cap screw | | Length (mm): 10 | | 4 | |
| | | | Thread: M6 | | | |
| 36.a | Nut | | | | 10 | |
| 76a | Rivet | | | | 2 | |
| 86 | Bearing bracket | | | | 1 | |
| 90.e | Hex head screw | | Length (mm): 25 | | 1 | |
| | | | Thread: M12 | | | |
| 124d | Shaft guard | | | | 1 | |
| 124d | Shaft guard | | | | 1 | |
| 124.d | Pan head screw | | | | 4 | |
| - | Kit, bolt for coupling | | | 96809941 | 1 | pcs |
| - | Bolt | | | | 8 | |
| - | Bolt | | | | | 1 |
| 89q | Washer | | Internal diameter: 16,5 | | | |
| | | | Outer diameter: 25,0 | | | |
| 89g | Spring lock washer | | | | | |
| 89f | Washer | | Internal diameter: 14,5 | | | |
| | | | Outer diameter: 25 | | | |
| 89e | Nut | | | | | |
| 89d | Bolt | | | | | |
| 89 | Rubber blocks for coupling | | | | | 1 |
| - | Kit, coupling | | | 96848915 | 1 | pcs |
| - | Coupling cpl. | | | | 1 | |
| - | Bolt | | | | | 8 |
| - | Bolt | | | | | |
| 89q | Washer | | Internal diameter: 16,5 | | | |
| | | | Outer diameter: 25,0 | | | |
| 89g | Spring lock washer | | | | | |
| 89f | Washer | | Internal diameter: 14,5 | | | |
| | | | Outer diameter: 25 | | | |
| 89e | Nut | | | | | |
| 89d | Bolt | | | | | |
| 89 | Rubber blocks for coupling | | | | | |
| 89o | Connector | | | | | 1 |
| 89b | Socket set screw | | | | | 2 |
| 89a | Socket set screw | | | | | 2 |
| 89.p | Coupling female | | | | | 1 |
| 11.a | Parallel key | | | | 1 | |
| - | Kit, coupling guard | | | 98079149 | 1 | pcs |
| 7b | Hex socket head cap screw | | Length (mm): 10 | | 4 | |
| | | | Thread: M6 | | | |
| 7b | Retainer for coupling guard | | | | 1 | |
| - 7 | Coupling guard cpl. | | | | 1 | |
| 7e | Hex socket head cap screw | | | | | 3 |
| 7c | Spacer f/coupling guard | | | | | 1 |
| 7 | Guard | | | | | 1 |
| 94 | Lock nut | | Thread: M6 | | | 2 |
| - | Kit, cover | | | 96927327 | 1 | pcs |

| Pos | Omschrijving | Opmerking tekst | Classificatie Gegevens | Onderdeelnr. | Aantal | Eenheid |
|---|---|---|---|---|---|---|
| 18 | Plug | | | | 1 | |
| 36 | Nut | | Thread: M12 | | 10 | |
| 77 | Cover f/mech. seal | | | | 1 | |
| - | Kit, foot for bearing bracket | | | 96909494 | 1 | pcs |
| | Nut | | Thread: M12 | | 2 | |
| 66 | Washer | | | | 2 | |
| 90.e | Hex head screw | | Length (mm): 25 | | 1 | |
| | | | Thread: M12 | | | |
| 90.d | Hex head bolt | | Length (mm): 110 | | 2 | |
| | | | Thread: M12 | | | |
| 90.d | Hex head bolt | | Length (mm): 70 | | 2 | |
| | | | Thread: M12 | | | |
| 90.d | Hex head screw | | Length (mm): 30 | | 2 | |
| | | | Thread: M12 | | | |
| 90.c | Foot | | | | 1 | |
| - | Kit, foot for coupling guard | | | 96848500 | 1 | pcs |
| 7h | Hex head screw | | Length (mm): 16 | | 2 | |
| | | | Thread: M8 | | | |
| - 7.d | Foot cpl. | | | | 1 | |
| 7l | Support f/coupling guard foot | | | | | 1 |
| 7h | Hex socket head cap screw | | | | | 2 |
| 7d | Foot for coupling guard | | | | | 1 |
| 66 | Washer | | | | | 2 |
| 66 | Washer | | | | 2 | |
| - | Kit, nut | | | 96939132 | 1 | pcs |
| 11 | Key | | | | 1 | |
| - 36 | Nut | | | | 1 | |
| 66a | Spring lock washer | | | | | 1 |
| 66 | Washer | | | | | 1 |
| 67 | Nut | | Thread: M24 | | | 1 |
| - | Kit, pump housing | | | 98801847 | 1 | pcs |
| 6 | Pump housing | | | | 1 | |
| 20 | Plug | | | | 2 | |
| 36 | Nut | | Thread: M12 | | 10 | |
| - | Kit, rubber blocks f. coupling | | | 96789247 | 1 | pcs |
| 89 | Rubber blocks for coupling | | | | 8 | |
| - | Kit, shaft | | | 96861522 | 1 | pcs |
| 11.a | Parallel key | | | | 1 | |
| 11 | Key | | | | 1 | |
| 51 | Shaft | | | | 1 | |
| 66a | Spring lock washer | | | | 1 | |
| 66 | Washer | | | | 1 | |
| 67 | Nut | | Thread: M24 | | 1 | |
| - | Kit, shaft cover | | | 96809961 | 1 | pcs |
| 124d | Shaft guard | | | | 1 | |
| 124d | Shaft guard | | | | 1 | |
| 124.d | Pan head screw | | | | 4 | |
| - | Spare, wear ring | | | 96810109 | 1 | pcs |
| 45 | Wear ring | | | | 1 | |
| - | V-ring | | | 96871240 | 1 | pcs |
| 159a | V-ring | | | | 2 | |
| | Motor | | | | 1 | pcs |
| 7k | Hex socket head cap screw | | Length (mm): 10 | 97506946 | 4 | pcs |
| | | | Thread: M6 | | | |
| 28 | Hex head screw | | Length (mm): 25 | 99522923 | 1 | pcs |
| | | | Thread: M12 | | | |
| 36 | Nut | | Thread: M12 | 96620479 | 10 | pcs |
| 49 | Impeller | | | 99658706 | 1 | pcs |
| 54a | O-ring | | Diameter: 3 | 97511812 | 2 | pcs |
| | | | Thickness: 109,5 | | | |
| 67 | Nut | | Thread: M25 | 92526532 | 1 | pcs |
| 72.a | O-ring | | Diameter: 278,99 | 92547634 | 1 | pcs |
| | | | Material type: EPDM | | | |
| | | | Thickness: 3,53 | | | |

| Pos | Omschrijving | Opmerking tekst | Classificatie Gegevens | Onderdeelnr. | Aantal | Eenheid |
|---|---|---|---|---|---|---|
| 72.a | O-ring | | Diameter: 278,99 | 92526510 | 1 | pcs |
| | | | Material type: EPDM | | | |
| | | | Thickness: 3,53 | | | |
| 72.a | O-ring | | Diameter: 278,99 | 97511839 | 1 | pcs |
| | | | Material type: EPDM | | | |
| | | | Thickness: 3,53 | | | |
| 72.a | O-ring | | Diameter: 278,99 | 97757673 | 1 | pcs |
| | | | Material type: EPDM | | | |
| | | | Thickness: 3,53 | | | |
| 77a | Pan head screw | | | 99266550 | 4 | pcs |
| 86 | Bearing bracket | | | 99081097 | 1 | pcs |
| 99 | Retaining ring | | | 99415814 | 2 | pcs |
| 156a | Bearing cover | | | 97506939 | 2 | pcs |