# Inventflow: Grundfos A-partner

## Grundfos NK 40-200/172 A1F2AE-SBQQE

Find the pump here:
https://inventflow.nl/en/pompenfilter/nk/grundfos-nk-40-200-172-a1f2ae-sbqqe

### Contact

info@inventflow.nl
+31 (0) 546 45 80 72

### Datasheet

| Qty. | Description |
|---|---|
| 1 | **NK 40-200/172 A1F2AE-SBQQE** |

**Note! Product picture may differ from actual product**

Product No.: 98971776

Non-self priming, single-stage centrifugal
Flange standard: pump according to EN 1092-2.

The pump is for the pumping of thin, clean or
slightly contaminated
liquids without abrasive or long-fibred
solids.

Phase: Pump and 3-phase AC motor are mounted
as separate units on a common baseplate and

The impeller is hydraulically as well as
dynamically balanced.

The pump has the following characteristics:
- flange dimensions according to
EN 1092-2,

Pump housing: - Cast iron volute
pump housing,
- stainless steel shaft

Impeller: and Cast iron impeller
and bronze wear rings,
- unbalanced mechanical shaft seal
according to EN 12756.

Controls:
Frequency converter: NONE
Pressure sensor: N

Liquid:
Pumped liquid: Water
Liquid temperature range: -25 .. 120 °C
Selected liquid temperature: 20 °C
Density: 998.2 kg/m³

Technical:
Pump speed on which pump data are based: 2920 rpm
Rated flow: 42.49 m³/h
Pump with motor: Y
Rated head: 29.6 m
Actual impeller diameter: 172 mm
Nominal impeller diameter: 200
Code for shaft seal: BQQE
Curve tolerance: ISO9906:2012 3B2
Bearing design: Standard

Materials:
Pump housing: Cast iron
EN-GJL-250
ASTM class 35
Wear ring: Brass
Impeller: Cast iron
EN-GJL-200

| Qty. | Description | |
|---|---|---|
| | | ASTM class 30 |
| | Shaft: | Stainless steel |
| | | EN 1.4301 |
| | | AISI 304 |
| | Internal pump house coating: | CED |
| | | |
| | Installation: | |
| | Maximum ambient temperature: | 60 °C |
| | Maximum operating pressure: | 16 bar |
| | Pipe connection standard: | EN 1092-2 |
| | Type of inlet connection: | DIN |
| | Type of outlet connection: | DIN |
| | Size of inlet connection: | DN 65 |
| | Size of outlet connection: | DN 40 |
| | Pressure rating for connection: | PN 16 |
| | Coupling type: | Flexible w/o spacer |
| | Base frame design: | EN/ISO |
| | Grouting: | N |
| | | |
| | Electrical data: | |
| | Motor type: | 132SC |
| | IE Efficiency class: | IE3 |
| | Rated power - P2: | 5.5 kW |
| | Mains frequency: | 50 Hz |
| | Rated voltage: | 3 x 380-415D V |
| | Rated current: | 11 A |
| | Starting current: | 1080-1180 % |
| | Cos phi - power factor: | 0.87-0.82 |
| | Rated speed: | 2920-2940 rpm |
| | Efficiency: | IE3 89,2% |
| | Motor efficiency at full load: | 89.2 % |
| | Motor efficiency at 3/4 load: | 90.0 % |
| | Motor efficiency at 1/2 load: | 89.6 % |
| | Number of poles: | 2 |
| | Enclosure class (IEC 34-5): | 55 Dust/Jetting |
| | Insulation class (IEC 85): | F |
| | Motor No: | 87322374 |
| | | |
| | Others: | |
| | Minimum efficiency index, MEI ≥: | 0.59 |
| | Net weight: | 162 kg |
| | Gross weight: | 183 kg |
| | Shipping volume: | 0.395 m³ |
| | Country of origin: | HU |
| | Custom tariff no.: | 84137059 |

# 98971776 NK 40-200/172 A1F2AE-SBQQE 50 Hz

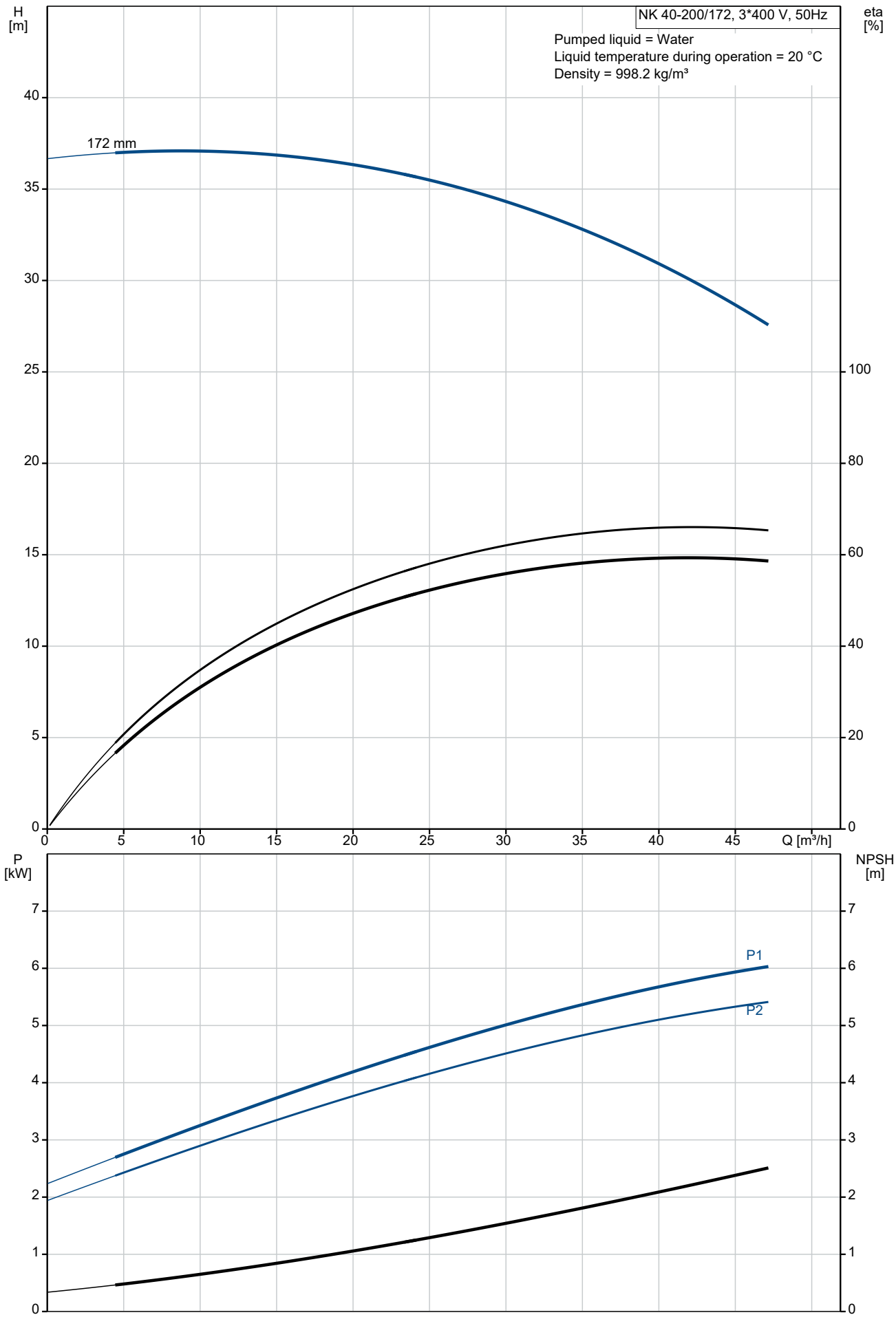

| Description | Value |
|---|---|
| **General information:** | |
| Product name: | NK 40-200/172 A1F2AE-SBQQE |
| Product No: | 98971776 |
| EAN number: | 5712604472101 |
| **Technical:** | |
| Pump speed on which pump data are based: | 2920 rpm |
| Rated flow: | 42.49 m³/h |
| Pump with motor: | Y |
| Rated head: | 29.6 m |
| Actual impeller diameter: | 172 mm |
| Nominal impeller diameter: | 200 |
| Shaft diameter: | 24 mm |
| Code for shaft seal: | BQQE |
| Curve tolerance: | ISO9906:2012 3B2 |
| Pump version: | A1 |
| Bearing design: | Standard |
| **Materials:** | |
| Pump housing: | Cast iron |
| Pump housing: | EN-GJL-250 |
| Pump housing: | ASTM class 35 |
| Wear ring: | Brass |
| Impeller: | Cast iron |
| Impeller: | EN-GJL-200 |
| Impeller: | ASTM class 30 |
| Shaft: | Stainless steel |
| Shaft: | EN 1.4301 |
| Shaft: | AISI 304 |
| Internal pump house coating: | CED |
| Material code: | A |
| Code for rubber: | E |
| **Installation:** | |
| Maximum ambient temperature: | 60 °C |
| Maximum operating pressure: | 16 bar |
| Pipe connection standard: | EN 1092-2 |
| Type of inlet connection: | DIN |
| Type of outlet connection: | DIN |
| Size of inlet connection: | DN 65 |
| Size of outlet connection: | DN 40 |
| Pressure rating for connection: | PN 16 |
| Coupling type: | Flexible w/o spacer |
| Base frame design: | EN/ISO |
| Grouting: | N |
| Connect code: | F |
| **Liquid:** | |
| Pumped liquid: | Water |
| Liquid temperature range: | -25 .. 120 °C |
| Selected liquid temperature: | 20 °C |
| Density: | 998.2 kg/m³ |
| **Electrical data:** | |
| Motor type: | 132SC |
| IE Efficiency class: | IE3 |
| Rated power - P2: | 5.5 kW |
| Mains frequency: | 50 Hz |
| Rated voltage: | 3 x 380-415D V |
| Rated current: | 11 A |
| Starting current: | 1080-1180 % |
| Cos phi - power factor: | 0.87-0.82 |
| Rated speed: | 2920-2940 rpm |
| Efficiency: | IE3 89,2% |
| Motor efficiency at full load: | 89.2 % |
| Motor efficiency at 3/4 load: | 90.0 % |
| Motor efficiency at 1/2 load: | 89.6 % |

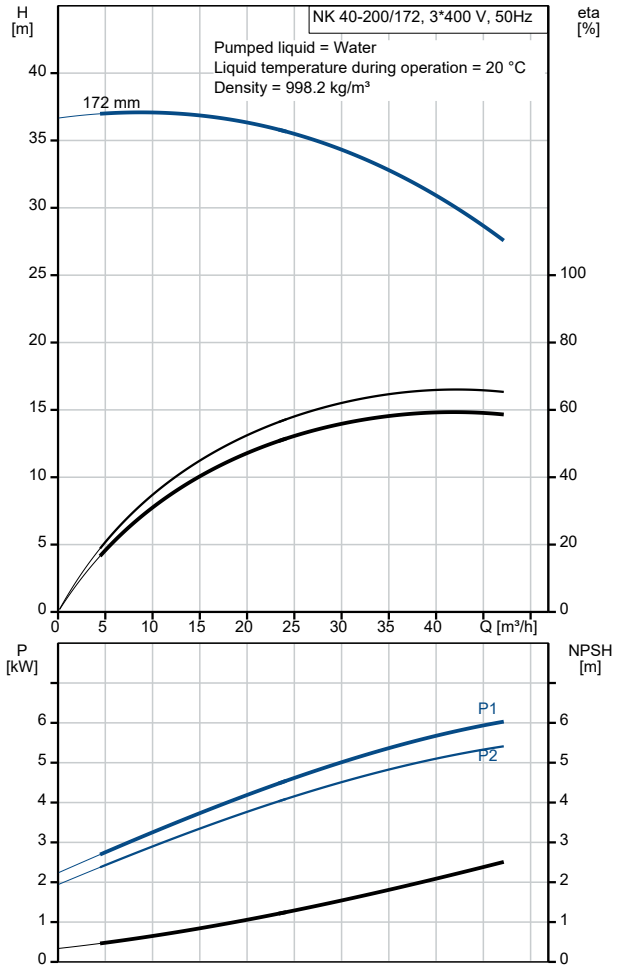

| Description | Value |
|---|---|
| Number of poles: | 2 |
| Enclosure class (IEC 34-5): | 55  Dust/Jetting |
| Insulation class (IEC 85): | F |
| Motor protec: | PTC |
| Motor No: | 87322374 |
| **Controls:** | |
| Frequency converter: | NONE |
| Pressure sensor: | N |
| **Others:** | |
| Minimum efficiency index, MEI ≥: | 0.59 |
| Net weight: | 162 kg |
| Gross weight: | 183 kg |
| Shipping volume: | 0.395 m³ |
| Country of origin: | HU |
| Custom tariff no.: | 84137059 |

# 98971776 NK 40-200/172 A1F2AE-SBQQE 50 Hz

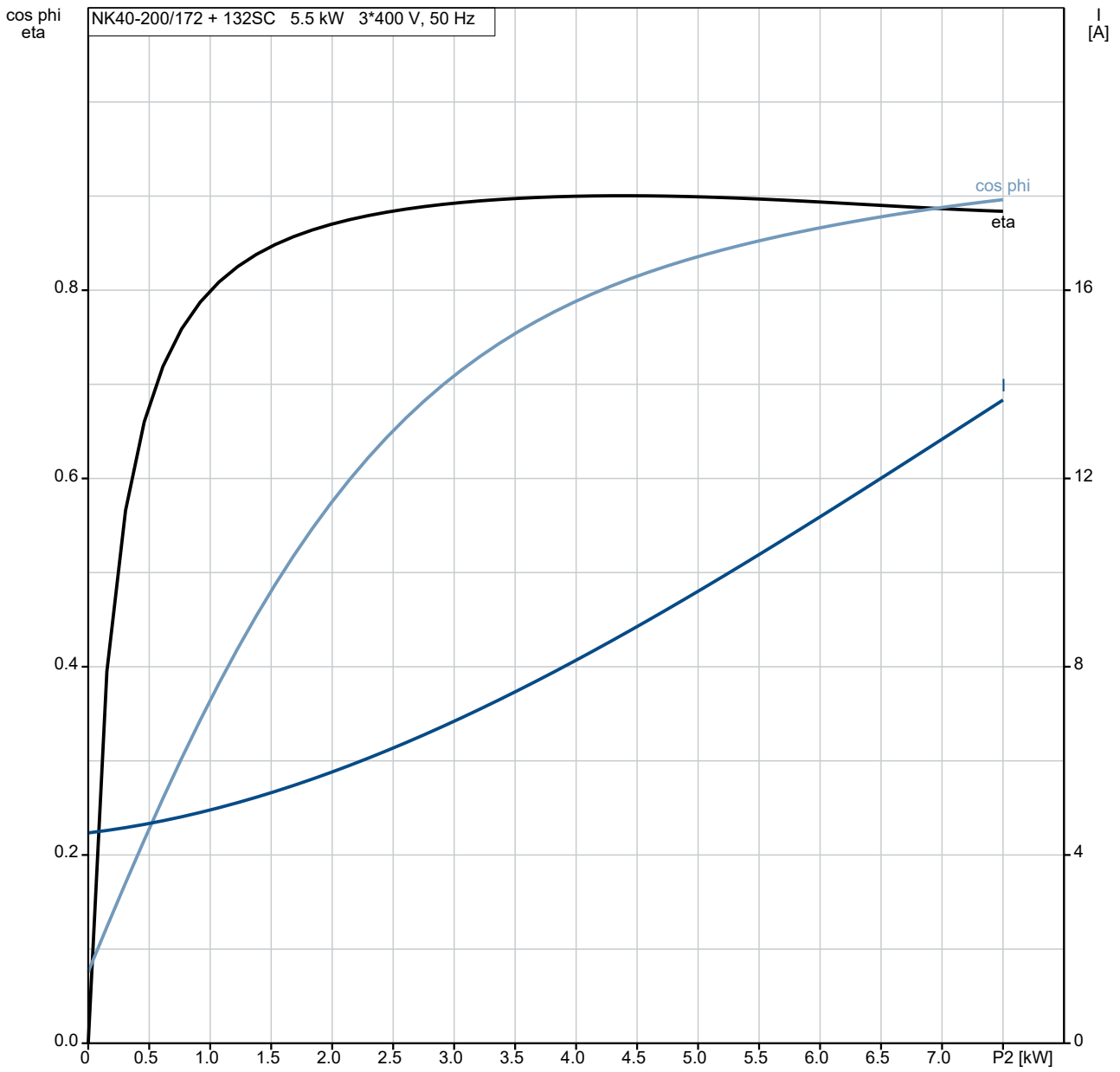


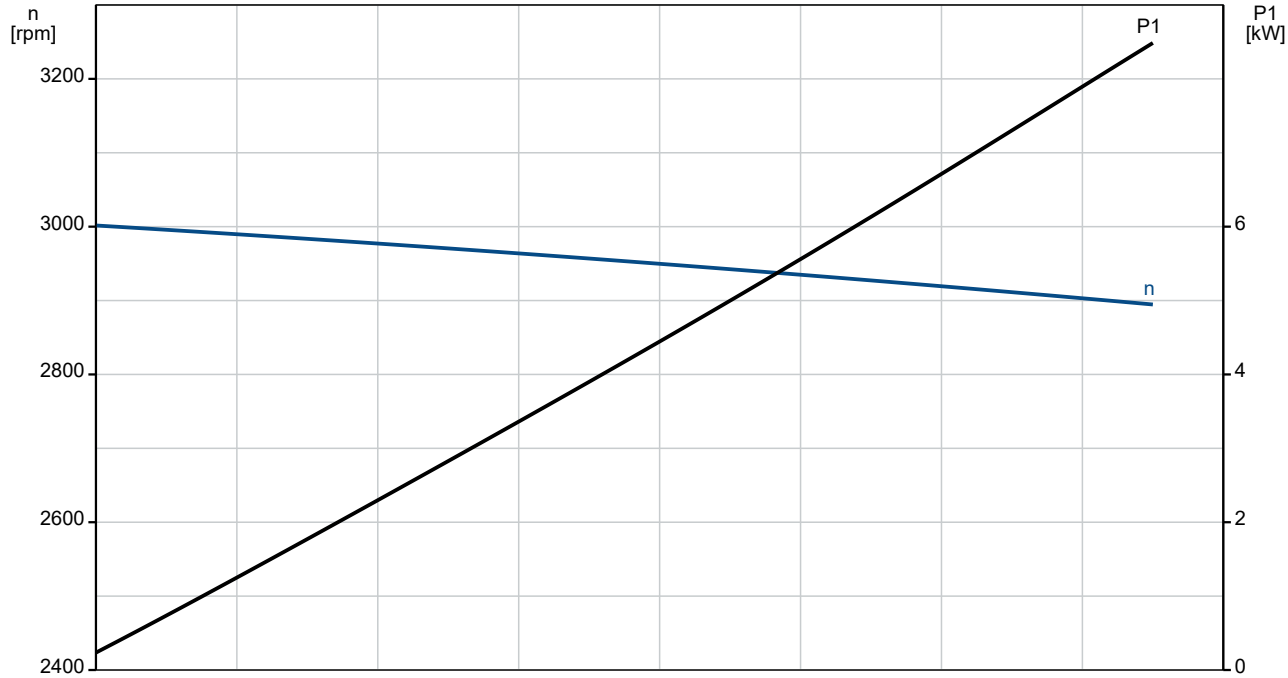

# 98971776 NK 40-200/172 A1F2AE-SBQQE 50 Hz

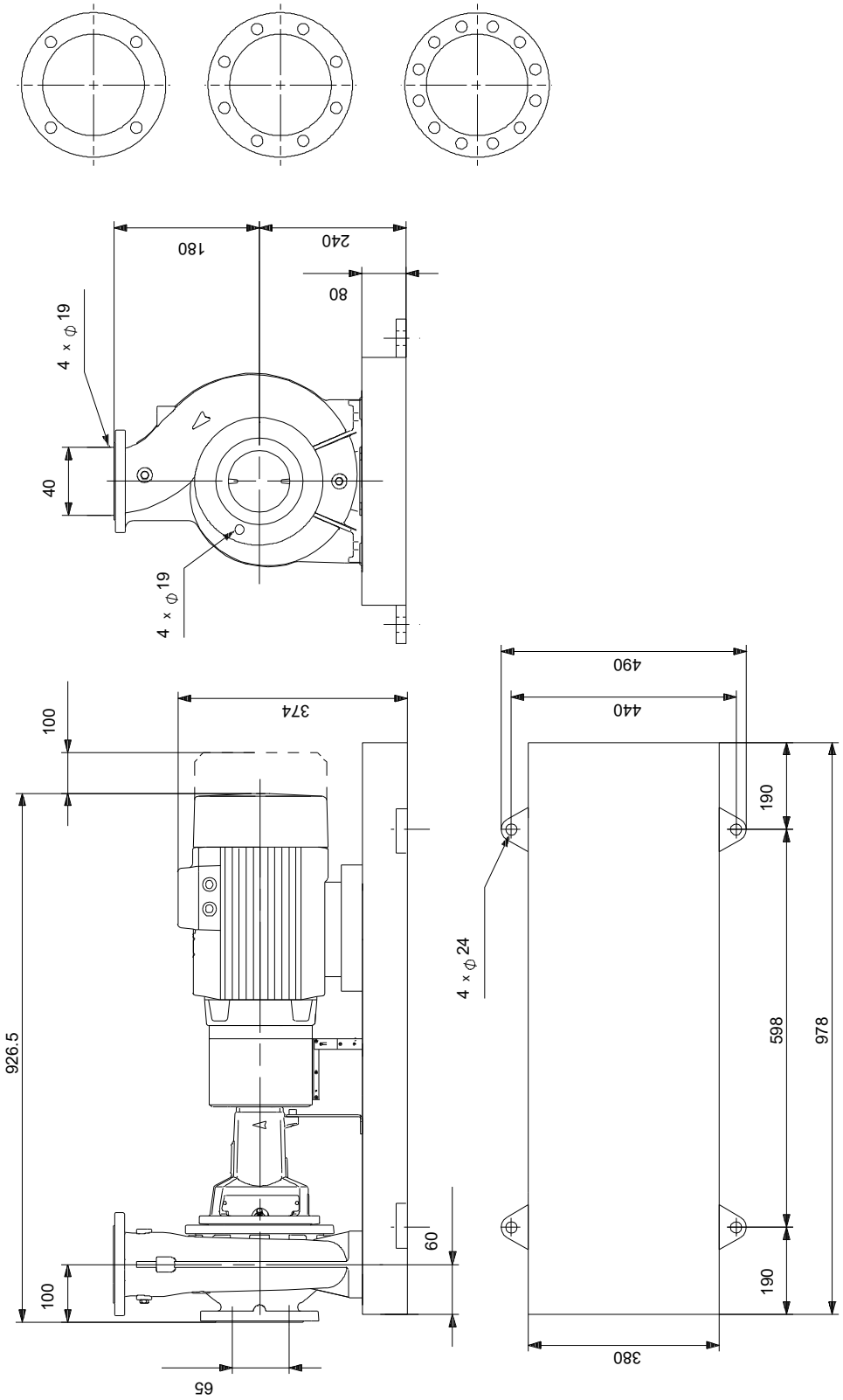


Note! All units are in [mm] unless others are stated.
Disclaimer: This simplified dimensional drawing does not show all details.

# Spare parts NK 40-200/172, Product No. 98971776
# Produced After 1101 (production year and week number)

| Pos | Omschrijving | Opmerking tekst | Classificatie Gegevens | Onderdeelnr. | Aantal | Eenheid |
|---|---|---|---|---|---|---|
| - | Kit, bearing | | | 96579598 | 1 | pcs |
| 53a | O-ring | | Diameter: 71,5 | | 1 | |
| | | | Material type: EPDM | | | |
| | | | Thickness: 3 | | | |
| 53 | Ball bearing | | | | 1 | |
| 54a | O-ring | | Diameter: 71,5 | | 1 | |
| | | | Material type: EPDM | | | |
| | | | Thickness: 3 | | | |
| 54 | Ball bearing | | | | 1 | |
| 156a | Bearing cover | | | | 2 | |
| 159f | Retaining ring | | | | 2 | |
| 159a | V-ring | | | | 2 | |
| - | Kit, bearing bracket | | | 95131793 | 1 | pcs |
| 7.k | Hex socket head cap screw | | Length (mm): 10 | | 4 | |
| | | | Thread: M6 | | | |
| 36.a | Nut | | Thread: M10 | | 6 | |
| 76a | Rivet | | | | 2 | |
| 86 | Bearing bracket | | | | 1 | |
| 124d | Shaft guard | | | | 1 | |
| 124d | Shaft guard | | | | 1 | |
| 124.d | Pan head screw | | | | 4 | |
| - | Kit, bolt for coupling | | | 96809941 | 1 | pcs |
| - | Bolt | | | | 8 | |
| - | Bolt | | | | | 1 |
| 89q | Washer | | Internal diameter: 16,5 | | | |
| | | | Outer diameter: 25,0 | | | |
| 89g | Spring lock washer | | | | | |
| 89f | Washer | | Internal diameter: 14,5 | | | |
| | | | Outer diameter: 25 | | | |
| 89e | Nut | | | | | |
| 89d | Bolt | | | | | |
| 89 | Rubber blocks for coupling | | | | | 1 |
| - | Kit, coupling | | | 96848896 | 1 | pcs |
| - | Coupling cpl. | | | | 1 | |
| - | Bolt | | | | | 8 |
| - | Bolt | | | | | |
| 89q | Washer | | Internal diameter: 16,5 | | | |
| | | | Outer diameter: 25,0 | | | |
| 89g | Spring lock washer | | | | | |
| 89f | Washer | | Internal diameter: 14,5 | | | |
| | | | Outer diameter: 25 | | | |
| 89e | Nut | | | | | |
| 89d | Bolt | | | | | |
| 89 | Rubber blocks for coupling | | | | | |
| 89b | Socket set screw | | | | | 2 |
| 89a | Socket set screw | | | | | 2 |
| 89.p | Coupling female | | | | | 1 |
| 89.o | Connector | | | | | 1 |
| 11.a | Parallel key | | Dimension: 8X7X40 | | 1 | |
| - | Kit, coupling guard | | | 97945083 | 1 | pcs |
| 7b | Hex socket head cap screw | | Length (mm): 10 | | 4 | |
| | | | Thread: M6 | | | |
| 7b | Retainer for coupling guard | | | | 1 | |
| 7 | Coupling guard cpl. | | | | 1 | |
| - | Kit, cover | | | 95131801 | 1 | pcs |

| Pos | Omschrijving | Opmerking tekst | Classificatie Gegevens | Onderdeelnr. | Aantal | Eenheid |
|---|---|---|---|---|---|---|
| 18 | Plug | | | | 1 | |
| 36 | Nut | | Thread: M10 | | 6 | |
| 77 | Cover f/mech. seal | | | | 1 | |
| - | Kit, foot for bearing bracket | | | 96909147 | 1 | pcs |
| | Nut | | Thread: M12 | | 2 | |
| 66 | Washer | | | | 2 | |
| 90.e | Hex head screw | | Length (mm): 25 | | 1 | |
| | | | Thread: M12 | | | |
| 90.d | Hex head bolt | | Length (mm): 100 | | 2 | |
| | | | Thread: M12 | | | |
| 90.d | Hex head bolt | | Length (mm): 80 | | 2 | |
| | | | Thread: M12 | | | |
| 90.d | Hex head bolt | | Length (mm): 50 | | 2 | |
| | | | Thread: M12 | | | |
| 90.d | Hex head screw | | Length (mm): 60 | | 2 | |
| | | | Thread: M12 | | | |
| 90.d | Hex head screw | | Length (mm): 35MM | | 2 | |
| | | | Thread: M12 | | | |
| 90.d | Hex head screw | | Length (mm): 30 | | 2 | |
| | | | Thread: M12 | | | |
| 90.c | Foot | | | | 1 | |
| - | Kit, foot for coupling guard | | | 96847089 | 1 | pcs |
| 7h | Hex head screw | | Length (mm): 16 | | 2 | |
| | | | Thread: M8 | | | |
| - 7d | Foot cpl. | | | | 1 | |
| 7d | Foot for coupling guard | | | | | 1 |
| 66 | Washer | | | | 2 | |
| - | Kit, nut | | | 96939128 | 1 | pcs |
| 11 | Parallel key | | Dimension: 6X6X35 | | 1 | |
| - 36 | Nut | | | | 1 | |
| 66a | Spring lock washer | | | | | 1 |
| 66 | Washer | | | | | 1 |
| 67 | Nut | | Thread: M14 | | | 1 |
| - | Kit, pump housing | | | 95131710 | 1 | pcs |
| - 6 | Pump housing | | | | 1 | |
| 26 | Staybolt | | Length (mm): 35 | | | 8 |
| | | | Thread: M10 | | | |
| 45 | Wear ring | | | | | 1 |
| 20 | Pipe plug | | Thread: R 3/8 | | 2 | |
| 36 | Nut | | Thread: M10 | | 8 | |
| - | Kit, rubber blocks f. coupling | | | 96789247 | 1 | pcs |
| 89 | Rubber blocks for coupling | | | | 8 | |
| - | Kit, shaft | | | 96039654 | 1 | pcs |
| 11.a | Parallel key | | Dimension: 8X7X40 | | 1 | |
| 11 | Parallel key | | Dimension: 6X6X35 | | 1 | |
| 51 | Shaft | | | | 1 | |
| 66a | Spring lock washer | | | | 1 | |
| 66 | Washer | | | | 1 | |
| 67 | Nut | | Thread: M14 | | 1 | |
| - | Kit, shaft cover | | | 96809954 | 1 | pcs |
| 124d | Shaft guard | | | | 1 | |
| 124d | Shaft guard | | | | 1 | |
| 124.d | Pan head screw | | | | 4 | |
| - | Spare, wear ring | | | 96810100 | 1 | pcs |
| 45 | Wear ring | | | | 1 | |
| - | Spare, wear ring | | | 96810102 | 1 | pcs |
| 45b | Wear ring | | | | 1 | |
| - | V-ring | | | 96591314 | 1 | pcs |
| 159a | V-ring | | | | 1 | |
| - | Motor | | | 85904579 | 1 | pcs |
| - | Kit, bearing cpl. | | | 96279797 | 1 | |

| Pos | Omschrijving | Opmerking tekst | Classificatie Gegevens | Onderdeelnr. | Aantal | Eenheid |
|---|---|---|---|---|---|---|
| 54 | Ball bearing | | | | 1 | |
| 111 | Ball bearing | | Designation: 6206.2Z.C3.SYN | | 1 | |
| 157 | O-ring | | Diameter: 62 | | 1 | |
| | | | Material type: NBR | | | |
| | | | Thickness: 3 | | | |
| 158 | Waved washer | | | | 1 | |
| 187 | Retaining ring | | | | 1 | |
| 188 | Retaining ring | | | | 1 | |
| - | Kit, end shield | | | 96279776 | 1 | |
| 156b | Flange | | | | 1 | |
| 159d | Gamma ring | | | | 1 | |
| 186 | Drain plug | | | | 1 | |
| - | Kit, end shield | | | 96279877 | 1 | |
| 106 | O-ring | | Diameter: 62 | | 1 | |
| | | | Material type: NBR | | | |
| | | | Thickness: 3 | | | |
| 156a | End shield | | | | 1 | |
| 158 | Waved washer | | | | 1 | |
| 159a | Seal ring | | | | 1 | |
| - | Kit, eyebolt | | | 96279825 | 1 | |
| 189 | Eyebolt | | | | 1 | |
| - | Kit, fan | | | 96279758 | 1 | |
| 156 | Fan | | | | 1 | |
| 159c | Seal ring | | | | 1 | |
| 159a | Seal ring | | | | 1 | |
| - | Kit, fan cover | | | 96279756 | 1 | |
| 151b | Label | | | | 1 | |
| 151 | Fan cover | | | | 1 | |
| 152 | Pan head thread forming screw | | | | 4 | |
| - | Kit, foot | | | 96279788 | 1 | |
| 191 | Foot | | | | 1 | |
| 192 | Thread forming screw | | | | 4 | |
| - | Kit, key | | | 96279823 | 1 | |
| 40 | Parallel key | | | | 1 | |
| - | Kit, retaining ring | | | 96279801 | 1 | |
| 187 | Retaining ring | | | | 1 | |
| 188 | Retaining ring | | | | 1 | |
| - | Kit, shaft seal | | | 96279768 | 1 | |
| 159d | Gamma ring | | | | 1 | |
| 159a | Seal ring | | | | 1 | |
| - | Kit, staybolts | | | 96279793 | 1 | |
| 181 | Pan head staybolt | | | | 4 | |
| - | Kit, terminal board | | | 96279769 | 1 | |
| | Bracket cpl. | | | | 1 | |
| 163 | Hex socket head screw | | | | 1 | |
| 173a | Base | | | | 1 | |
| 173 | Pan head thread forming screw | | Designation: COMBI TORX T25 | | 1 | |
| 176 | Slot cheese head screw | | Designation: COMBI TORX T25 | | 6 | |
| | | | Length (mm): 10 | | | |
| | | | Thread: M5 | | | |
| 176 | Terminal | | | | 1 | |
| 176 | Connecting piece | | | | 3 | |
| 176 | Wire clamp | | | | 3 | |
| 176 | Terminal board | | | | 1 | |

| Pos | Omschrijving | Opmerking tekst | Classificatie Gegevens | Onderdeelnr. | Aantal | Eenheid |
|---|---|---|---|---|---|---|
| 177 | Pan head screw | | | | | 1 |
| - | Kit, terminal box | | | 96279772 | 1 | |
| 164 | Terminal box cover w/gasket | | | | | 1 |
| 166 | Pan head thread forming screw | | | | | 4 |
| 7k | Hex socket head cap screw | | Length (mm): 10 | 97506946 | 4 | pcs |
| | | | Thread: M6 | | | |
| 28 | Hex head screw | | Length (mm): 25 | 99522923 | 1 | pcs |
| | | | Thread: M12 | | | |
| 36 | Nut | | Thread: M10 | 96620484 | 6 | pcs |
| 49 | Impeller | | | 99074946 | 1 | pcs |
| 53.b | Spacer ring | | | 96938908 | 1 | pcs |
| 54a | O-ring | | Diameter: 71,5 | 97511807 | 2 | pcs |
| | | | Material type: EPDM | | | |
| | | | Thickness: 3 | | | |
| 67 | Nut | | Thread: M14 | 92526531 | 1 | pcs |
| 72.a | O-ring | | Diameter: 221,84 | 92547617 | 1 | pcs |
| | | | Material type: EPDM | | | |
| | | | Thickness: 3,53 | | | |
| 72.a | O-ring | | Diameter: 221,84 | 97511825 | 1 | pcs |
| | | | Material type: EPDM | | | |
| | | | Thickness: 3,53 | | | |
| 72.a | O-ring | | Diameter: 221,84 | 97757671 | 1 | pcs |
| | | | Material type: EPDM | | | |
| | | | Thickness: 3,53 | | | |
| 77a | Pan head screw | | | 99266550 | 4 | pcs |
| 156a | Bearing cover | | | 97506936 | 2 | pcs |