Inventflow: Grundfos A-partner

Grundfos NK 125-315/335 A2F2AE-SBQQE

Find the pump here:
https://inventflow.nl/en/pompenfilter/nk/grundfos-nk-125-315-335-a2f2ae-sbqqe

Contact

info@inventflow.nl
+31 (0) 546 45 80 72

Datasheet

Qty.	Description
1	**NK 125-315/335 A2F2AE-SBQQE**

Note! Product picture may differ from actual product

Product No.: 98972435

Non-self priming, single-stage centrifugal
Flange standard: pump according to EN 1092-2.

The pump is for the pumping of thin, clean or
slightly contaminated
liquids without abrasive or long-fibred
solids.

Phase: Pump and 3-phase AC motor are mounted
as separate units on a common baseplate and

The impeller is hydraulically as well as
dynamically balanced.

The pump has the following characteristics:
- flange dimensions according to
EN 1092-2,

Pump housing: - Cast iron volute
pump housing,
- stainless steel shaft

Impeller: and Cast iron impeller
and bronze wear rings,
- unbalanced mechanical shaft seal
according to EN 12756.

Controls:
Frequency converter: NONE
Pressure sensor: N

Liquid:
Pumped liquid: Water
Liquid temperature range: -25 .. 120 °C
Selected liquid temperature: 20 °C
Density: 998.2 kg/m³

Technical:
Pump speed on which pump data are based: 975 rpm
Rated flow: 168.6 m³/h
Pump with motor: Y
Rated head: 15.66 m
Actual impeller diameter: 335 mm
Nominal impeller diameter: 315
Code for shaft seal: BQQE
Curve tolerance: ISO9906:2012 3B
Bearing design: Standard

Materials:
Pump housing: Cast iron
EN-GJL-250
ASTM class 35
Wear ring: Brass
Impeller: Cast iron
EN-GJL-200

Qty.	Description	
		ASTM class 30
	Shaft:	Stainless steel
		EN 1.4301
		AISI 304
	Internal pump house coating:	CED
	Installation:	
	Maximum ambient temperature:	55 °C
	Maximum operating pressure:	16 bar
	Pipe connection standard:	EN 1092-2
	Type of inlet connection:	DIN
	Type of outlet connection:	DIN
	Size of inlet connection:	DN 150
	Size of outlet connection:	DN 125
	Pressure rating for connection:	PN 16
	Coupling type:	Flexible w/spacer
	Base frame design:	EN/ISO
	Grouting:	N
	Electrical data:	
	Motor type:	SIEMENS
	IE Efficiency class:	IE3
	Rated power - P2:	11 kW
	Mains frequency:	50 Hz
	Rated voltage:	3 x 380-420D/660-725Y V
	Rated current:	23,2-21,0/13,4-12,2 A
	Starting current:	660-660 %
	Cos phi - power factor:	0.80
	Rated speed:	975 rpm
	Efficiency:	IE3 90,3%
	Motor efficiency at full load:	90.3-90.3 %
	Motor efficiency at 3/4 load:	91.1-91.1 %
	Motor efficiency at 1/2 load:	90.8-90.8 %
	Number of poles:	6
	Enclosure class (IEC 34-5):	IP55
	Insulation class (IEC 85):	F
	Motor No:	98957460
	Others:	
	Minimum efficiency index, MEI ≥:	0.70
	Net weight:	475 kg
	Gross weight:	542 kg
	Shipping volume:	1.49 m³
	Country of origin:	HU
	Custom tariff no.:	84137059

98972435 NK 125-315/335 A2F2AE-SBQQE 50 Hz

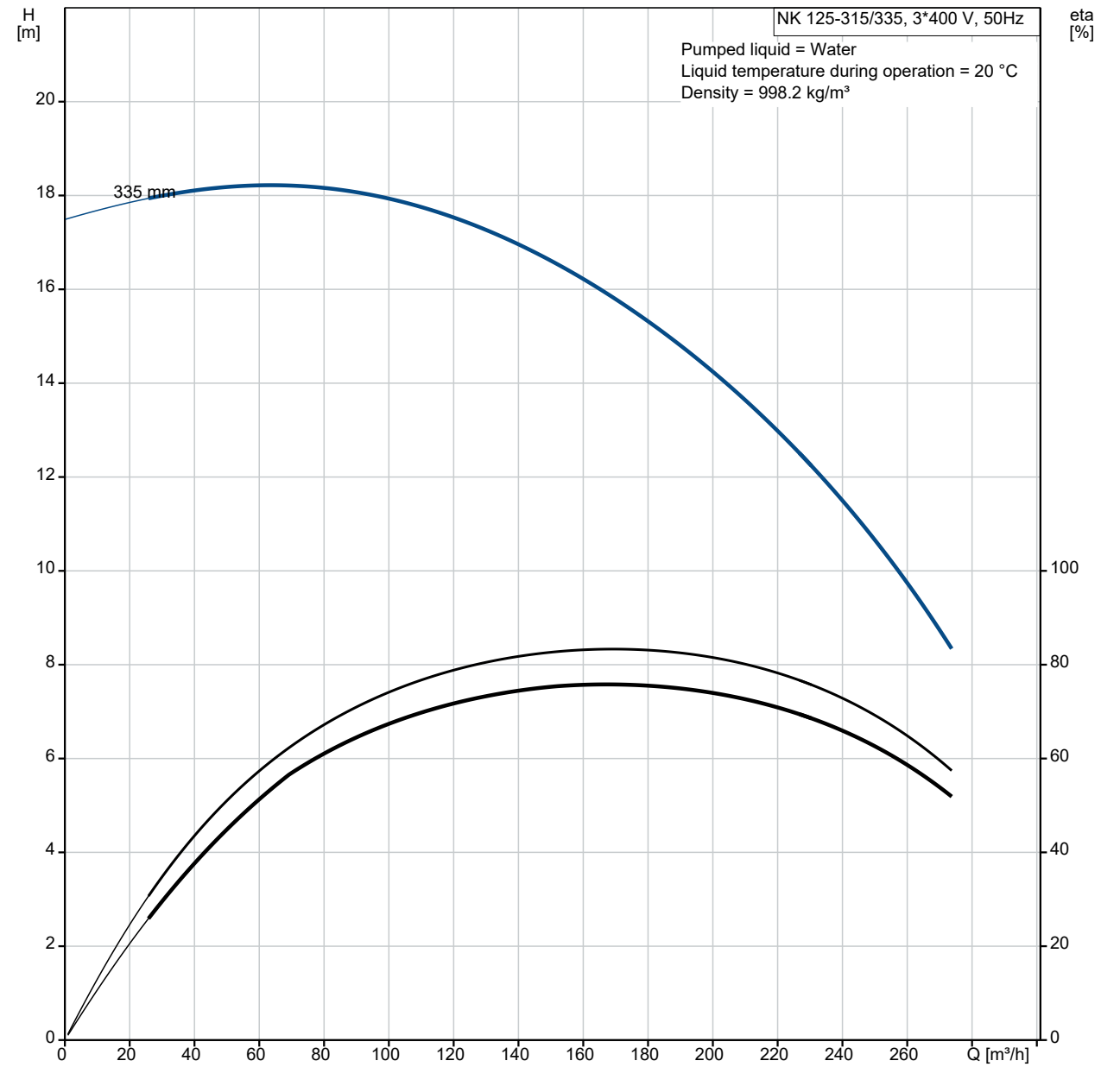

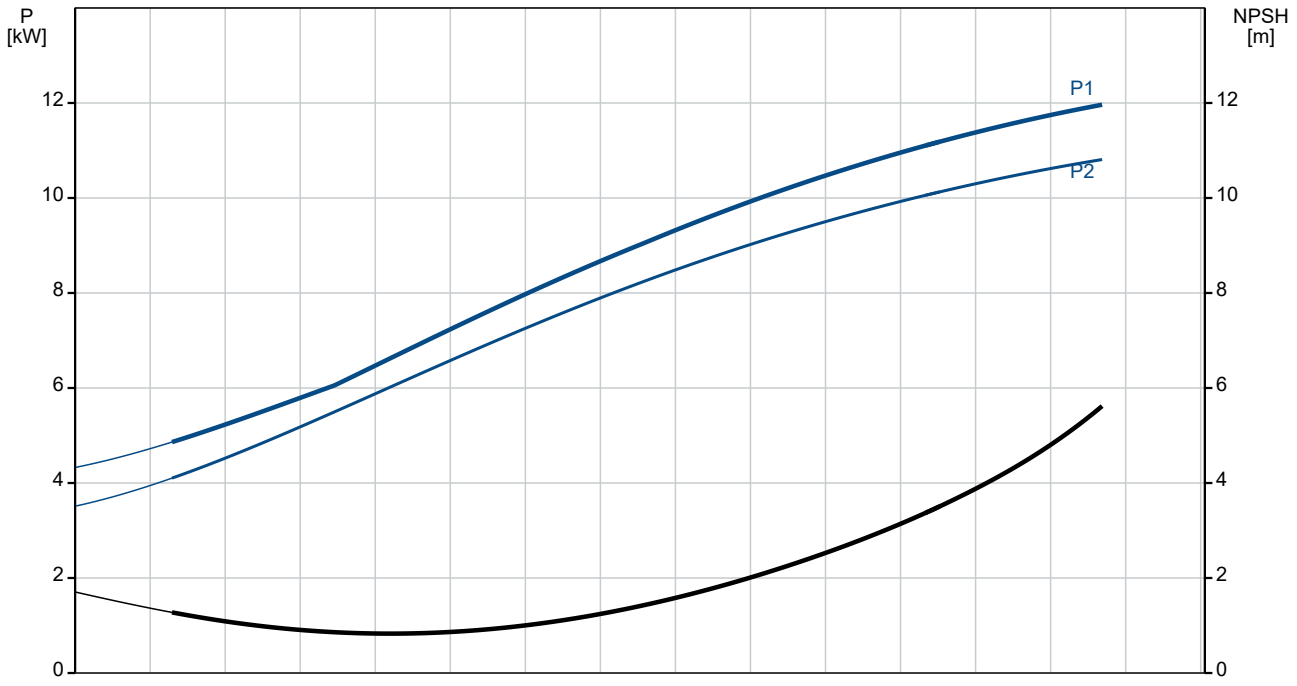

Description	Value
General information:	
Product name:	NK 125-315/335 A2F2AE-SBQQE
Product No:	98972435
EAN number:	5712604485231
Technical:	
Pump speed on which pump data are based:	975 rpm
Rated flow:	168.6 m³/h
Pump with motor:	Y
Rated head:	15.66 m
Actual impeller diameter:	335 mm
Nominal impeller diameter:	315
Shaft diameter:	42 mm
Code for shaft seal:	BQQE
Curve tolerance:	ISO9906:2012 3B
Pump version:	A2
Bearing design:	Standard
Materials:	
Pump housing:	Cast iron
Pump housing:	EN-GJL-250
Pump housing:	ASTM class 35
Wear ring:	Brass
Impeller:	Cast iron
Impeller:	EN-GJL-200
Impeller:	ASTM class 30
Shaft:	Stainless steel
Shaft:	EN 1.4301
Shaft:	AISI 304
Internal pump house coating:	CED
Material code:	A
Code for rubber:	E
Installation:	
Maximum ambient temperature:	55 °C
Maximum operating pressure:	16 bar
Pipe connection standard:	EN 1092-2
Type of inlet connection:	DIN
Type of outlet connection:	DIN
Size of inlet connection:	DN 150
Size of outlet connection:	DN 125
Pressure rating for connection:	PN 16
Coupling type:	Flexible w/spacer
Base frame design:	EN/ISO
Grouting:	N
Connect code:	F
Liquid:	
Pumped liquid:	Water
Liquid temperature range:	-25 .. 120 °C
Selected liquid temperature:	20 °C
Density:	998.2 kg/m³
Electrical data:	
Motor type:	SIEMENS
IE Efficiency class:	IE3
Rated power - P2:	11 kW
Mains frequency:	50 Hz
Rated voltage:	3 x 380-420D/660-725Y V
Rated current:	23,2-21,0/13,4-12,2 A
Starting current:	660-660 %
Cos phi - power factor:	0.80
Rated speed:	975 rpm
Efficiency:	IE3 90,3%
Motor efficiency at full load:	90.3-90.3 %
Motor efficiency at 3/4 load:	91.1-91.1 %
Motor efficiency at 1/2 load:	90.8-90.8 %

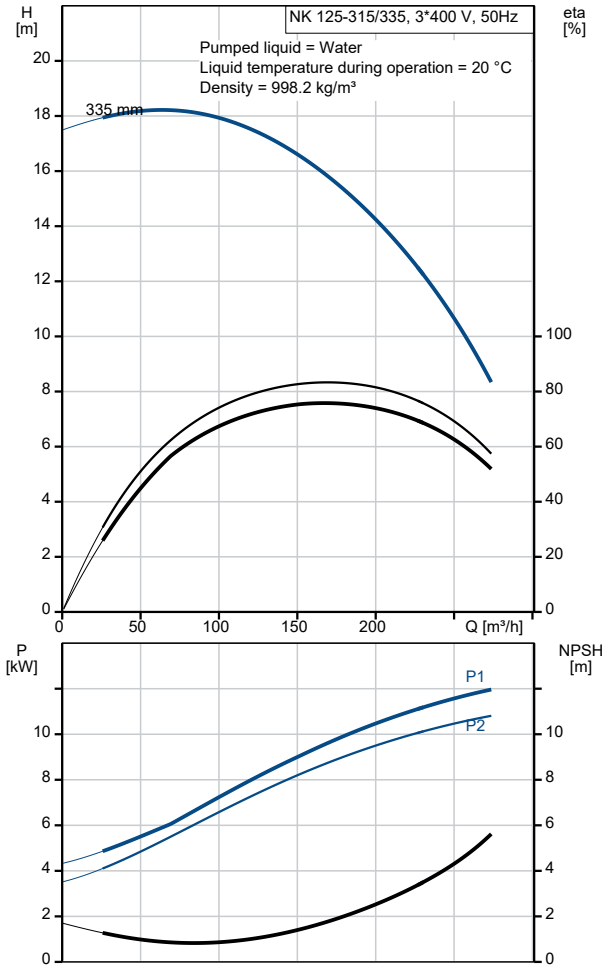

Description	Value
Number of poles:	6
Enclosure class (IEC 34-5):	IP55
Insulation class (IEC 85):	F
Motor protec:	PTC
Motor No:	98957460
Controls:	
Frequency converter:	NONE
Pressure sensor:	N
Others:	
Minimum efficiency index, MEI ≥:	0.70
Net weight:	475 kg
Gross weight:	542 kg
Shipping volume:	1.49 m³
Country of origin:	HU
Custom tariff no.:	84137059

98972435 NK 125-315/335 A2F2AE-SBQQE 50 Hz

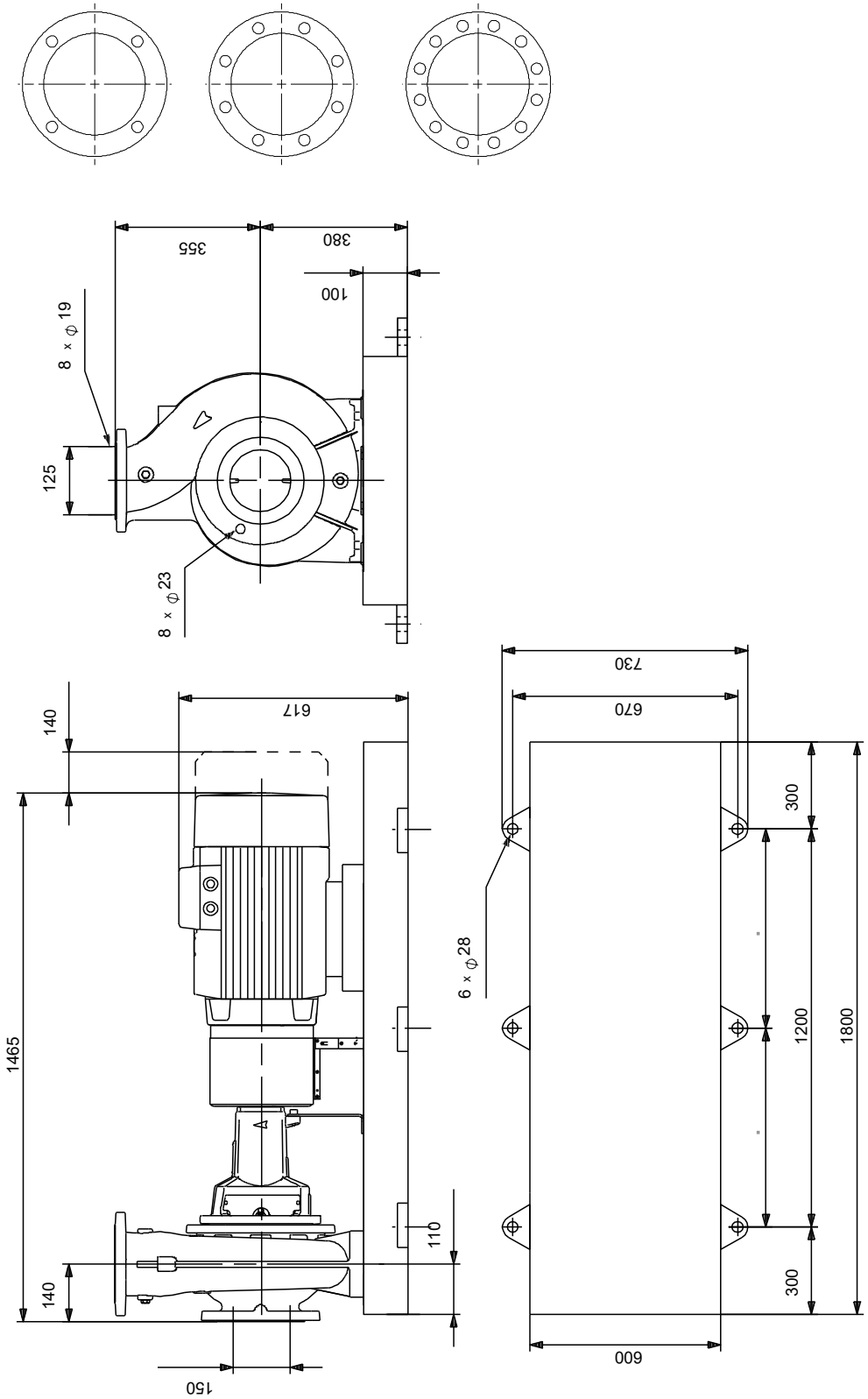

Note! All units are in [mm] unless others are stated.
Disclaimer: This simplified dimensional drawing does not show all details.

Spare parts NK 125-315/335, Product No. 98972435
Produced After 1010 (production year and week number)

Pos	Omschrijving	Opmerking tekst	Classificatie Gegevens	Onderdeelnr.	Aantal	Eenheid
-	Kit, bearing			95919874	1	pcs
53a	O-ring		Diameter: 3		1	
			Thickness: 109,5			
53	Ball bearing				1	
54a	O-ring		Diameter: 3		1	
			Thickness: 109,5			
54	Ball bearing				1	
99	Retaining ring				2	
156a	Bearing cover				2	
159a	V-ring				2	
-	Kit, bearing bracket			96935044	1	pcs
7.k	Hex socket head cap screw		Length (mm): 10		4	
			Thread: M6			
36.a	Nut				10	
76a	Rivet				2	
86	Bearing bracket				1	
90.e	Hex head screw		Length (mm): 25		1	
			Thread: M12			
124d	Shaft guard				1	
124d	Shaft guard				1	
124.d	Pan head screw				4	
-	Kit, coupling			96861609	1	pcs
- 7	Coupling cpl.				1	
89s	Spacer ring					1
89r	Spacer sleeve					1
89o	Coupling part spacer side					1
89.p	Coupling female					1
89.c	Hex socket head cap screw		Length (mm): 16			6
			Thread: M6			
89.b	Socket set screw		Length (mm): 8			1
			Thread: M6			
89	Rubber blocks for coupling					6
11.a	Parallel key				1	
-	Kit, coupling guard			98078804	1	pcs
7b	Hex socket head cap screw		Length (mm): 10		4	
			Thread: M6			
7b	Retainer for coupling guard				1	
- 7	Coupling guard cpl.				1	
7e	Hex socket head cap screw					3
7c	Spacer f/coupling guard					1
7	Guard					1
94	Lock nut		Thread: M6			2
-	Kit, cover			96927320	1	pcs
18	Plug				1	
36	Nut		Thread: M12		10	
77	Cover f/mech. seal				1	
-	Kit, foot for bearing bracket			96909494	1	pcs
	Nut		Thread: M12		2	
66	Washer				2	
90.e	Hex head screw		Length (mm): 25		1	
			Thread: M12			
90.d	Hex head bolt		Length (mm): 110		2	
			Thread: M12			
90.d	Hex head bolt		Length (mm): 70		2	
			Thread: M12			
90.d	Hex head screw		Length (mm): 30		2	
			Thread: M12			
90.c	Foot				1	
-	Kit, foot for coupling guard			96848500	1	pcs

Pos	Omschrijving	Opmerking tekst	Classificatie Gegevens	Onderdeelnr.	Aantal	Eenheid
7h	Hex head screw		Length (mm): 16		2	
			Thread: M8			
- 7.d	Foot cpl.				1	
7l	Support f/coupling guard foot					1
7h	Hex socket head cap screw					2
7d	Foot for coupling guard					1
66	Washer					2
66	Washer				2	
-	Kit, nut			96939132	1	pcs
11	Key				1	
- 36	Nut				1	
66a	Spring lock washer					1
66	Washer					1
67	Nut		Thread: M24			1
-	Kit, pump housing			96930837	1	pcs
6	Pump housing				1	
20	Plug				2	
36	Nut		Thread: M12		14	
-	Kit, rubber blocks f. coupling			96480016	1	pcs
89	Rubber blocks for coupling				6	
-	Kit, shaft			96861522	1	pcs
11.a	Parallel key				1	
11	Key				1	
51	Shaft				1	
66a	Spring lock washer				1	
66	Washer				1	
67	Nut		Thread: M24		1	
-	Kit, shaft cover			96809961	1	pcs
124d	Shaft guard				1	
124d	Shaft guard				1	
124.d	Pan head screw				4	
-	Spare, wear ring			96810109	1	pcs
45	Wear ring				1	
-	Spare, wear ring			96797628	1	pcs
45	Wear ring				1	
-	V-ring			96871240	1	pcs
159a	V-ring				2	
-	Motor				1	pcs
153	Ball bearing			96485755	1	
111	Ball bearing			96485755	1	
158	Corrugated spring			96764562	1	
151	Fan cover			96775930	1	
156.b	Flange			96831020	1	
156.a	Flange			96831021	1	
191	Foot			96609541	1	
192	Foot			96609542	1	
156	Kit, fan			98505756	1	
151	Spare, motor fan cover			98507838	1	
164a	Spare, Terminal box			98505713	1	
176	Terminal board cpl.			96766053	1	
164	Terminal box cover			96766004	1	
159.b	V-ring			96767645	1	
7k	Hex socket head cap screw		Length (mm): 10	97506946	4	pcs
			Thread: M6			
28	Hex head screw		Length (mm): 25	99522923	1	pcs
			Thread: M12			
36	Nut		Thread: M12	96620479	14	pcs
49	Impeller			99479483	1	pcs
54a	O-ring		Diameter: 3	97511812	2	pcs
			Thickness: 109,5			
67	Nut		Thread: M25	92526532	1	pcs
72a	O-ring		Diameter: 329,79	92547632	1	pcs
			Material type: EPDM			
			Thickness: 3,53			

Pos	Omschrijving	Opmerking tekst	Classificatie Gegevens	Onderdeelnr.	Aantal	Eenheid
72a	O-ring		Diameter: 329,79	92526511	1	pcs
			Material type: EPDM			
			Thickness: 3,53			
72a	O-ring		Diameter: 329,79	97511846	1	pcs
			Material type: EPDM			
			Thickness: 3,53			
72a	O-ring		Diameter: 329,79	97757675	1	pcs
			Material type: EPDM			
			Thickness: 3,53			
77a	Pan head screw			99266550	4	pcs
86	Bearing bracket			99081097	1	pcs
99	Retaining ring			99415814	2	pcs
156a	Bearing cover			97506939	2	pcs