# Inventflow: Grundfos A-partner

## Grundfos NK 65-315/272 A2F2AE-SBQQE

Find the pump here:
https://inventflow.nl/en/pompenfilter/nk/grundfos-nk-65-315-272-a2f2ae-sbqqe

### Contact

info@inventflow.nl
+31 (0) 546 45 80 72

### Datasheet

| Qty. | Description |
|---|---|
| 1 | **NK 65-315/272 A2F2AE-SBQQE** |

**Note! Product picture may differ from actual product**

Product No.: 98972834

Non-self priming, single-stage centrifugal
Flange standard: pump according to EN 1092-2.

The pump is for the pumping of thin, clean or
slightly contaminated
liquids without abrasive or long-fibred
solids.

Phase: Pump and 3-phase AC motor are mounted
as separate units on a common baseplate and

The impeller is hydraulically as well as
dynamically balanced.

The pump has the following characteristics:
- flange dimensions according to
EN 1092-2,

Pump housing: - Cast iron volute
pump housing,
- stainless steel shaft

Impeller: and Cast iron impeller
and bronze wear rings,
- unbalanced mechanical shaft seal
according to EN 12756.

Controls:
Frequency converter: NONE
Pressure sensor: N

Liquid:
Pumped liquid: Water
Liquid temperature range: -25 .. 120 °C
Selected liquid temperature: 20 °C
Density: 998.2 kg/m³

Technical:
Pump speed on which pump data are based: 2975 rpm
Rated flow: 144.1 m³/h
Pump with motor: Y
Rated head: 92.08 m
Actual impeller diameter: 272 mm
Nominal impeller diameter: 315
Code for shaft seal: BQQE
Curve tolerance: ISO9906:2012 3B
Bearing design: Standard

Materials:
Pump housing: Cast iron
EN-GJL-250
ASTM class 35
Wear ring: Brass
Impeller: Cast iron
EN-GJL-200

| Qty. | Description | |
|---|---|---|
| | | ASTM class 30 |
| | Shaft: | Stainless steel |
| | | EN 1.4301 |
| | | AISI 304 |
| | Internal pump house coating: | CED |
| | | |
| | Installation: | |
| | Maximum ambient temperature: | 55 °C |
| | Maximum operating pressure: | 16 bar |
| | Pipe connection standard: | EN 1092-2 |
| | Type of inlet connection: | DIN |
| | Type of outlet connection: | DIN |
| | Size of inlet connection: | DN 80 |
| | Size of outlet connection: | DN 65 |
| | Pressure rating for connection: | PN 16 |
| | Coupling type: | Flexible w/spacer |
| | Base frame design: | EN/ISO |
| | Grouting: | Y |
| | | |
| | Electrical data: | |
| | Motor type: | SIEMENS |
| | IE Efficiency class: | IE3 |
| | Rated power - P2: | 55 kW |
| | Mains frequency: | 50 Hz |
| | Rated voltage: | 3 x 380-420D/660-725Y V |
| | Rated current: | 99,0-92,0/57,0-53,0 A |
| | Starting current: | 670-670 % |
| | Cos phi - power factor: | 0.89 |
| | Rated speed: | 2975 rpm |
| | Efficiency: | IE3 94,3% |
| | Motor efficiency at full load: | 94.3-94.3 % |
| | Motor efficiency at 3/4 load: | 94.5-94.5 % |
| | Motor efficiency at 1/2 load: | 93.9-93.9 % |
| | Number of poles: | 2 |
| | Enclosure class (IEC 34-5): | IP55 |
| | Insulation class (IEC 85): | F |
| | Motor No: | 98943375 |
| | | |
| | Others: | |
| | Minimum efficiency index, MEI ≥: | 0.65 |
| | Net weight: | 675 kg |
| | Gross weight: | 766 kg |
| | Shipping volume: | 1.88 m³ |
| | Country of origin: | HU |
| | Custom tariff no.: | 84137059 |

# 98972834 NK 65-315/272 A2F2AE-SBQQE 50 Hz

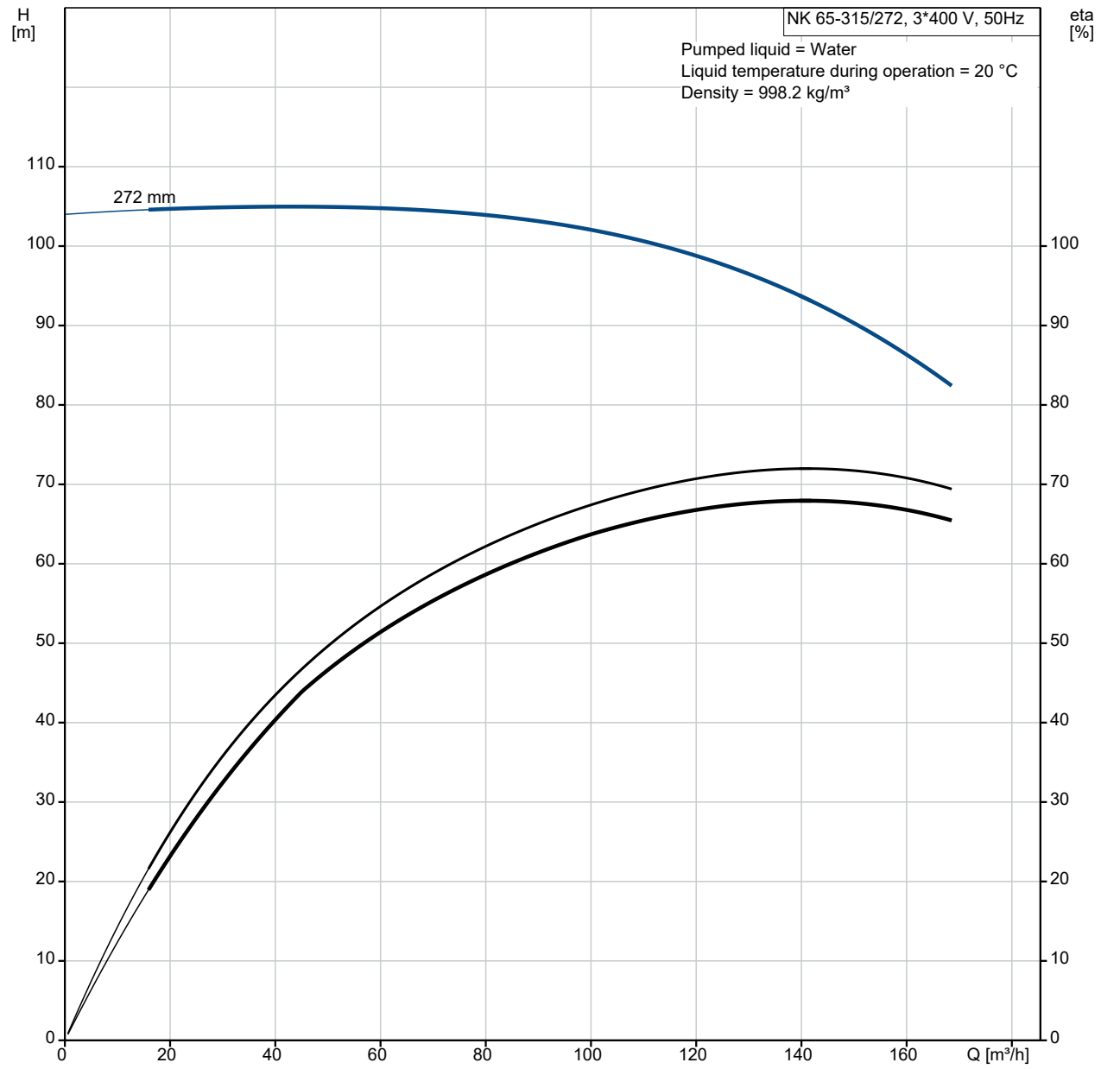


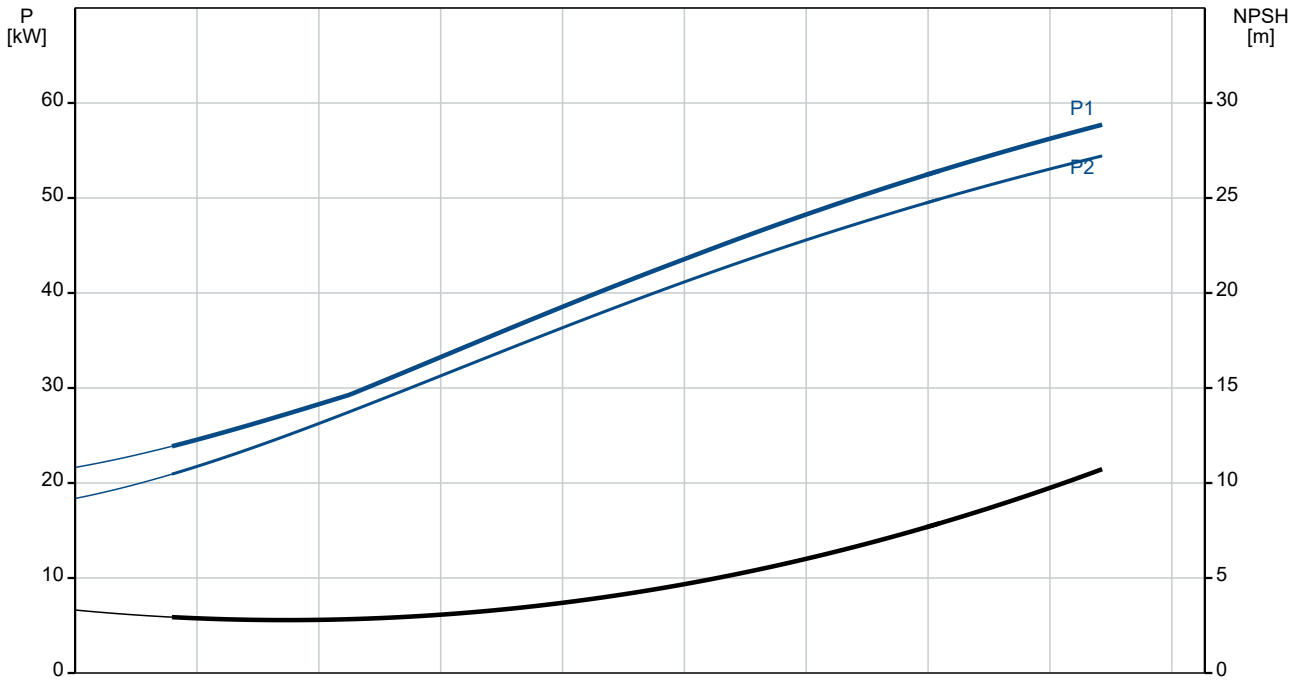

| Description | Value |
|---|---|
| **General information:** | |
| Product name: | NK 65-315/272 A2F2AE-SBQQE |
| Product No: | 98972834 |
| EAN number: | 5712604493199 |
| **Technical:** | |
| Pump speed on which pump data are based: | 2975 rpm |
| Rated flow: | 144.1 m³/h |
| Pump with motor: | Y |
| Rated head: | 92.08 m |
| Actual impeller diameter: | 272 mm |
| Nominal impeller diameter: | 315 |
| Shaft diameter: | 32 mm |
| Code for shaft seal: | BQQE |
| Curve tolerance: | ISO9906:2012 3B |
| Pump version: | A2 |
| Bearing design: | Standard |
| **Materials:** | |
| Pump housing: | Cast iron |
| Pump housing: | EN-GJL-250 |
| Pump housing: | ASTM class 35 |
| Wear ring: | Brass |
| Impeller: | Cast iron |
| Impeller: | EN-GJL-200 |
| Impeller: | ASTM class 30 |
| Shaft: | Stainless steel |
| Shaft: | EN 1.4301 |
| Shaft: | AISI 304 |
| Internal pump house coating: | CED |
| Material code: | A |
| Code for rubber: | E |
| **Installation:** | |
| Maximum ambient temperature: | 55 °C |
| Maximum operating pressure: | 16 bar |
| Pipe connection standard: | EN 1092-2 |
| Type of inlet connection: | DIN |
| Type of outlet connection: | DIN |
| Size of inlet connection: | DN 80 |
| Size of outlet connection: | DN 65 |
| Pressure rating for connection: | PN 16 |
| Coupling type: | Flexible w/spacer |
| Base frame design: | EN/ISO |
| Grouting: | Y |
| Connect code: | F |
| **Liquid:** | |
| Pumped liquid: | Water |
| Liquid temperature range: | -25 .. 120 °C |
| Selected liquid temperature: | 20 °C |
| Density: | 998.2 kg/m³ |
| **Electrical data:** | |
| Motor type: | SIEMENS |
| IE Efficiency class: | IE3 |
| Rated power - P2: | 55 kW |
| Mains frequency: | 50 Hz |
| Rated voltage: | 3 x 380-420D/660-725Y V |
| Rated current: | 99,0-92,0/57,0-53,0 A |
| Starting current: | 670-670 % |
| Cos phi - power factor: | 0.89 |
| Rated speed: | 2975 rpm |
| Efficiency: | IE3 94,3% |
| Motor efficiency at full load: | 94.3-94.3 % |
| Motor efficiency at 3/4 load: | 94.5-94.5 % |
| Motor efficiency at 1/2 load: | 93.9-93.9 % |

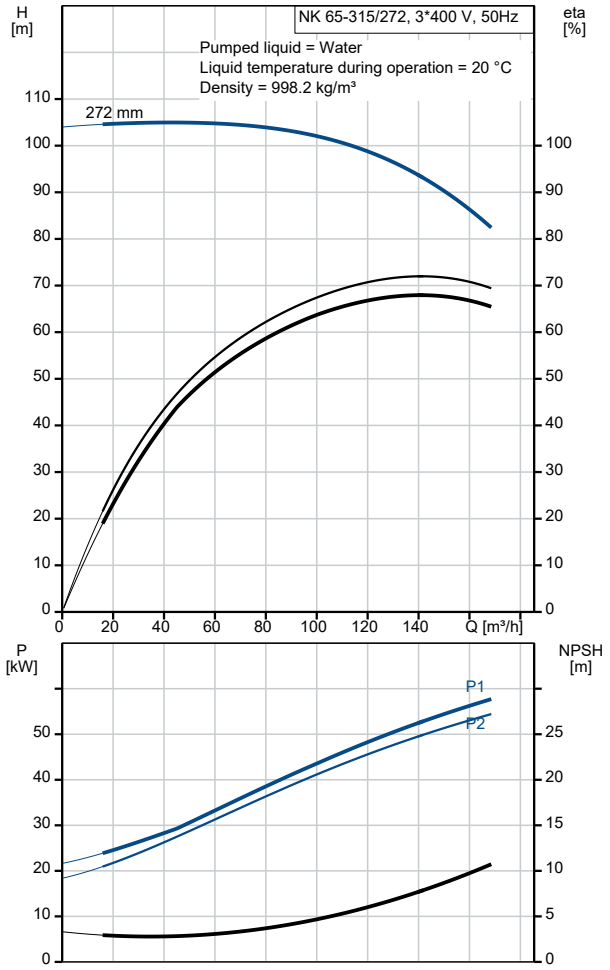

| Description | Value |
|---|---|
| Number of poles: | 2 |
| Enclosure class (IEC 34-5): | IP55 |
| Insulation class (IEC 85): | F |
| Motor protec: | PTC |
| Motor No: | 98943375 |
| **Controls:** | |
| Frequency converter: | NONE |
| Pressure sensor: | N |
| **Others:** | |
| Minimum efficiency index, MEI ≥: | 0.65 |
| Net weight: | 675 kg |
| Gross weight: | 766 kg |
| Shipping volume: | 1.88 $m^3$ |
| Country of origin: | HU |
| Custom tariff no.: | 84137059 |

# 98972834 NK 65-315/272 A2F2AE-SBQQE 50 Hz

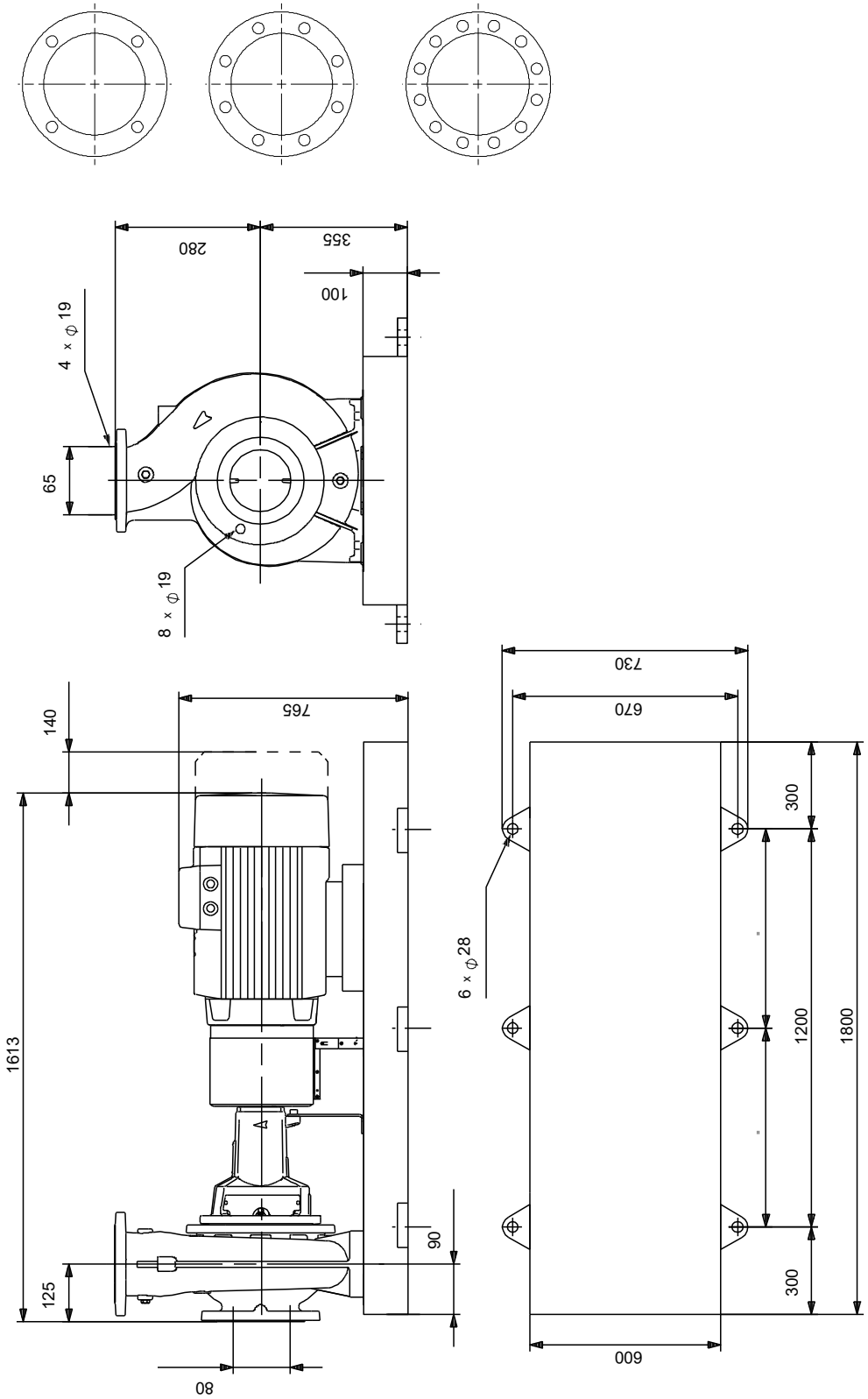


Note! All units are in [mm] unless others are stated.
Disclaimer: This simplified dimensional drawing does not show all details.

# Spare parts NK 65-315/272, Product No. 98972834
# Produced After 1010 (production year and week number)

| Pos | Omschrijving | Opmerking tekst | Classificatie Gegevens | Onderdeelnr. | Aantal | Eenheid |
|---|---|---|---|---|---|---|
| - | Kit, bearing | | | 96579599 | 1 | pcs |
| 111 | Ball bearing | | | 96607904 | 1 | |
| 53 | Ball bearing | | | 96607904 | 1 | |
| 53.a | O-ring | | Diameter: 89,5 | | 1 | |
| | | | Material type: EPDM | | | |
| | | | Thickness: 3 | | | |
| 109 | O-ring | | Diameter: 89,5 | | 1 | |
| | | | Material type: EPDM | | | |
| | | | Thickness: 3 | | | |
| 156a | Bearing cover | | | | 2 | |
| 159f | Retaining ring | | | | 2 | |
| 159a | V-ring | | | | 2 | |
| - | Kit, bearing bracket | | | 95131794 | 1 | pcs |
| 7.k | Hex socket head cap screw | | Length (mm): 10 | | 4 | |
| | | | Thread: M6 | | | |
| 36.a | Nut | | Thread: M10 | | 6 | |
| 76a | Rivet | | | | 2 | |
| 86 | Bearing bracket | | | | 1 | |
| 124d | Shaft guard | | | | 1 | |
| 124d | Shaft guard | | | | 1 | |
| 124.d | Pan head screw | | | | 4 | |
| - | Kit, coupling | | | 96579805 | 1 | pcs |
| - 8 | Coupling cpl. | | | | 1 | |
| 89s | Spacer ring | | | | | 1 |
| 89r | Spacer sleeve | | | | | 1 |
| 89o | Coupling part spacer side | | | | | 1 |
| 89.p | Coupling female | | | | | 1 |
| 89.d | Hex socket head cap screw | | | | | 6 |
| 89.a | Socket set screw | | Length (mm): 10 | | | 1 |
| | | | Thread: M8 | | | |
| 89 | Rubber blocks for coupling | | | | | 6 |
| 11.a | Parallel key | | | | 1 | |
| - | Kit, coupling guard | | | 98078802 | 1 | pcs |
| 7b | Hex socket head cap screw | | Length (mm): 10 | | 4 | |
| | | | Thread: M6 | | | |
| 7b | Retainer for coupling guard | | | | 1 | |
| - 7 | Coupling guard cpl. | | | | 1 | |
| 7e | Hex socket head cap screw | | | | | 3 |
| 7c | Spacer f/coupling guard | | | | | 1 |
| 7 | Guard | | | | | 1 |
| 94 | Lock nut | | Thread: M6 | | | 2 |
| - | Kit, cover | | | 95131792 | 1 | pcs |
| 18 | Plug | | | | 1 | |
| 36 | Nut | | Thread: M12 | | 14 | |
| 36 | Nut | | Thread: M10 | | 8 | |
| - 77 | Cover f/mech. seal | | | | 1 | |
| | Cover f/mech. seal | | | | | 1 |
| 26.a | Staybolt | | Length (mm): 35 | | | 8 |
| | | | Thread: M10 | | | |
| 45 | Wear ring | | | | | 1 |
| - | Kit, foot for bearing bracket | | | 96909172 | 1 | pcs |
| | Nut | | Thread: M12 | | 2 | |
| 66 | Washer | | | | 2 | |
| 90.e | Hex head screw | | Length (mm): 25 | | 1 | |
| | | | Thread: M12 | | | |
| 90.d | Hex head bolt | | Length (mm): 100 | | 2 | |
| | | | Thread: M12 | | | |
| 90.d | Hex head bolt | | Length (mm): 80 | | 2 | |
| | | | Thread: M12 | | | |

| Pos | Omschrijving | Opmerking tekst | Classificatie Gegevens | Onderdeelnr. | Aantal | Eenheid |
|---|---|---|---|---|---|---|
| 90.d | Hex head bolt | | Length (mm): 55 | | 2 | |
| | | | Thread: M12 | | | |
| 90.d | Hex socket head cap screw | | | | 2 | |
| 90.d | Hex head screw | | Length (mm): 35MM | | 2 | |
| | | | Thread: M12 | | | |
| 90.d | Hex head screw | | Length (mm): 40 | | 2 | |
| | | | Thread: M12 | | | |
| 90.d | Hex head screw | | Length (mm): 30 | | 2 | |
| | | | Thread: M12 | | | |
| 90.c | Foot | | | | 1 | |
| - | Kit, foot for coupling guard | | | 96848500 | 1 | pcs |
| 7h | Hex head screw | | Length (mm): 16 | | 2 | |
| | | | Thread: M8 | | | |
| - 7.d | Foot cpl. | | | | 1 | |
| 7l | Support f/coupling guard foot | | | | | 1 |
| 7h | Hex socket head cap screw | | | | | 2 |
| 7d | Foot for coupling guard | | | | | 1 |
| 66 | Washer | | | | | 2 |
| 66 | Washer | | | | 2 | |
| - | Kit, nut | | | 96939130 | 1 | pcs |
| 11 | Parallel key | | | | 1 | |
| - 36 | Nut | | | | 1 | |
| 66a | Spring lock washer | | | | | 1 |
| 66 | Washer | | | | | 1 |
| 67 | Nut | | Thread: M18 | | | 1 |
| - | Kit, pump housing | | | 95131727 | 1 | pcs |
| - 6 | Pump housing | | | | 1 | |
| 26 | Staybolt | | Length (mm): 40 | | | 14 |
| | | | Thread: M12 | | | |
| 45 | Wear ring | | | | | 1 |
| 20 | Pipe plug | | Thread: R 3/8 | | 2 | |
| 36 | Nut | | Thread: M12 | | 14 | |
| - | Kit, rubber blocks f. coupling | | | 96480019 | 1 | pcs |
| 89 | Rubber blocks for coupling | | | | 6 | |
| - | Kit, shaft | | | 96039655 | 1 | pcs |
| 11.a | Parallel key | | | | 1 | |
| 11 | Parallel key | | | | 1 | |
| 51 | Shaft | | | | 1 | |
| 66a | Spring lock washer | | | | 1 | |
| 66 | Washer | | | | 1 | |
| 67 | Nut | | Thread: M18 | | 1 | |
| - | Kit, shaft cover | | | 96809957 | 1 | pcs |
| 124d | Shaft guard | | | | 1 | |
| 124d | Shaft guard | | | | 1 | |
| 124.d | Pan head screw | | | | 4 | |
| - | Spare, wear ring | | | 96797628 | 1 | pcs |
| 45 | Wear ring | | | | 1 | |
| - | Spare, wear ring | | | 96810105 | 1 | pcs |
| 45 | Wear ring | | | | 1 | |
| - | V-ring | | | 96871238 | 1 | pcs |
| 159a | V-ring | | | | 2 | |
| - | Motor | | | | 1 | pcs |
| 156 | Fan | | | 96766619 | 1 | |
| 151 | Kit, fan cover | | | 98062277 | 1 | |
| 176 | Kit, terminal board | | | 98062239 | 1 | |
| 164a | Kit, terminal box | | | 98062264 | 1 | |
| 7k | Hex socket head cap screw | | Length (mm): 10 | 97506946 | 4 | pcs |
| | | | Thread: M6 | | | |
| 28 | Hex head screw | | Length (mm): 25 | 99522923 | 1 | pcs |
| | | | Thread: M12 | | | |
| 36 | Nut | | Thread: M12 | 96620479 | 14 | pcs |
| 49 | Impeller | | | 98680939 | 1 | pcs |
| 54 | Ball bearing | | | 98638919 | 2 | pcs |
| 67 | Nut | | Thread: M18 | 92526535 | 1 | pcs |

| Pos | Omschrijving | Opmerking tekst | Classificatie Gegevens | Onderdeelnr. | Aantal | Eenheid |
|---|---|---|---|---|---|---|
| 72a | O-ring | | Diameter: 329,79 | 92547632 | 1 | pcs |
| | | | Material type: EPDM | | | |
| | | | Thickness: 3,53 | | | |
| 72a | O-ring | | Diameter: 329,79 | 92526511 | 1 | pcs |
| | | | Material type: EPDM | | | |
| | | | Thickness: 3,53 | | | |
| 72a | O-ring | | Diameter: 329,79 | 97511846 | 1 | pcs |
| | | | Material type: EPDM | | | |
| | | | Thickness: 3,53 | | | |
| 72a | O-ring | | Diameter: 329,79 | 97757675 | 1 | pcs |
| | | | Material type: EPDM | | | |
| | | | Thickness: 3,53 | | | |
| 77a | Pan head screw | | | 99266550 | 4 | pcs |
| - 77 | Cover | | | 99437001 | 1 | pcs |
| 36 | Nut | | Thread: M10 | 96620484 | 8 | |
| 105b | Spacer | | | 96591277 | 1 | pcs |
| 109 | O-ring | | Diameter: 89,5 | 97511809 | 2 | pcs |
| | | | Material type: EPDM | | | |
| | | | Thickness: 3 | | | |
| 156a | Bearing cover | | | 97506937 | 2 | pcs |