POMPTECHNIEK • SERVICE • ONDERHOUD

Inventflow: Grundfos A-partner

Grundfos NKE 125-200/219 EUP A2F2AE-SBQQE

Find the pump here:
https://inventflow.nl/en/pompenfilter/nke/grundfos-nke-125-200-219-eup-a2f2ae-sbqqe

Contact

info@inventflow.nl
+31 (0) 546 45 80 72

Datasheet

Qty.	Description
1	**NKE 125-200/219 EUP A2F2AE-SBQQE**

Note! Product picture may differ from actual product

Product No.: 98973390

Non-self priming, single-stage centrifugal
Flange standard: pump according to EN 1092-2.

The pump is for the pumping of thin, clean or
slightly contaminated
liquids without abrasive or long-fibred
solids.

Phase: Pump and 3-phase AC motor are mounted
as separate units on a common baseplate and

The impeller is hydraulically as well as
dynamically balanced.

The pump has the following characteristics:
- flange dimensions according to
EN 1092-2,

Pump housing: - Cast iron volute
pump housing,
- stainless steel shaft

Impeller: and Cast iron impeller,
- unbalanced mechanical shaft seal
according to EN 12756.

The pump is fitted with an IEC-flanged three-phase
MGE motor with frequency converter and
PI-controller integrated in the motor terminal box.
No additional motor protection is required as both
motor and electronics are protected by integrated
overload and temperature protection.

An external sensor can be connected if controlled
pump operation based on for example flow,
differential pressure or temperature is required.

A control panel enables setting of required
setpoint as well as setting of pump to MIN or MAX
operation or to STOP. The control panel has
indicator lights for "Operation" and "Fault".

Communication with the pump is possible by means
of Grundfos R100 Remote Control enabling further
settings as well as reading out of a number of
parameters such as "Actual value", "Speed",
"Power input" and total "Power consumption".

The terminal box holds terminals for the
connection of:
- pump start/stop (potential-free contact),
- external remote setpoint setting via analog
signal, 0 - 5 V, 0 - 10 V, 0(4) - 20 mA,
- 5 V voltage supply for setpoint potentiometer,

Qty.	Description

Imax = 5 mA,
- sensor, 0 - 5 V, 0 - 10 V, 0(4) - 20 mA,
- 24 V voltage supply for sensor, Imax = 40 mA,
- input for forced control to MIN or MAX (potential-free contact),
- potential-free fault signal relay with changeover contact,
- RS485 GENIbus.

Controls:

Frequency converter:	Built-in
Pressure sensor:	N

Liquid:

Pumped liquid:	Water
Liquid temperature range:	-25 .. 120 °C
Selected liquid temperature:	20 °C
Density:	998.2 kg/m³

Technical:

Pump speed on which pump data are based:	1460 rpm
Rated flow:	257.8 m³/h
Pump with motor:	Y
Rated head:	12.07 m
Actual impeller diameter:	219 mm
Nominal impeller diameter:	200
Code for shaft seal:	BQQE
Curve tolerance:	ISO9906:2012 3B
Bearing design:	Standard

Materials:

Pump housing:	Cast iron EN-GJL-250 ASTM class 35
Wear ring:	Brass
Impeller:	Cast iron EN-GJL-200 ASTM class 30
Shaft:	Stainless steel EN 1.4301 AISI 304
Internal pump house coating:	CED

Installation:

Maximum ambient temperature:	40 °C
Maximum operating pressure:	16 bar
Pipe connection standard:	EN 1092-2
Type of inlet connection:	DIN
Type of outlet connection:	DIN
Size of inlet connection:	DN 150
Size of outlet connection:	DN 125
Pressure rating for connection:	PN 16
Coupling type:	Flexible w/spacer
Base frame design:	EN/ISO
Grouting:	N

Electrical data:

Motor type:	160LB
IE Efficiency class:	IE3
Rated power - P2:	11 kW
Mains frequency:	50 Hz
Rated voltage:	3 x 380-480 V
Rated current:	22.0-17.8 A
Cos phi - power factor:	0.91-0.90
Rated speed:	240-1750 rpm

Qty.	Description	
	Efficiency:	IE3 91,4%
	Motor efficiency at full load:	91.4 %
	Number of poles:	4
	Enclosure class (IEC 34-5):	IP55
	Insulation class (IEC 85):	F
	Motor No:	86906221
	Others:	
	Minimum efficiency index, MEI ≥:	0.70
	Net weight:	364 kg
	Gross weight:	391 kg
	Shipping volume:	0.801 m³
	Country of origin:	HU
	Custom tariff no.:	84137059

98973390 NKE 125-200/219 EUP A2F2AE-SBQQE 50 Hz

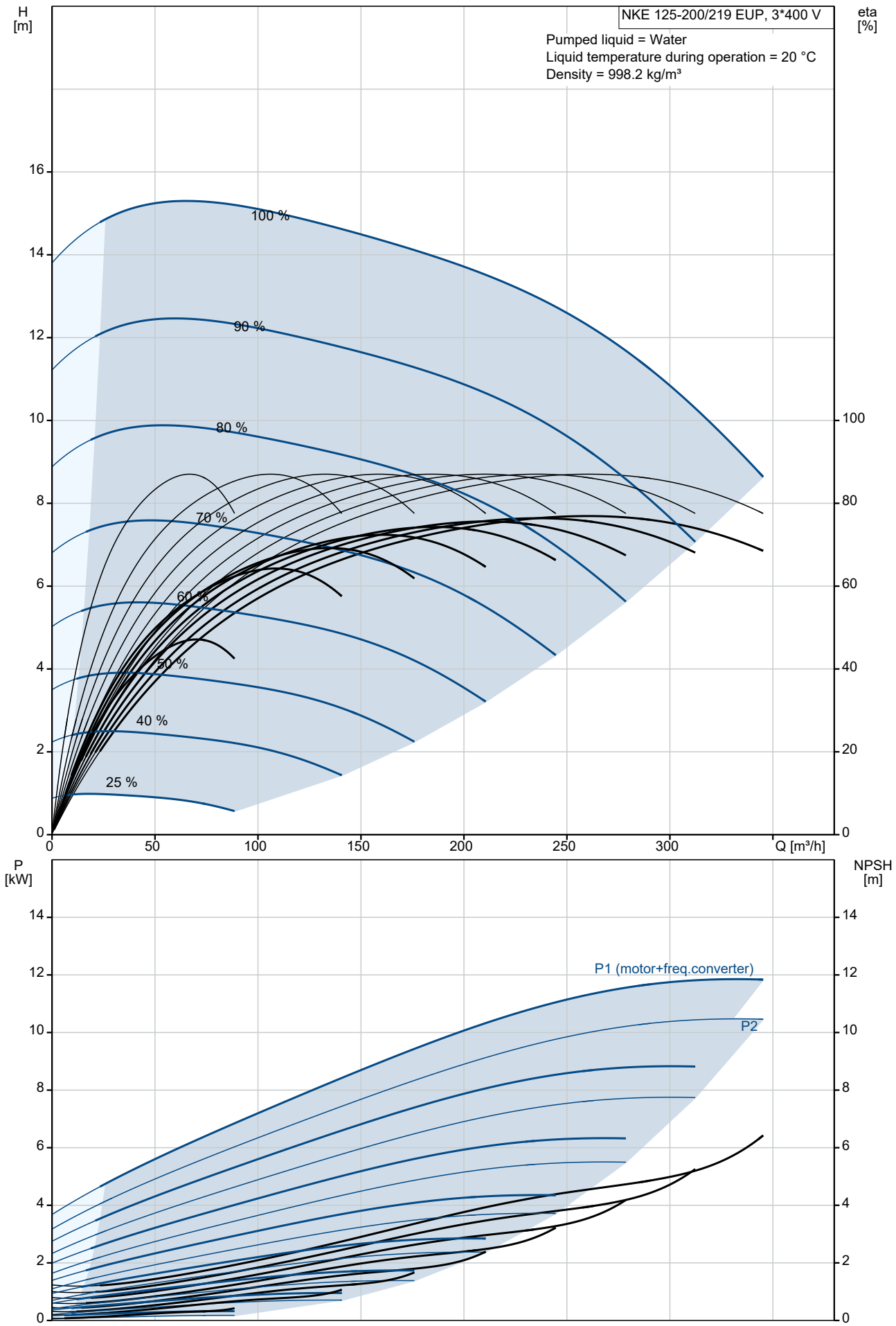

Description	Value
General information:	
Product name:	NKE 125-200/219 EUP A2F2AE-SBQQE
Product No:	98973390
EAN number:	5712604504284
Technical:	
Pump speed on which pump data are based:	1460 rpm
Rated flow:	257.8 m³/h
Pump with motor:	Y
Rated head:	12.07 m
Actual impeller diameter:	219 mm
Nominal impeller diameter:	200
Shaft diameter:	32 mm
Code for shaft seal:	BQQE
Curve tolerance:	ISO9906:2012 3B
Pump version:	A2
Bearing design:	Standard
Materials:	
Pump housing:	Cast iron
Pump housing:	EN-GJL-250
Pump housing:	ASTM class 35
Wear ring:	Brass
Impeller:	Cast iron
Impeller:	EN-GJL-200
Impeller:	ASTM class 30
Shaft:	Stainless steel
Shaft:	EN 1.4301
Shaft:	AISI 304
Internal pump house coating:	CED
Material code:	A
Code for rubber:	E
Installation:	
Maximum ambient temperature:	40 °C
Maximum operating pressure:	16 bar
Pipe connection standard:	EN 1092-2
Type of inlet connection:	DIN
Type of outlet connection:	DIN
Size of inlet connection:	DN 150
Size of outlet connection:	DN 125
Pressure rating for connection:	PN 16
Coupling type:	Flexible w/spacer
Base frame design:	EN/ISO
Grouting:	N
Connect code:	F
Liquid:	
Pumped liquid:	Water
Liquid temperature range:	-25 .. 120 °C
Selected liquid temperature:	20 °C
Density:	998.2 kg/m³
Electrical data:	
Motor type:	160LB
IE Efficiency class:	IE3
Rated power - P2:	11 kW
Mains frequency:	50 Hz
Rated voltage:	3 x 380-480 V
Rated current:	22.0-17.8 A
Cos phi - power factor:	0.91-0.90
Rated speed:	240-1750 rpm
Efficiency:	IE3 91,4%
Motor efficiency at full load:	91.4 %
Number of poles:	4
Enclosure class (IEC 34-5):	IP55
Insulation class (IEC 85):	F

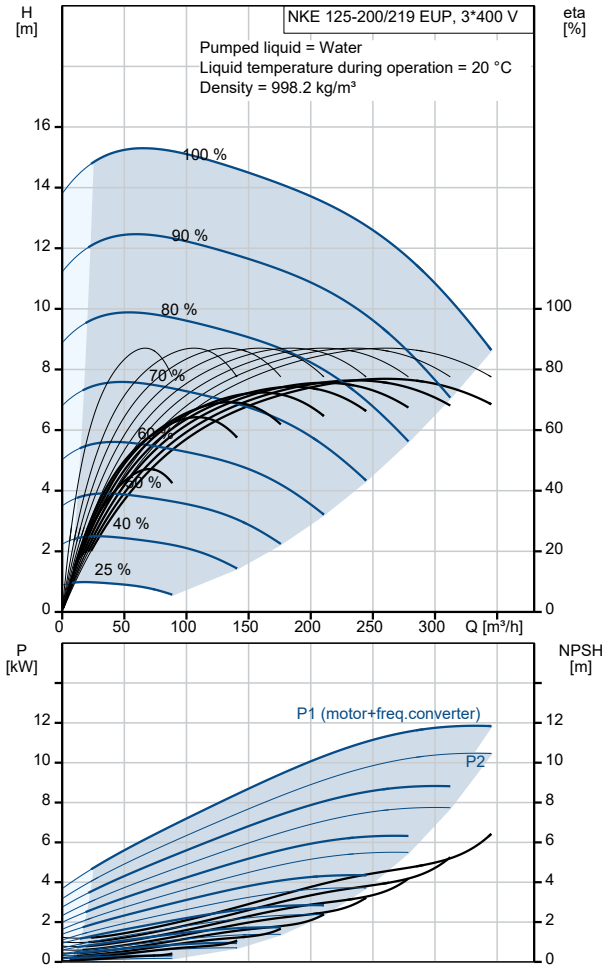

Description	Value
Motor protec:	YES
Motor No:	86906221
Controls:	
Control panel:	Standard
Function Module:	PUMP I/O
Frequency converter:	Built-in
Pressure sensor:	N
Others:	
Minimum efficiency index, MEI ≥:	0.70
Net weight:	364 kg
Gross weight:	391 kg
Shipping volume:	0.801 m^3
Country of origin:	HU
Custom tariff no.:	84137059

98973390 NKE 125-200/219 EUP A2F2AE-SBQQE 50 Hz

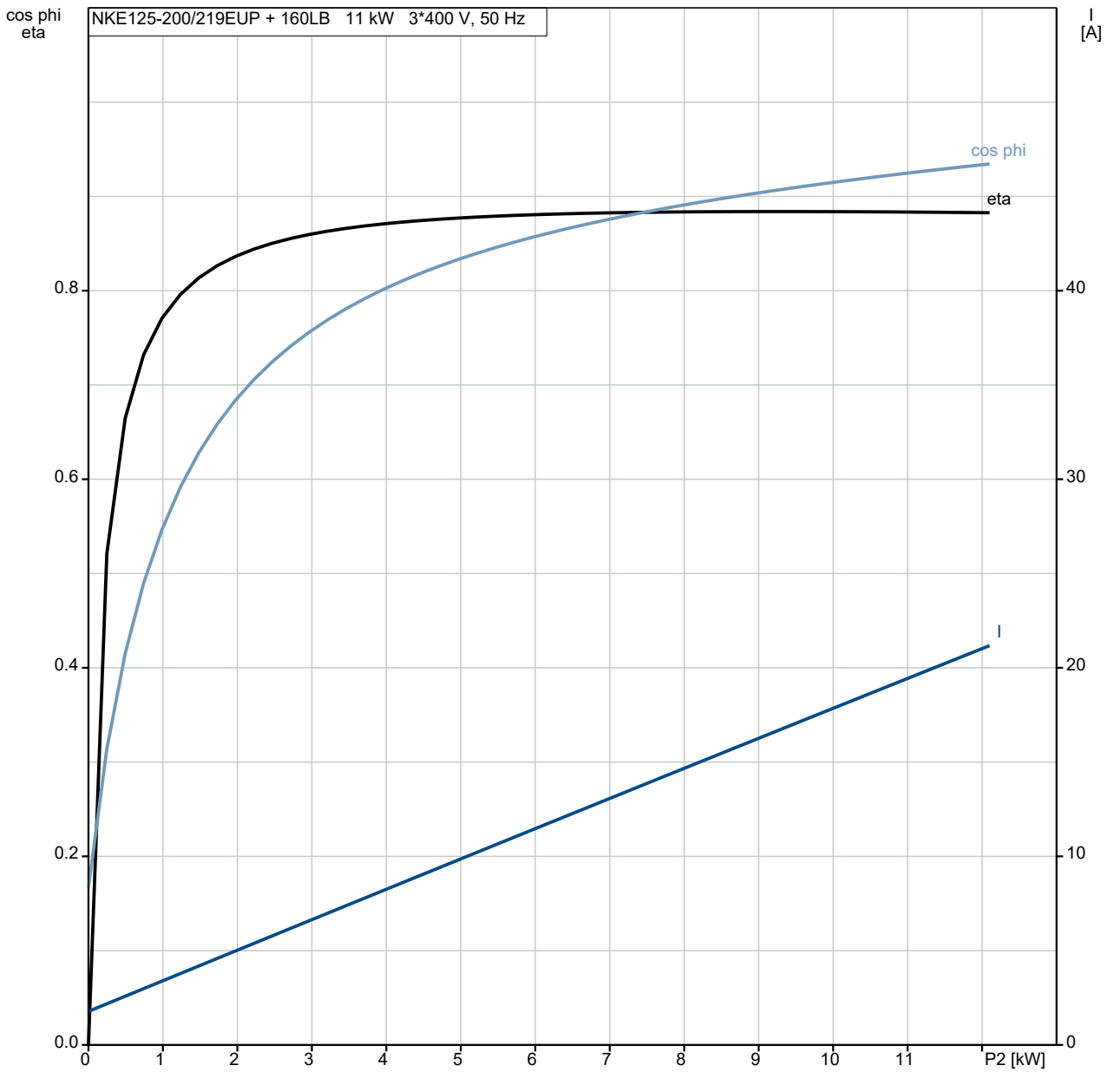

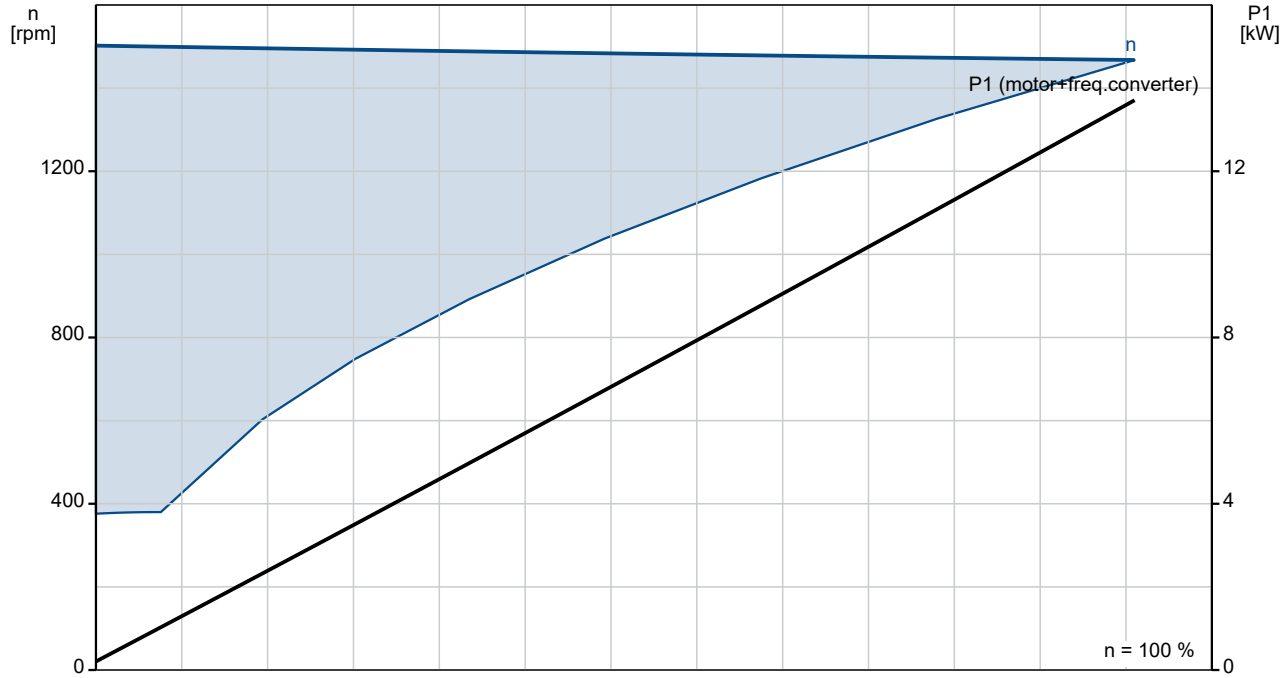

98973390 NKE 125-200/219 EUP A2F2AE-SBQQE 50 Hz

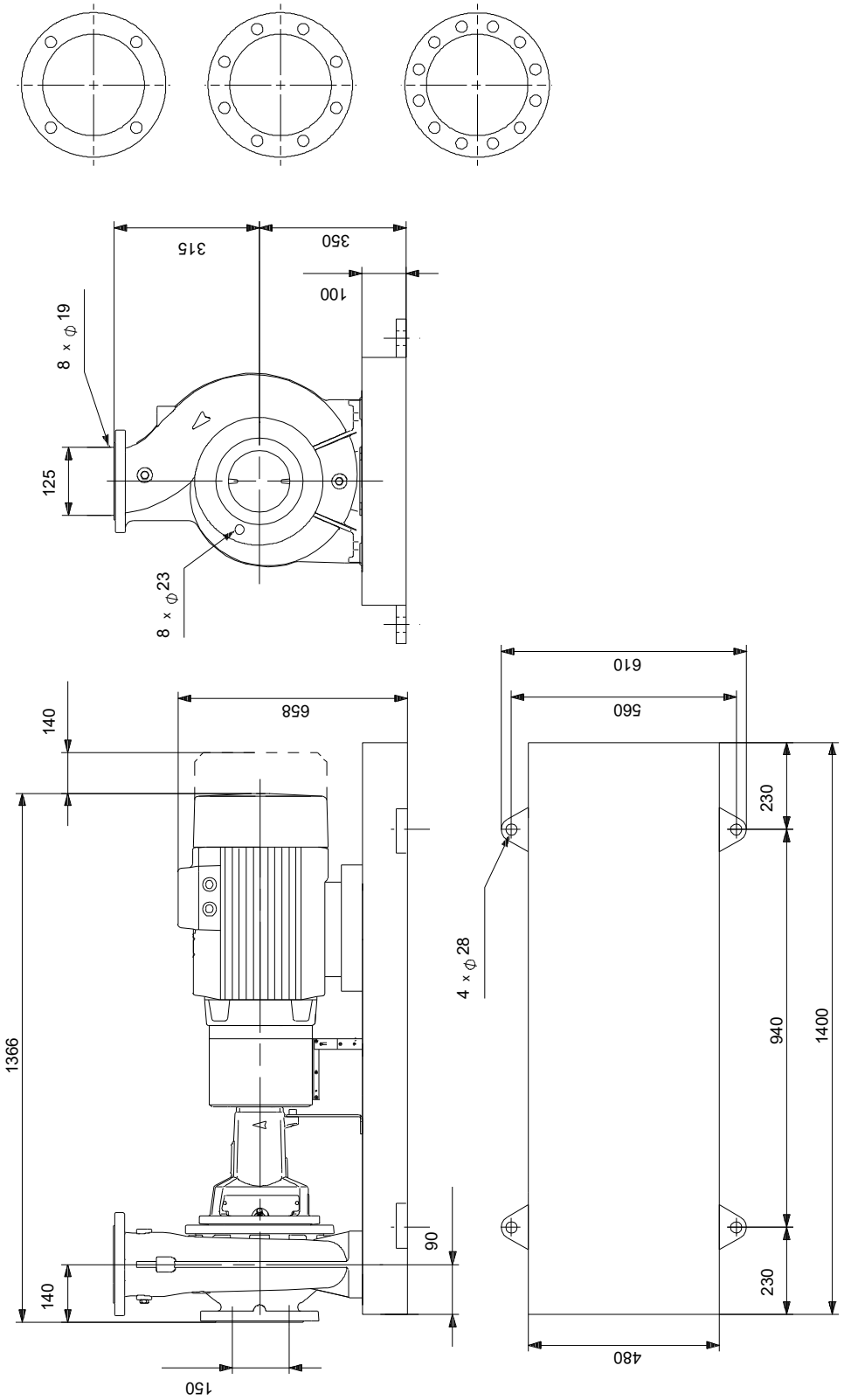

Note! All units are in [mm] unless others are stated.
Disclaimer: This simplified dimensional drawing does not show all details.

Spare parts NKE 125-200/219 EUP, Product No. 98973390
Produced After 1218 (production year and week number)

	Pos	Omschrijving	Opmerking tekst	Classificatie Gegevens	Onderdeelnr.	Aantal	Eenheid
-		Kit, bearing			96579599	1	pcs
	111	Ball bearing			96607904	1	
	53	Ball bearing			96607904	1	
	53.a	O-ring		Diameter: 89,5		1	
				Material type: EPDM			
				Thickness: 3			
	109	O-ring		Diameter: 89,5		1	
				Material type: EPDM			
				Thickness: 3			
	156a	Bearing cover				2	
	159f	Retaining ring				2	
	159a	V-ring				2	
-		Kit, bearing bracket			95131794	1	pcs
	7.k	Hex socket head cap screw		Length (mm): 10		4	
				Thread: M6			
	36.a	Nut		Thread: M10		6	
	76a	Rivet				2	
	86	Bearing bracket				1	
	124d	Shaft guard				1	
	124d	Shaft guard				1	
	124.d	Pan head screw				4	
-		Kit, coupling			96579802	1	pcs
-	8	Coupling cpl.				1	
	89s	Spacer ring					1
	89r	Spacer sleeve					1
	89o	Coupling part spacer side					1
	89.p	Coupling female					1
	89.d	Hex socket head cap screw		Length (mm): 16			6
				Thread: M6			
	89.b	Socket set screw		Length (mm): 8			1
				Thread: M6			
	89	Rubber blocks for coupling					6
	11.a	Parallel key				1	
-		Kit, coupling guard			98078801	1	pcs
	7b	Hex socket head cap screw		Length (mm): 10		4	
				Thread: M6			
	7b	Retainer for coupling guard				1	
+	7	Coupling guard cpl.				1	
-		Kit, cover			95131788	1	pcs
	18	Plug				1	
	36	Nut		Thread: M10		8	
	77	Cover f/mech. seal				1	
-		Kit, foot for bearing bracket			96909488	1	pcs
		Nut		Thread: M12		2	
	66	Washer				2	
	90.e	Hex head screw		Length (mm): 25		1	
				Thread: M12			
	90.d	Hex head bolt		Length (mm): 100		2	
				Thread: M12			
	90.d	Hex head screw		Length (mm): 60		2	
				Thread: M12			
	90.d	Hex head screw		Length (mm): 35MM		2	
				Thread: M12			
	90.d	Hex head screw		Length (mm): 30		2	
				Thread: M12			
	90.c	Foot				1	
-		Kit, foot for coupling guard			96848532	1	pcs
	7h	Hex head screw		Length (mm): 16		2	

Pos	Omschrijving	Opmerking tekst	Classificatie Gegevens	Onderdeelnr.	Aantal	Eenheid
			Thread: M8			
- 7.d	Foot cpl.				1	
7l	Support f/coupling guard foot					1
7h	Hex socket head cap screw					2
7d	Foot for coupling guard					1
66	Washer				2	
-	Kit, nut			96939130	1	pcs
11	Parallel key				1	
- 36	Nut				1	
66a	Spring lock washer					1
66	Washer					1
67	Nut		Thread: M18			1
-	Kit, pump housing			98776465	1	pcs
6	Pump housing				1	
20	Plug				2	
36	Nut		Thread: M10		8	
-	Kit, rubber blocks f. coupling			96480016	1	pcs
89	Rubber blocks for coupling				6	
-	Kit, shaft			96039655	1	pcs
11.a	Parallel key				1	
11	Parallel key				1	
51	Shaft				1	
66a	Spring lock washer				1	
66	Washer				1	
67	Nut		Thread: M18		1	
-	Kit, shaft cover			96809957	1	pcs
124d	Shaft guard				1	
124d	Shaft guard				1	
124.d	Pan head screw				4	
-	Spare, wear ring			96797628	1	pcs
45	Wear ring				1	
-	V-ring			96871238	1	pcs
159a	V-ring				2	
-	Motor				1	pcs
-	Kit, bearing cpl.			96796674	1	
32b	Waved washer					1
111	Ball bearing					1
154	Ball bearing					1
157	O-ring					1
-	Kit, bearing plate			96796664	1	
155.a	Bearing cover					1
208a	Gasket					3
208	Hex socket head cap screw		Designation: DIN912			3
			Length (mm): 40			
			Thread: M5			
-	Kit, connector plugs			96348923	1	
	Connector plug 5-pole					1
	Connector plug 4-pole					1
	Connector plug 4-pole					1
	Connector plug 3-pole					1
	Connector plug 3-pole					1
	Connector plug 3-pole					1
	Connector plug 3-pole					1
	Connector plug					1
- 273	Kit, control board			96348918	1	
	Service kit instruction					1
	Controlboard					1
-	Kit, end shield			96796660	1	
156.b	End shield DE					1
159.b	Seal ring					1

Pos	Omschrijving	Opmerking tekst	Classificatie Gegevens	Onderdeelnr.	Aantal	Eenheid
185.b	Nut					4
185	Hex socket head cap screw					4
186	Drain plug					3
195.a	Grease nipple					1
-	Kit, eyebolt			96796712	1	
189	Eyebolt					2
-	Kit, fan cover			96830826	1	
151	Fan cover					1
152.a	Rubber bush					4
152	Hex head cap screw					4
196	Diaphragm					1
-	Kit, foot			96796666	1	
191	Foot					2
192	Hex socket head cap screw					4
194	Lock washer					4
194	Nut					4
-	Kit, funct. module - E-pump			96348929	1	
263	MGE large I/O add-on					1
-	Kit, funct. module -Geni/RS485			96348932	1	
263	Add-on module, cpl. w/plugs					1
-	Kit, gaskets			96798508	1	
184	O-ring		Diameter: 235			2
275	Kit, inverter board			96348919	1	
-	Kit, key			96279873	1	
40	Parallel key		Designation: DS96 DIN 6885 Dimension: 12X8X90			1
-	Kit, lubrication nipple			96796671	1	
195.b	Grease nipple					2
195.a	Grease nipple					1
-	Kit, motor			96844402	1	
	Flex insulation					3
	EMC filter					1
	Cover cpl.					1
	Fan					1
	Motor					1
99a	Retaining ring					1
151	Fan cover					1
152.a	Rubber bush					4
152	Hex head cap screw					4
177	Torx Screw					1
185.b	Nut					4
185.b	Nut					4
191	Foot					2
192	Hex socket head cap screw					4
194	Lock washer					4
196	Diaphragm					1
273a	Pan head thread forming screw					4
-	Kit, ND-end shield cpl.			96932023	1	
32b	Waved washer					1
156.a	End shield NDE					1
157	O-ring					1
159.b	V-ring					1
185.c	Nut					4
185	Hex socket head cap screw					4

Pos	Omschrijving	Opmerking tekst	Classificatie Gegevens	Onderdeelnr.	Aantal	Eenheid
195.b	Grease nipple					1
-	Kit, opr. panel			96348924	1	
259	Operation panel					1
274	Kit, rectifier board			96348921	1	
-	Kit, shaft grounding ring			96932121	1	
	Ring					1
- 251	Kit, terminal box			96348913	1	
164	Cover cpl.					1
166	Pan head thread forming screw					5
251	Terminal box cpl.					1
277	Blind cover					1
283	Motor cover cpl.					1
284	Cover					1
-	Kit, varistor			96348917	1	
279.b	Pan head thread forming screw					2
279	Varistor					1
7k	Hex socket head cap screw		Length (mm): 10	97506946	4	pcs
			Thread: M6			
28	Hex head screw		Length (mm): 25	99522923	1	pcs
			Thread: M12			
36	Nut		Thread: M12	96620479	4	pcs
36	Nut		Thread: M10	96620484	8	pcs
49	Impeller			99010594	1	pcs
54	Ball bearing			98638919	2	pcs
67	Nut		Thread: M18	92526535	1	pcs
72.a	O-ring		Diameter: 221,84	92547617	1	pcs
			Material type: EPDM			
			Thickness: 3,53			
72.a	O-ring		Diameter: 221,84	97511825	1	pcs
			Material type: EPDM			
			Thickness: 3,53			
72.a	O-ring		Diameter: 221,84	97757671	1	pcs
			Material type: EPDM			
			Thickness: 3,53			
77a	Pan head screw			99266550	4	pcs
105b	Spacer			96591277	1	pcs
109	O-ring		Diameter: 89,5	97511809	2	pcs
			Material type: EPDM			
			Thickness: 3			
156a	Bearing cover			97506937	2	pcs