POMPTECHNIEK • SERVICE • ONDERHOUD

Inventflow: Grundfos A-partner

Grundfos NK 50-250/222 A2F2AE-SBQQE

Find the pump here:
https://inventflow.nl/en/pompenfilter/nk/grundfos-nk-50-250-222-a2f2ae-sbqqe

Contact

info@inventflow.nl
+31 (0) 546 45 80 72

Datasheet

Qty.	Description
1	**NK 50-250/222 A2F2AE-SBQQE**

Note! Product picture may differ from actual product

Product No.: 98973453

Non-self priming, single-stage centrifugal
Flange standard: pump according to EN 1092-2.

The pump is for the pumping of thin, clean or
slightly contaminated
liquids without abrasive or long-fibred
solids.

Phase: Pump and 3-phase AC motor are mounted
as separate units on a common baseplate and

The impeller is hydraulically as well as
dynamically balanced.

The pump has the following characteristics:
- flange dimensions according to
EN 1092-2,

Pump housing: - Cast iron volute
pump housing,
- stainless steel shaft

Impeller: and Cast iron impeller
and bronze wear rings,
- unbalanced mechanical shaft seal
according to EN 12756.

Controls:
Frequency converter: NONE
Pressure sensor: N

Liquid:
Pumped liquid: Water
Liquid temperature range: -25 .. 120 °C
Selected liquid temperature: 20 °C
Density: 998.2 kg/m³

Technical:
Pump speed on which pump data are based: 2940 rpm
Rated flow: 73.09 m³/h
Pump with motor: Y
Rated head: 57.56 m
Actual impeller diameter: 222 mm
Nominal impeller diameter: 250
Code for shaft seal: BQQE
Curve tolerance: ISO9906:2012 3B
Bearing design: Standard

Materials:
Pump housing: Cast iron
EN-GJL-250
ASTM class 35
Wear ring: Brass
Impeller: Cast iron
EN-GJL-200

Qty.	Description	
		ASTM class 30
	Shaft:	Stainless steel
		EN 1.4301
		AISI 304
	Internal pump house coating:	CED
	Installation:	
	Maximum ambient temperature:	60 °C
	Maximum operating pressure:	16 bar
	Pipe connection standard:	EN 1092-2
	Type of inlet connection:	DIN
	Type of outlet connection:	DIN
	Size of inlet connection:	DN 65
	Size of outlet connection:	DN 50
	Pressure rating for connection:	PN 16
	Coupling type:	Flexible w/spacer
	Base frame design:	EN/ISO
	Grouting:	N
	Electrical data:	
	Motor type:	160LB
	IE Efficiency class:	IE3
	Rated power - P2:	18.5 kW
	Mains frequency:	50 Hz
	Rated voltage:	3 x 380-415D/660-690Y V
	Rated current:	34,5-32,5/20,0-18,8 A
	Starting current:	830-980 %
	Cos phi - power factor:	0.89-0.85
	Rated speed:	2940-2950 rpm
	Efficiency:	IE3 92,4%
	Motor efficiency at full load:	92.4 %
	Motor efficiency at 3/4 load:	93.2 %
	Motor efficiency at 1/2 load:	93.2 %
	Number of poles:	2
	Enclosure class (IEC 34-5):	55 Dust/Jetting
	Insulation class (IEC 85):	F
	Motor No:	87420026
	Others:	
	Minimum efficiency index, MEI ≥:	0.61
	Net weight:	255 kg
	Gross weight:	270 kg
	Shipping volume:	0.495 m³
	Country of origin:	HU
	Custom tariff no.:	84137059

98973453 NK 50-250/222 A2F2AE-SBQQE 50 Hz

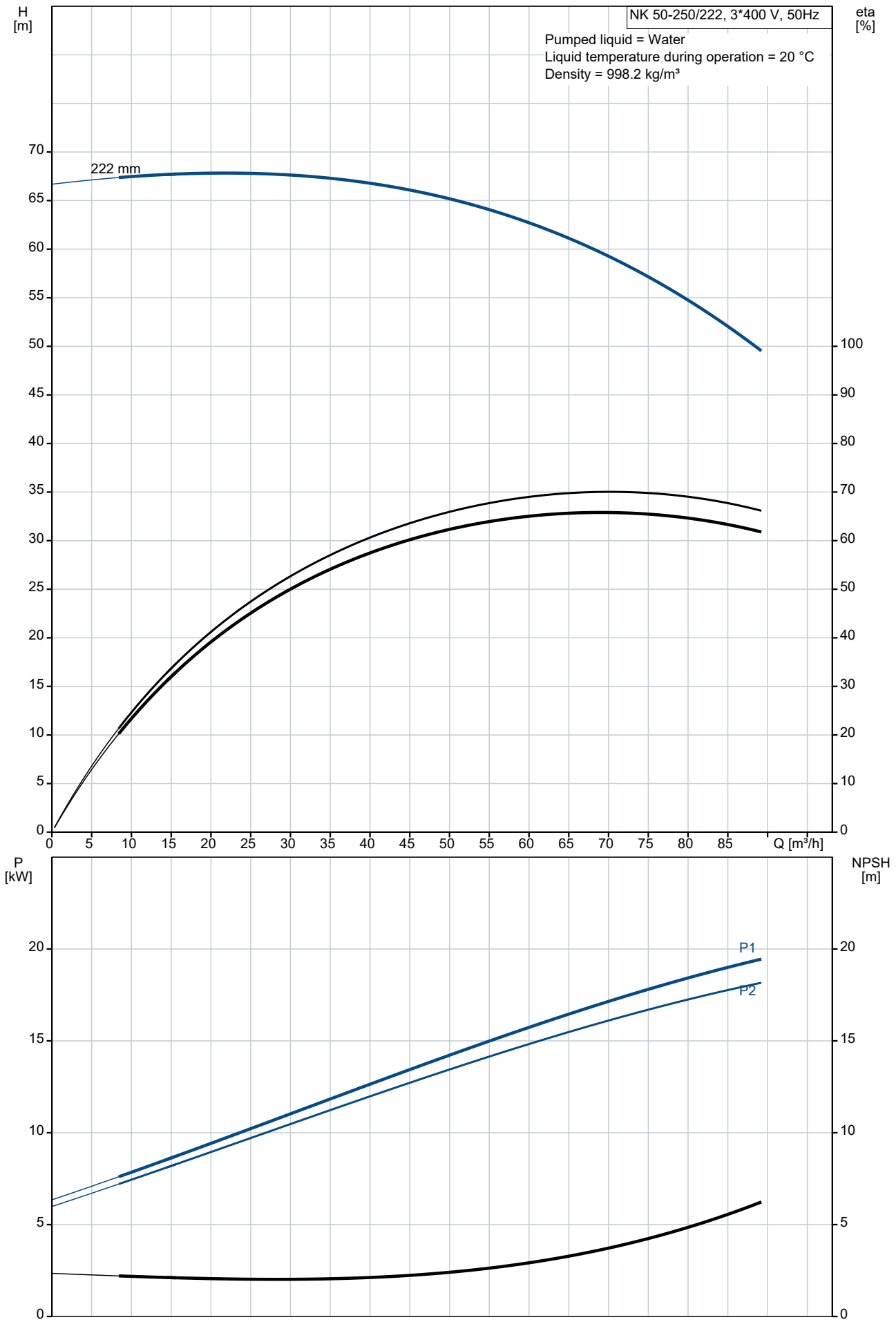

Description	Value
General information:	
Product name:	NK 50-250/222 A2F2AE-SBQQE
Product No:	98973453
EAN number:	5712604505755
Technical:	
Pump speed on which pump data are based:	2940 rpm
Rated flow:	73.09 m³/h
Pump with motor:	Y
Rated head:	57.56 m
Actual impeller diameter:	222 mm
Nominal impeller diameter:	250
Shaft diameter:	24 mm
Code for shaft seal:	BQQE
Curve tolerance:	ISO9906:2012 3B
Pump version:	A2
Bearing design:	Standard
Materials:	
Pump housing:	Cast iron
Pump housing:	EN-GJL-250
Pump housing:	ASTM class 35
Wear ring:	Brass
Impeller:	Cast iron
Impeller:	EN-GJL-200
Impeller:	ASTM class 30
Shaft:	Stainless steel
Shaft:	EN 1.4301
Shaft:	AISI 304
Internal pump house coating:	CED
Material code:	A
Code for rubber:	E
Installation:	
Maximum ambient temperature:	60 °C
Maximum operating pressure:	16 bar
Pipe connection standard:	EN 1092-2
Type of inlet connection:	DIN
Type of outlet connection:	DIN
Size of inlet connection:	DN 65
Size of outlet connection:	DN 50
Pressure rating for connection:	PN 16
Coupling type:	Flexible w/spacer
Base frame design:	EN/ISO
Grouting:	N
Connect code:	F
Liquid:	
Pumped liquid:	Water
Liquid temperature range:	-25 .. 120 °C
Selected liquid temperature:	20 °C
Density:	998.2 kg/m³
Electrical data:	
Motor type:	160LB
IE Efficiency class:	IE3
Rated power - P2:	18.5 kW
Mains frequency:	50 Hz
Rated voltage:	3 x 380-415D/660-690Y V
Rated current:	34,5-32,5/20,0-18,8 A
Starting current:	830-980 %
Cos phi - power factor:	0.89-0.85
Rated speed:	2940-2950 rpm
Efficiency:	IE3 92,4%
Motor efficiency at full load:	92.4 %
Motor efficiency at 3/4 load:	93.2 %
Motor efficiency at 1/2 load:	93.2 %

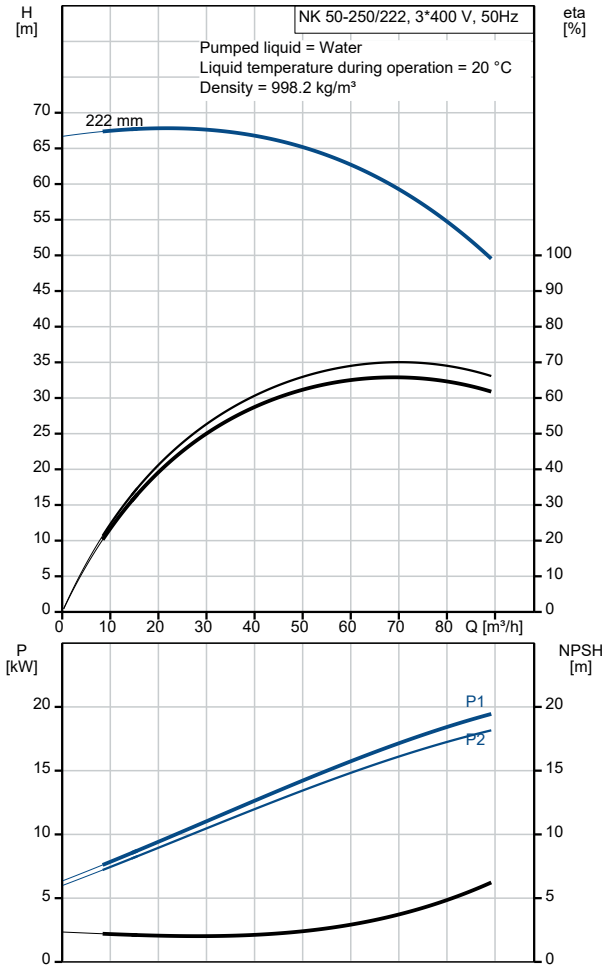

Description	Value
Number of poles:	2
Enclosure class (IEC 34-5):	55 Dust/Jetting
Insulation class (IEC 85):	F
Motor protec:	PTC
Motor No:	87420026
Controls:	
Frequency converter:	NONE
Pressure sensor:	N
Others:	
Minimum efficiency index, MEI ≥:	0.61
Net weight:	255 kg
Gross weight:	270 kg
Shipping volume:	0.495 m³
Country of origin:	HU
Custom tariff no.:	84137059

98973453 NK 50-250/222 A2F2AE-SBQQE 50 Hz

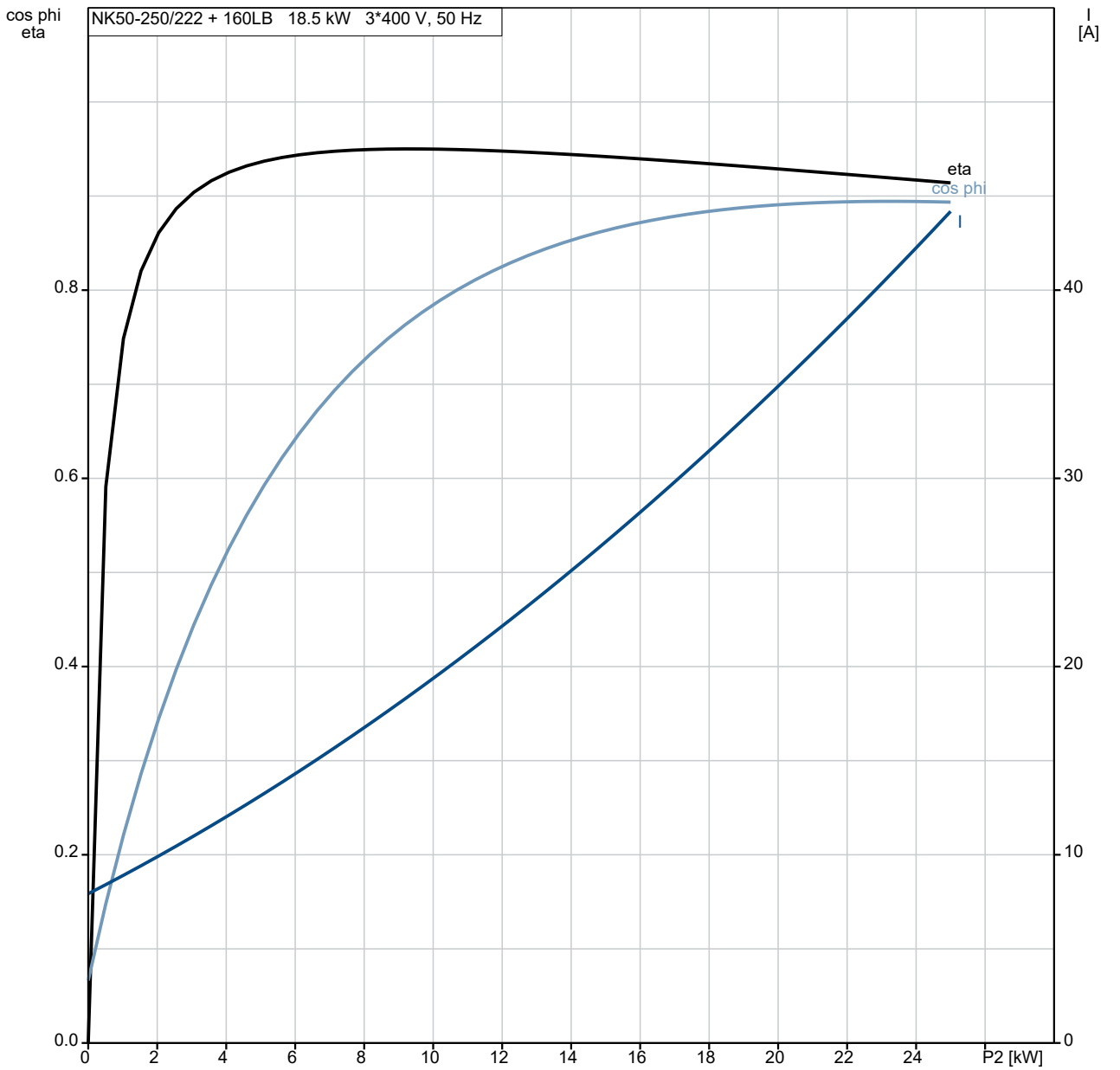

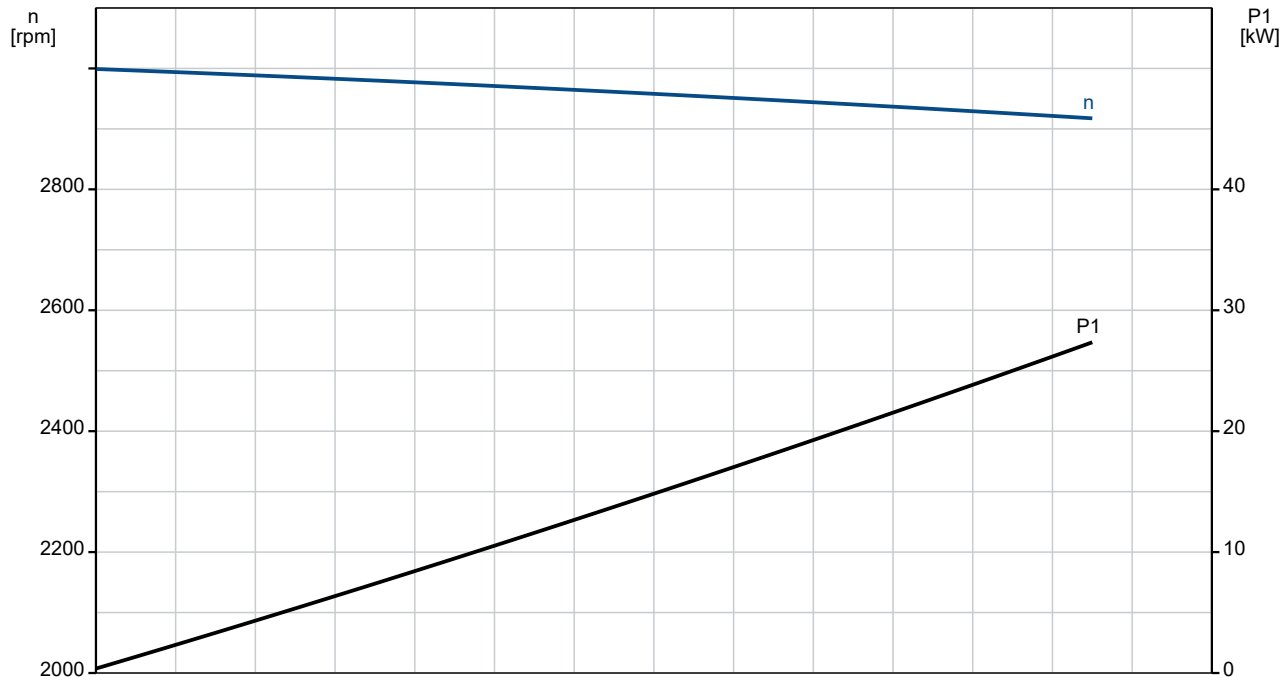

98973453 NK 50-250/222 A2F2AE-SBQQE 50 Hz

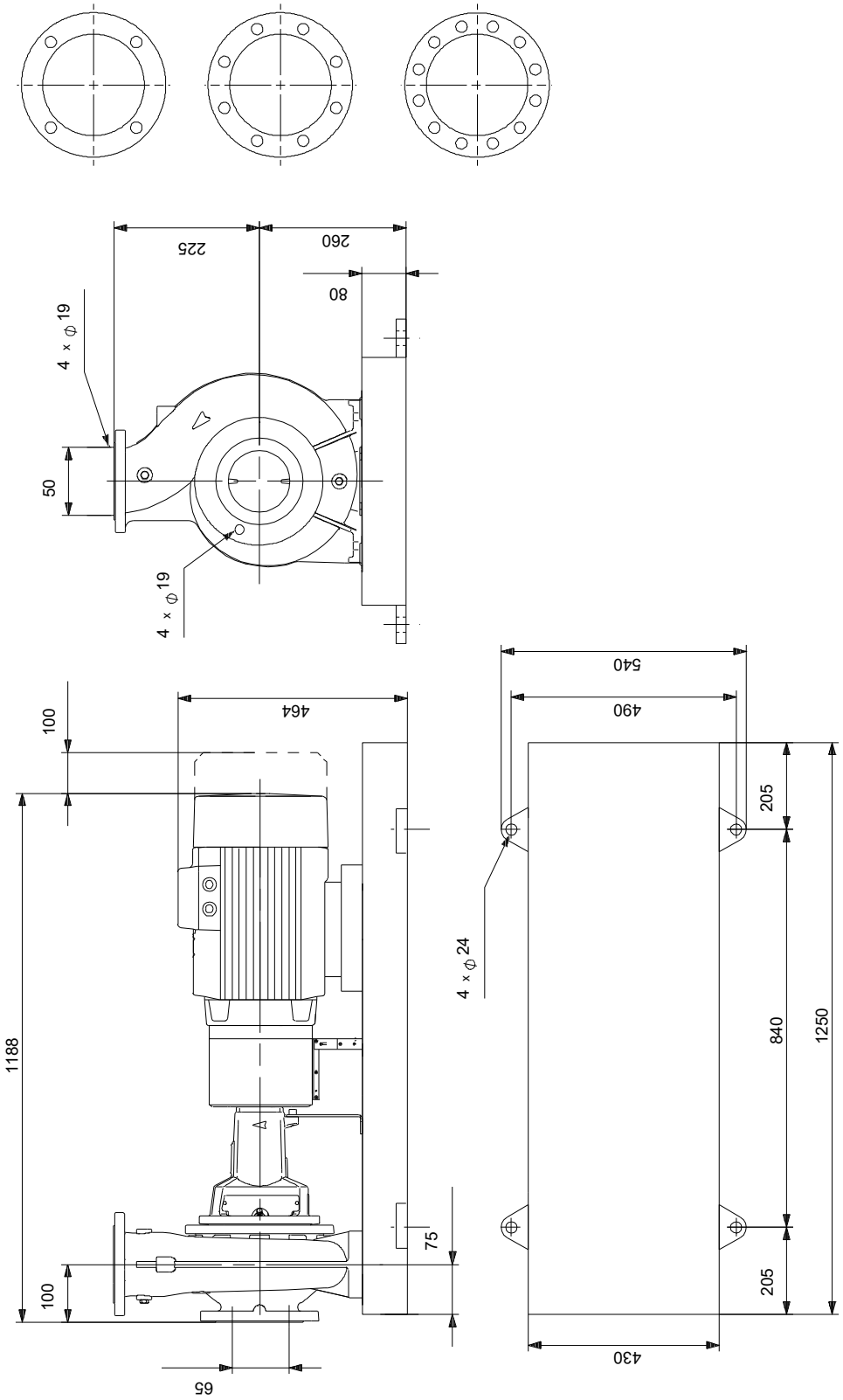

Note! All units are in [mm] unless others are stated.
Disclaimer: This simplified dimensional drawing does not show all details.

Spare parts NK 50-250/222, Product No. 98973453
Produced After 1101 (production year and week number)

	Pos	Omschrijving	Opmerking tekst	Classificatie Gegevens	Onderdeelnr.	Aantal	Eenheid
-		Kit, bearing			96579598	1	pcs
	53a	O-ring		Diameter: 71,5		1	
				Material type: EPDM			
				Thickness: 3			
	53	Ball bearing				1	
	54a	O-ring		Diameter: 71,5		1	
				Material type: EPDM			
				Thickness: 3			
	54	Ball bearing				1	
	156a	Bearing cover				2	
	159f	Retaining ring				2	
	159a	V-ring				2	
-		Kit, bearing bracket			95131793	1	pcs
	7.k	Hex socket head cap screw		Length (mm): 10		4	
				Thread: M6			
	36.a	Nut		Thread: M10		6	
	76a	Rivet				2	
	86	Bearing bracket				1	
	124d	Shaft guard				1	
	124d	Shaft guard				1	
	124.d	Pan head screw				4	
-		Kit, coupling			96579731	1	pcs
-	8	Coupling cpl.				1	
	89s	Spacer ring					1
	89r	Spacer sleeve					1
	89o	Coupling part spacer side					1
	89.p	Coupling female					1
	89.d	Hex socket head cap screw		Length (mm): 16			6
				Thread: M6			
	89.b	Socket set screw		Length (mm): 8			1
				Thread: M6			
	89	Rubber blocks for coupling					6
	11.a	Parallel key		Dimension: 8X7X40		1	
-		Kit, coupling guard			97945066	1	pcs
	7b	Hex socket head cap screw		Length (mm): 10		4	
				Thread: M6			
	7b	Retainer for coupling guard				1	
+	7	Coupling guard cpl.				1	
-		Kit, cover			95131803	1	pcs
	18	Plug				1	
	36	Nut		Thread: M10		10	
	36	Nut		Thread: M10		6	
-	77	Cover				1	
	36	Nut		Thread: M10			6
	77	Cover					1
-		Kit, foot for bearing bracket			96909162	1	pcs
		Nut		Thread: M12		2	
	66	Washer				2	
	90c	Foot				1	
	90.e	Hex head screw		Length (mm): 25		1	
				Thread: M12			
	90.d	Hex head bolt		Length (mm): 100		2	
				Thread: M12			
	90.d	Hex head bolt		Length (mm): 80		2	
				Thread: M12			
	90.d	Hex head bolt		Length (mm): 55		2	
				Thread: M12			
	90.d	Hex socket head cap screw				2	

Pos	Omschrijving	Opmerking tekst	Classificatie Gegevens	Onderdeelnr.	Aantal	Eenheid
90.d	Hex head screw		Length (mm): 35MM		2	
			Thread: M12			
90.d	Hex head screw		Length (mm): 30		2	
			Thread: M12			
-	Kit, foot for coupling guard			96848478	1	pcs
7h	Hex head screw		Length (mm): 16		2	
			Thread: M8			
- 7.d	Foot cpl.				1	
7l	Support f/coupling guard foot					1
7h	Hex socket head cap screw					2
7d	Foot for coupling guard					1
66	Washer				2	
-	Kit, nut			96939128	1	pcs
11	Parallel key		Dimension: 6X6X35		1	
- 36	Nut				1	
66a	Spring lock washer					1
66	Washer					1
67	Nut		Thread: M14			1
-	Kit, pump housing			95131719	1	pcs
- 6	Pump housing				1	
26	Staybolt		Length (mm): 35			10
			Thread: M10			
45	Wear ring					1
20	Pipe plug		Thread: R 3/8		2	
36	Nut		Thread: M10		10	
-	Kit, rubber blocks f. coupling			96480016	1	pcs
89	Rubber blocks for coupling				6	
-	Kit, shaft			96039654	1	pcs
11.a	Parallel key		Dimension: 8X7X40		1	
11	Parallel key		Dimension: 6X6X35		1	
51	Shaft				1	
66a	Spring lock washer				1	
66	Washer				1	
67	Nut		Thread: M14		1	
-	Kit, shaft cover			96809954	1	pcs
124d	Shaft guard				1	
124d	Shaft guard				1	
124.d	Pan head screw				4	
-	Spare, wear ring			96810102	1	pcs
45b	Wear ring				1	
-	Spare, wear ring			96810141	1	pcs
45	Wear ring				1	
-	V-ring			96591314	1	pcs
159a	V-ring				1	
-	Motor				1	pcs
-	Kit, bearing cpl.			96796674	1	
32b	Waved washer					1
111	Ball bearing					1
154	Ball bearing					1
157	O-ring					1
-	Kit, bearing plate			96796664	1	
155.a	Bearing cover					1
208a	Gasket					3
208	Hex socket head cap screw		Designation: DIN912			3
			Length (mm): 40			
			Thread: M5			
-	Kit, end shield			96796660	1	
156.b	End shield DE					1
159.b	Seal ring					1
185.b	Nut					4

Pos	Omschrijving	Opmerking tekst	Classificatie Gegevens	Onderdeelnr.	Aantal	Eenheid
185	Hex socket head cap screw				4	
186	Drain plug				3	
195.a	Grease nipple				1	
-	Kit, eyebolt			96796712	1	
189	Eyebolt				2	
-	Kit, fan			96796648	1	
156.c	Retaining ring				1	
156	Fan				1	
-	Kit, fan cover			96796647	1	
151	Fan cover				1	
152.a	Rubber bush				4	
152	Hex head cap screw				4	
196	Diaphragm				1	
-	Kit, foot			96796665	1	
191	Foot				2	
192	Hex socket head cap screw				4	
194	Lock washer				4	
194	Nut				4	
-	Kit, gaskets			96798508	1	
184	O-ring		Diameter: 235		2	
-	Kit, key			96279873	1	
40	Parallel key		Designation: DS96 DIN 6885 Dimension: 12X8X90		1	
-	Kit, lubrication nipple			96796671	1	
195.b	Grease nipple				2	
195.a	Grease nipple				1	
-	Kit, ND-end shield cpl.			96796669	1	
32b	Waved washer				1	
156.a	End shield NDE				1	
157	O-ring				1	
159	V-ring				1	
185.c	Nut				4	
185.a	Hex socket head cap screw				4	
195.b	Grease nipple				1	
-	Kit, shaft seal			96843459	1	
159.b	V-ring				1	
159	V-ring				1	
-	Kit, terminal board			96796657	1	
	Terminal connection				3	
	Washer				12	
36	Hex nut				12	
173	Torx Screw				1	
176.d	Terminal board				1	
176	Terminal board				1	
177	Torx Screw				1	
-	Kit, terminal box cover			96796659	1	
164	Terminal box cover				1	
273a	Pan head thread forming screw				4	
7k	Hex socket head cap screw		Length (mm): 10 Thread: M6	97506946	4	pcs
28	Hex head screw		Length (mm): 25 Thread: M12	99522923	1	pcs
36	Nut		Thread: M10	96620484	10	pcs
49	Impeller			98517555	1	pcs

Pos	Omschrijving	Opmerking tekst	Classificatie Gegevens	Onderdeelnr.	Aantal	Eenheid
53.b	Spacer ring			96938908	1	pcs
54a	O-ring		Diameter: 71,5	97511807	2	pcs
			Material type: EPDM			
			Thickness: 3			
67	Nut		Thread: M14	92526531	1	pcs
72a	O-ring		Diameter: 253,6	92547618	1	pcs
			Material type: EPDM			
			Thickness: 3,53			
72a	O-ring		Diameter: 253,6	92526509	1	pcs
			Material type: EPDM			
			Thickness: 3,53			
72a	O-ring		Diameter: 253,6	97511826	1	pcs
			Material type: EPDM			
			Thickness: 3,53			
72a	O-ring		Diameter: 253,6	97757672	1	pcs
			Material type: EPDM			
			Thickness: 3,53			
77a	Pan head screw			99266550	4	pcs
156a	Bearing cover			97506936	2	pcs