Inventflow: Grundfos A-partner

Grundfos NK 65-250/254 A2F2AE-SBQQE

Find the pump here:
https://inventflow.nl/en/pompenfilter/nk/grundfos-nk-65-250-254-a2f2ae-sbqqe

Contact

info@inventflow.nl
+31 (0) 546 45 80 72

Datasheet

Qty.	Description
1	**NK 65-250/254 A2F2AE-SBQQE**

Note! Product picture may differ from actual product

Product No.: 98973493

Non-self priming, single-stage centrifugal
Flange standard: pump according to EN 1092-2.

The pump is for the pumping of thin, clean or
slightly contaminated
liquids without abrasive or long-fibred
solids.

Phase: Pump and 3-phase AC motor are mounted
as separate units on a common baseplate and

The impeller is hydraulically as well as
dynamically balanced.

The pump has the following characteristics:
- flange dimensions according to
EN 1092-2,

Pump housing: - Cast iron volute
pump housing,
- stainless steel shaft

Impeller: and Cast iron impeller
and bronze wear rings,
- unbalanced mechanical shaft seal
according to EN 12756.

Controls:
Frequency converter: NONE
Pressure sensor: N

Liquid:
Pumped liquid: Water
Liquid temperature range: -25 .. 120 °C
Selected liquid temperature: 20 °C
Density: 998.2 kg/m³

Technical:
Pump speed on which pump data are based: 1475 rpm
Rated flow: 71.21 m³/h
Pump with motor: Y
Rated head: 19.76 m
Actual impeller diameter: 254 mm
Nominal impeller diameter: 250
Code for shaft seal: BQQE
Curve tolerance: ISO9906:2012 3B2
Bearing design: Standard

Materials:
Pump housing: Cast iron
EN-GJL-250
ASTM class 35
Wear ring: Brass
Impeller: Cast iron
EN-GJL-200

Qty.	Description	
		ASTM class 30
	Shaft:	Stainless steel
		EN 1.4301
		AISI 304
	Internal pump house coating:	CED
	Installation:	
	Maximum ambient temperature:	55 °C
	Maximum operating pressure:	16 bar
	Pipe connection standard:	EN 1092-2
	Type of inlet connection:	DIN
	Type of outlet connection:	DIN
	Size of inlet connection:	DN 80
	Size of outlet connection:	DN 65
	Pressure rating for connection:	PN 16
	Coupling type:	Flexible w/spacer
	Base frame design:	EN/ISO
	Grouting:	N
	Electrical data:	
	Motor type:	SIEMENS
	IE Efficiency class:	IE3
	Rated power - P2:	5.5 kW
	Mains frequency:	50 Hz
	Rated voltage:	3 x 380-420D/660-725Y V
	Rated current:	11,13-10,1/6,4-5,8 A
	Starting current:	720-720 %
	Cos phi - power factor:	0.84
	Rated speed:	1475 rpm
	Efficiency:	IE3 89,6%
	Motor efficiency at full load:	89.6-89.6 %
	Motor efficiency at 3/4 load:	90.1-90.1 %
	Motor efficiency at 1/2 load:	89.5-89.5 %
	Number of poles:	4
	Enclosure class (IEC 34-5):	IP55
	Insulation class (IEC 85):	F
	Motor No:	98957790
	Others:	
	Minimum efficiency index, MEI ≥:	0.67
	Net weight:	244 kg
	Gross weight:	259 kg
	Shipping volume:	0.53 m³
	Country of origin:	HU
	Custom tariff no.:	84137059

98973493 NK 65-250/254 A2F2AE-SBQQE 50 Hz

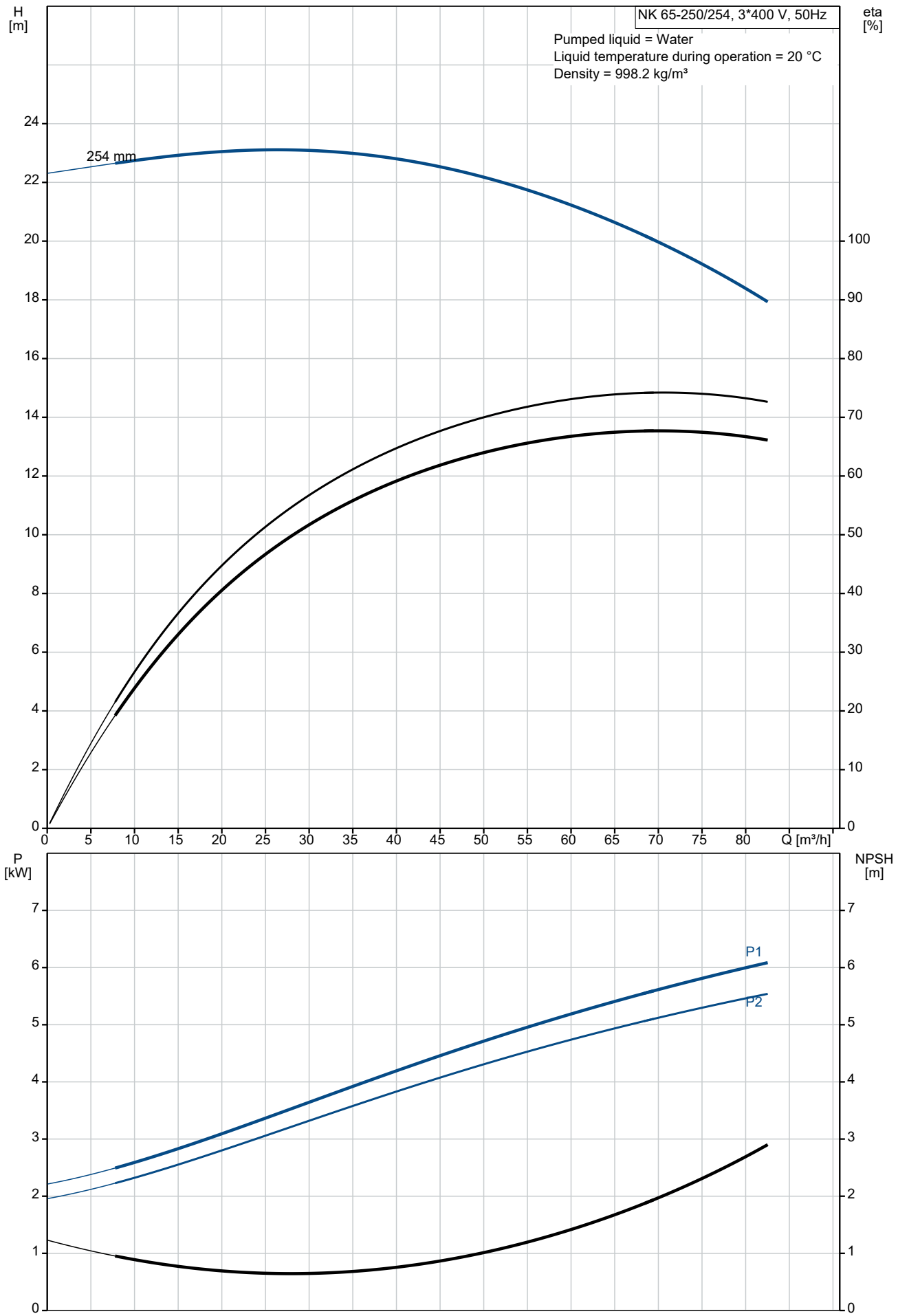

Description	Value
General information:	
Product name:	NK 65-250/254 A2F2AE-SBQQE
Product No:	98973493
EAN number:	5712604506561
Technical:	
Pump speed on which pump data are based:	1475 rpm
Rated flow:	71.21 m³/h
Pump with motor:	Y
Rated head:	19.76 m
Actual impeller diameter:	254 mm
Nominal impeller diameter:	250
Shaft diameter:	32 mm
Code for shaft seal:	BQQE
Curve tolerance:	ISO9906:2012 3B2
Pump version:	A2
Bearing design:	Standard
Materials:	
Pump housing:	Cast iron
Pump housing:	EN-GJL-250
Pump housing:	ASTM class 35
Wear ring:	Brass
Impeller:	Cast iron
Impeller:	EN-GJL-200
Impeller:	ASTM class 30
Shaft:	Stainless steel
Shaft:	EN 1.4301
Shaft:	AISI 304
Internal pump house coating:	CED
Material code:	A
Code for rubber:	E
Installation:	
Maximum ambient temperature:	55 °C
Maximum operating pressure:	16 bar
Pipe connection standard:	EN 1092-2
Type of inlet connection:	DIN
Type of outlet connection:	DIN
Size of inlet connection:	DN 80
Size of outlet connection:	DN 65
Pressure rating for connection:	PN 16
Coupling type:	Flexible w/spacer
Base frame design:	EN/ISO
Grouting:	N
Connect code:	F
Liquid:	
Pumped liquid:	Water
Liquid temperature range:	-25 .. 120 °C
Selected liquid temperature:	20 °C
Density:	998.2 kg/m³
Electrical data:	
Motor type:	SIEMENS
IE Efficiency class:	IE3
Rated power - P2:	5.5 kW
Mains frequency:	50 Hz
Rated voltage:	3 x 380-420D/660-725Y V
Rated current:	11,13-10,1/6,4-5,8 A
Starting current:	720-720 %
Cos phi - power factor:	0.84
Rated speed:	1475 rpm
Efficiency:	IE3 89,6%
Motor efficiency at full load:	89.6-89.6 %
Motor efficiency at 3/4 load:	90.1-90.1 %
Motor efficiency at 1/2 load:	89.5-89.5 %

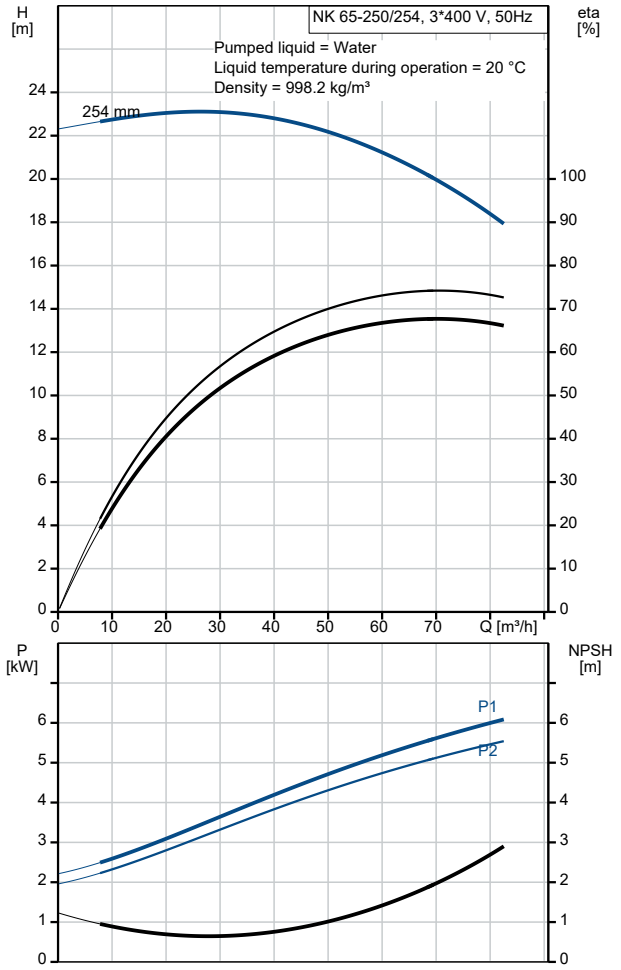

Description	Value
Number of poles:	4
Enclosure class (IEC 34-5):	IP55
Insulation class (IEC 85):	F
Motor protec:	PTC
Motor No:	98957790
Controls:	
Frequency converter:	NONE
Pressure sensor:	N
Others:	
Minimum efficiency index, MEI ≥:	0.67
Net weight:	244 kg
Gross weight:	259 kg
Shipping volume:	0.53 m^3
Country of origin:	HU
Custom tariff no.:	84137059

98973493 NK 65-250/254 A2F2AE-SBQQE 50 Hz

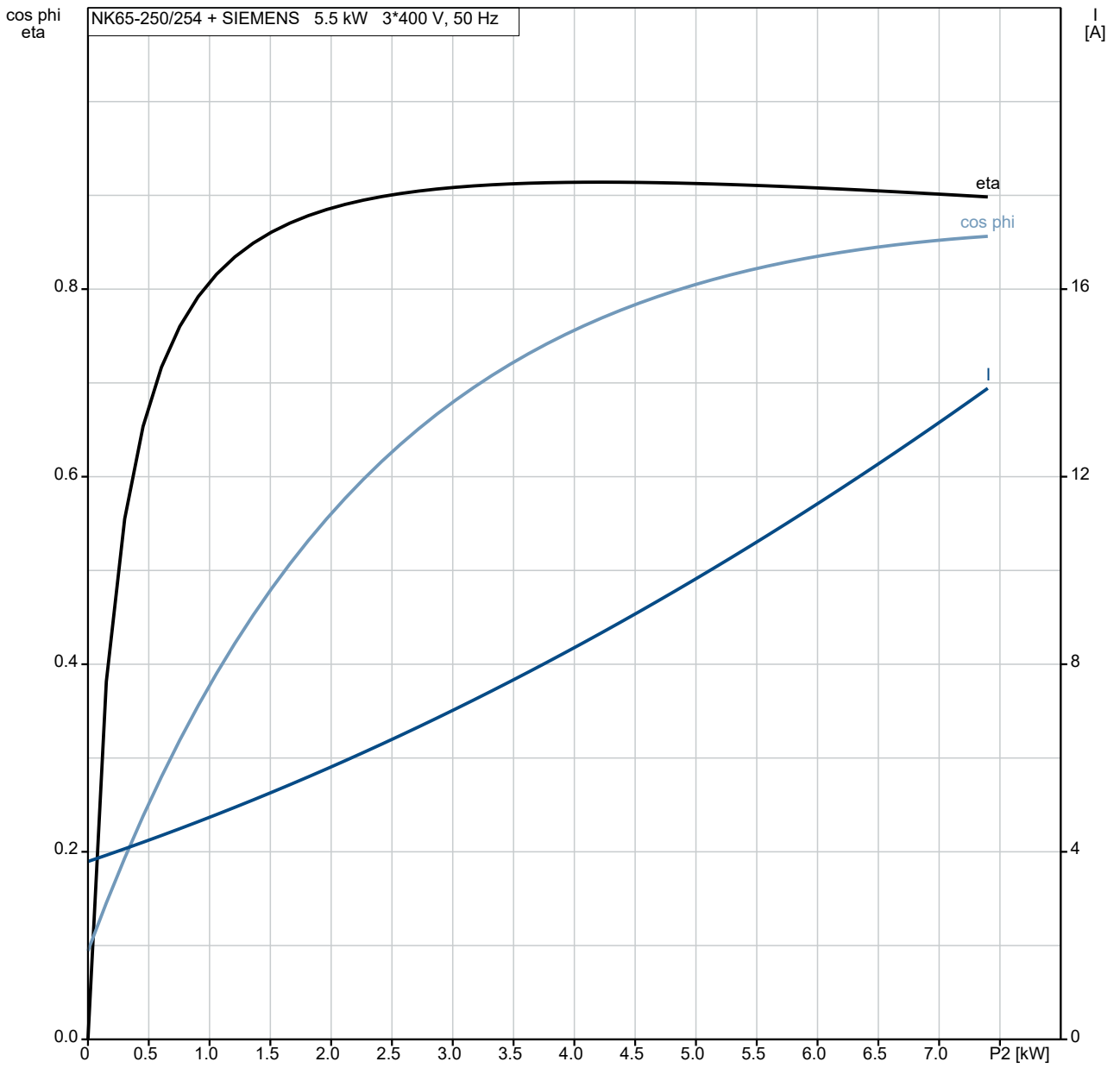

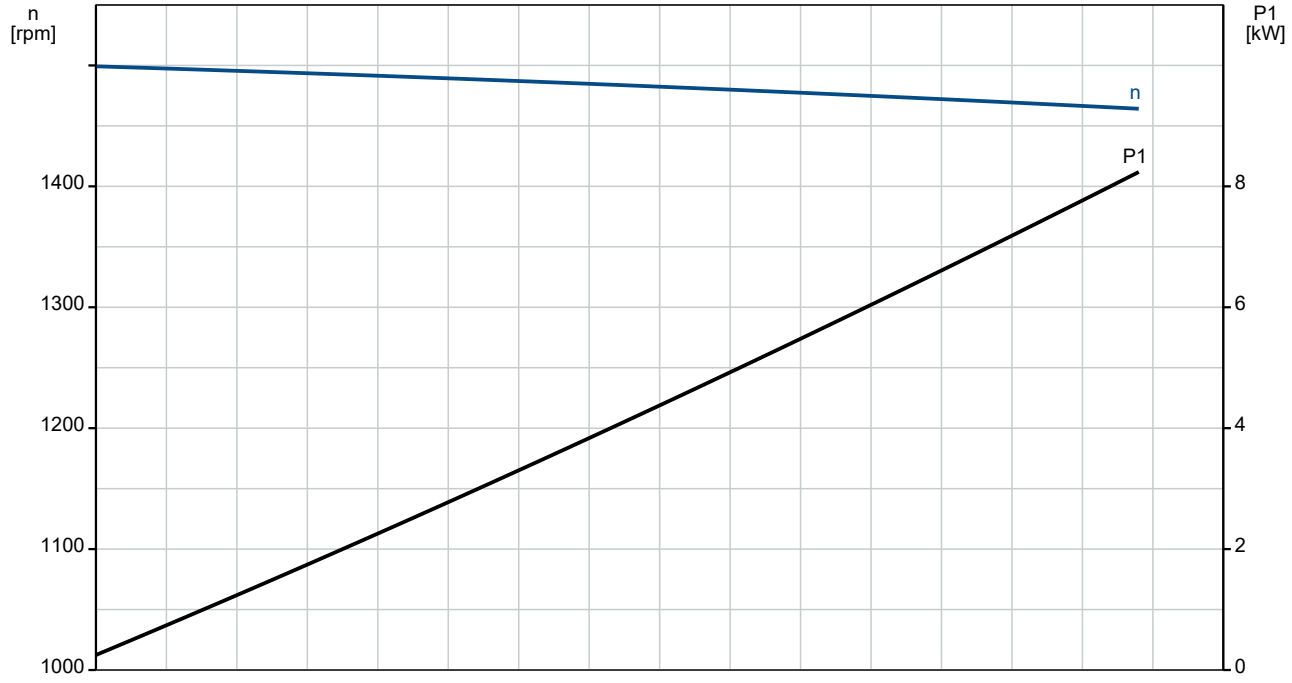

98973493 NK 65-250/254 A2F2AE-SBQQE 50 Hz

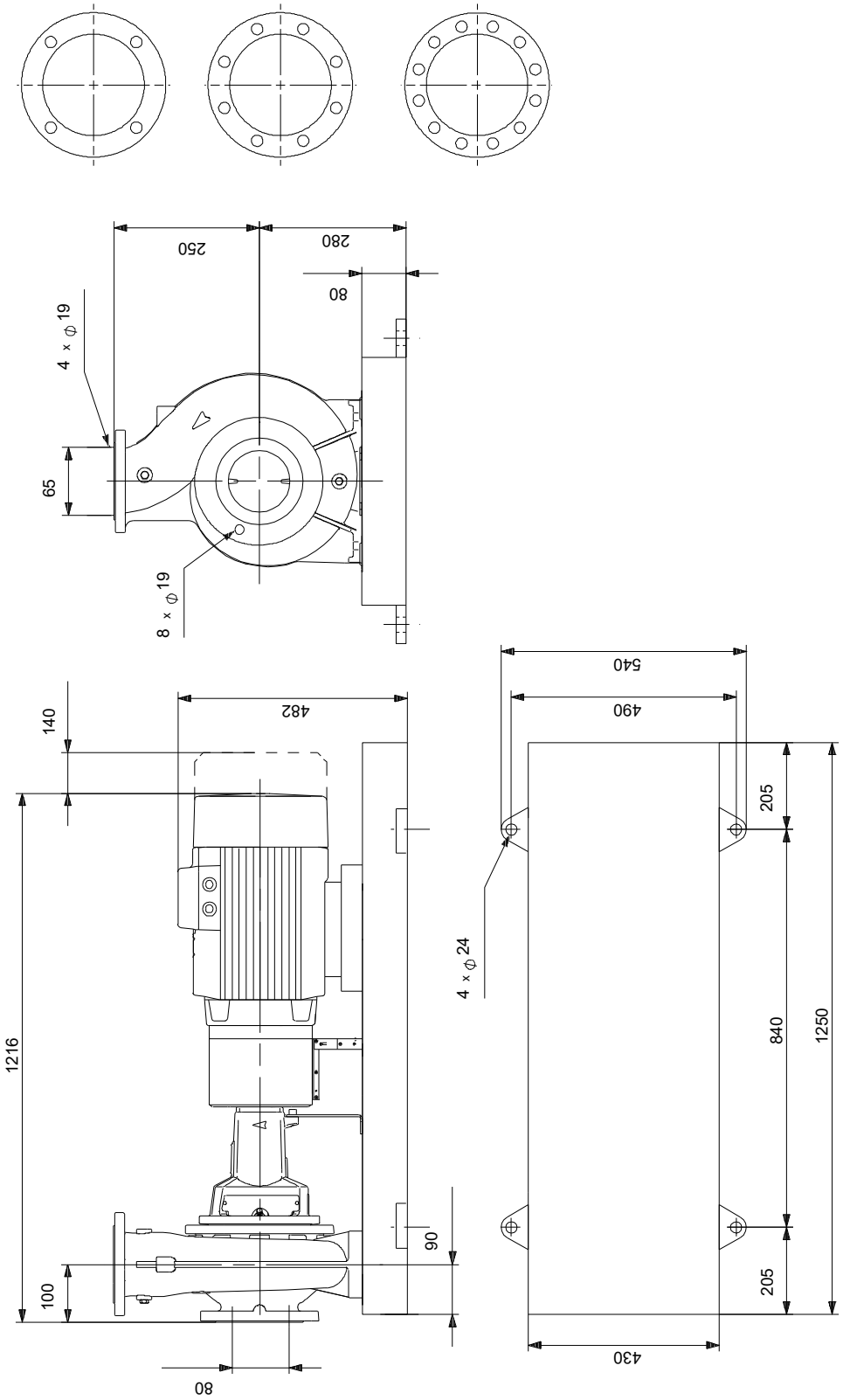

Note! All units are in [mm] unless others are stated.
Disclaimer: This simplified dimensional drawing does not show all details.

Spare parts NK 65-250/254, Product No. 98973493
Produced After 2105 (production year and week number)

Pos	Omschrijving	Opmerking tekst	Classificatie Gegevens	Onderdeelnr.	Aantal	Eenheid
-	Kit, bearing			96579599	1	pcs
111	Ball bearing			96607904	1	
53	Ball bearing			96607904	1	
53.a	O-ring		Diameter: 89,5		1	
			Material type: EPDM			
			Thickness: 3			
109	O-ring		Diameter: 89,5		1	
			Material type: EPDM			
			Thickness: 3			
156a	Bearing cover				2	
159f	Retaining ring				2	
159a	V-ring				2	
-	Kit, bearing bracket			95131794	1	pcs
7.k	Hex socket head cap screw		Length (mm): 10		4	
			Thread: M6			
36.a	Nut		Thread: M10		6	
76a	Rivet				2	
86	Bearing bracket				1	
124d	Shaft guard				1	
124d	Shaft guard				1	
124.d	Pan head screw				4	
-	Kit, coupling			96579800	1	pcs
- 8	Coupling cpl.				1	
89s	Spacer ring					1
89r	Spacer sleeve					1
89o	Coupling part spacer side					1
89.p	Coupling female					1
89.d	Hex socket head cap screw		Length (mm): 16			6
			Thread: M6			
89.b	Socket set screw		Length (mm): 8			1
			Thread: M6			
89	Rubber blocks for coupling					6
11.a	Parallel key				1	
-	Kit, coupling guard			97945075	1	pcs
7b	Hex socket head cap screw		Length (mm): 10		4	
			Thread: M6			
7b	Retainer for coupling guard				1	
- 7	Coupling guard cpl.				1	
7e	Hex socket head cap screw					3
7c	Spacer f/coupling guard					1
94	Lock nut		Thread: M6			2
-	Kit, cover			95131790	1	pcs
18	Plug				1	
36	Nut		Thread: M12		10	
36	Nut		Thread: M10		8	
77	Cover f/mech. seal				1	
-	Kit, foot for bearing bracket			96909170	1	pcs
	Nut		Thread: M12		2	
66	Washer				2	
90.e	Hex head screw		Length (mm): 25		1	
			Thread: M12			
90.d	Hex head bolt		Length (mm): 110		2	
			Thread: M12			
90.d	Hex head bolt		Length (mm): 90		2	
			Thread: M12			
90.d	Hex head bolt		Length (mm): 65		2	
			Thread: M12			
90.d	Hex head bolt		Length (mm): 55		2	
			Thread: M12			

Pos	Omschrijving	Opmerking tekst	Classificatie Gegevens	Onderdeelnr.	Aantal	Eenheid
90.d	Hex head screw		Length (mm): 35MM		2	
			Thread: M12			
90.d	Hex head screw		Length (mm): 40		2	
			Thread: M12			
90.d	Hex head screw		Length (mm): 30		2	
			Thread: M12			
90.c	Foot				1	
-	Kit, foot for coupling guard			96848499	1	pcs
7h	Hex head screw		Length (mm): 16		2	
			Thread: M8			
- 7.d	Foot cpl.				1	
7l	Support f/coupling guard foot				1	
7h	Hex socket head cap screw				2	
7d	Foot for coupling guard				1	
66	Washer				2	
66	Washer				2	
-	Kit, nut			96939130	1	pcs
11	Parallel key				1	
- 36	Nut				1	
66a	Spring lock washer				1	
66	Washer				1	
67	Nut		Thread: M18		1	
-	Kit, pump housing			96930832	1	pcs
6	Pump housing				1	
20	Plug				2	
36	Nut		Thread: M12		10	
-	Kit, rubber blocks f. coupling			96480016	1	pcs
89	Rubber blocks for coupling				6	
-	Kit, shaft			96039655	1	pcs
11.a	Parallel key				1	
11	Parallel key				1	
51	Shaft				1	
66a	Spring lock washer				1	
66	Washer				1	
67	Nut		Thread: M18		1	
-	Kit, shaft cover			96809957	1	pcs
124d	Shaft guard				1	
124d	Shaft guard				1	
124.d	Pan head screw				4	
-	Spare, wear ring			96797628	1	pcs
45	Wear ring				1	
-	Spare, wear ring			96939585	1	pcs
45	Wear ring				1	
-	V-ring			96871238	1	pcs
159a	V-ring				2	
-	Motor				1	pcs
156	Spare, motor fan			98507836	1	
151	Spare, motor fan cover			97644232	1	
176	Spare, Terminal board			98505507	1	
164a	Spare, Terminal box			98505711	1	
7k	Hex socket head cap screw		Length (mm): 10	97506946	4	pcs
			Thread: M6			
28	Hex head screw		Length (mm): 25	99522923	1	pcs
			Thread: M12			
36	Nut		Thread: M12	96620479	10	pcs
36	Nut		Thread: M10	96620484	8	pcs
49	Impeller			98517834	1	pcs
54	Ball bearing			98638919	2	pcs
67	Nut		Thread: M18	92526535	1	pcs
72.a	O-ring		Diameter: 278,99	92547634	1	pcs
			Material type: EPDM			
			Thickness: 3,53			
72.a	O-ring		Diameter: 278,99	92526510	1	pcs
			Material type: EPDM			

Pos	Omschrijving	Opmerking tekst	Classificatie Gegevens	Onderdeelnr.	Aantal	Eenheid
			Thickness: 3,53			
72.a	O-ring		Diameter: 278,99	97511839	1	pcs
			Material type: EPDM			
			Thickness: 3,53			
72.a	O-ring		Diameter: 278,99	97757673	1	pcs
			Material type: EPDM			
			Thickness: 3,53			
77a	Pan head screw			99266550	4	pcs
105b	Spacer			96591277	1	pcs
109	O-ring		Diameter: 89,5	97511809	2	pcs
			Material type: EPDM			
			Thickness: 3			
156a	Bearing cover			97506937	2	pcs