Inventflow: Grundfos A-partner

Grundfos NB 100-315/272 AF2ABQQE

Find the pump here:
https://inventflow.nl/en/pompenfilter/nb/grundfos-nb-100-315-272-af2abqqe

Contact

info@inventflow.nl
+31 (0) 546 45 80 72

Datasheet

Qty.	Description
1	**NB 100-315/272 AF2ABQQE**

Product No.: 98974774

Non-self priming, single-stage centrifugal
Flange standard: pump according to EN 1092-2.

The pump is for the pumping of thin, clean or slightly contaminated liquids without abrasive or long-fibred solids.

The pump is directly coupled with an
Phase: IEC-flanged 3-phase AC motor.

The impeller is hydraulically as well as dynamically balanced.

The pump has the following characteristics:
- flange dimensions according to EN 1092-2,

Pump housing: - Cast iron volute pump housing,
- stainless steel shaft

Impeller: and Cast iron impeller and bronze wear rings,
- unbalanced mechanical shaft seal according to EN 12756.

Controls:
Frequency converter: NONE
Pressure sensor: N

Liquid:
Pumped liquid: Water
Liquid temperature range: -25 .. 120 °C
Selected liquid temperature: 20 °C
Density: 998.2 kg/m³

Technical:
Pump speed on which pump data are based: 970 rpm
Rated flow: 98.1 m³/h
Rated head: 9.9 m
Actual impeller diameter: 272 mm
Nominal impeller diameter: 315
Shaft seal arrangement: Single
Code for shaft seal: BQQE
Curve tolerance: ISO9906:2012 3B2
Bearing design: Standard

Materials:
Pump housing: Cast iron
EN-GJL-250
ASTM class 35
Wear ring: Brass
Impeller: Cast iron

Qty.	Description	
		EN-GJL-200
		ASTM class 30
	Shaft:	Stainless steel
		EN 1.4301
		AISI 304
	Internal pump house coating:	CED
	Installation:	
	Maximum ambient temperature:	55 °C
	Maximum operating pressure:	16 bar
	Pipe connection standard:	EN 1092-2
	Size of inlet connection:	DN 125
	Size of outlet connection:	DN 100
	Pressure rating for connection:	PN 16
	Bearing lubrication:	Grease
	Pump housing with feet:	Yes
	Support block:	N
	Electrical data:	
	Motor type:	SIEMENS
	IE Efficiency class:	IE3
	Rated power - P2:	4 kW
	Mains frequency:	50 Hz
	Rated voltage:	3 x 380-420D/660-725Y V
	Rated current:	9,10-8,20/5,20-4,80 A
	Starting current:	650-650 %
	Cos phi - power factor:	0.8
	Rated speed:	970 rpm
	Efficiency:	IE3 86,8%
	Motor efficiency at full load:	86.8-86.8 %
	Motor efficiency at 3/4 load:	87.7-87.7 %
	Motor efficiency at 1/2 load:	87.4-87.4 %
	Number of poles:	6
	Enclosure class (IEC 34-5):	IP55
	Insulation class (IEC 85):	F
	Motor No:	83W15213
	Others:	
	Minimum efficiency index, MEI ≥:	0.70
	Net weight:	157 kg
	Gross weight:	178 kg
	Shipping volume:	0.509 m³
	Country of origin:	HU
	Custom tariff no.:	84137051

98974774 NB 100-315/272 AF2ABQQE 50 Hz

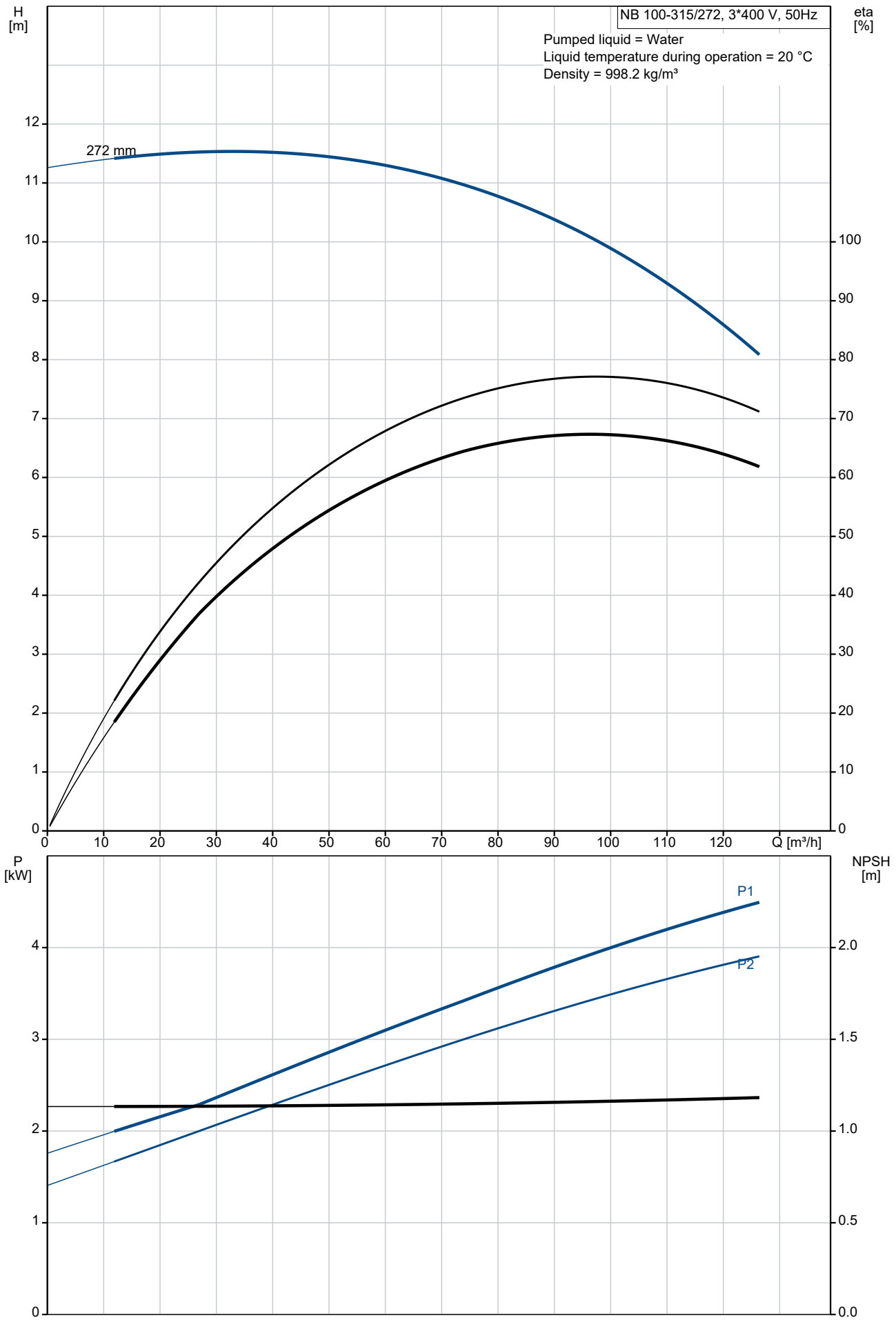

Description	Value
General information:	
Product name:	NB 100-315/272 AF2ABQQE
Product No:	98974774
EAN number:	5712604530689
Technical:	
Pump speed on which pump data are based:	970 rpm
Rated flow:	98.1 m³/h
Rated head:	9.9 m
Actual impeller diameter:	272 mm
Nominal impeller diameter:	315
Shaft seal arrangement:	Single
Shaft diameter:	32 mm
Code for shaft seal:	BQQE
Curve tolerance:	ISO9906:2012 3B2
Pump version:	A
Bearing design:	Standard
Materials:	
Pump housing:	Cast iron
Pump housing:	EN-GJL-250
Pump housing:	ASTM class 35
Wear ring:	Brass
Impeller:	Cast iron
Impeller:	EN-GJL-200
Impeller:	ASTM class 30
Shaft:	Stainless steel
Shaft:	EN 1.4301
Shaft:	AISI 304
Internal pump house coating:	CED
Material code:	A
Code for rubber:	E
Installation:	
Maximum ambient temperature:	55 °C
Maximum operating pressure:	16 bar
Pipe connection standard:	EN 1092-2
Size of inlet connection:	DN 125
Size of outlet connection:	DN 100
Pressure rating for connection:	PN 16
Bearing lubrication:	Grease
Pump housing with feet:	Yes
Support block:	N
Connect code:	F2
Liquid:	
Pumped liquid:	Water
Liquid temperature range:	-25 .. 120 °C
Selected liquid temperature:	20 °C
Density:	998.2 kg/m³
Electrical data:	
Motor type:	SIEMENS
IE Efficiency class:	IE3
Rated power - P2:	4 kW
Mains frequency:	50 Hz
Rated voltage:	3 x 380-420D/660-725Y V
Rated current:	9,10-8,20/5,20-4,80 A
Starting current:	650-650 %
Cos phi - power factor:	0.8
Rated speed:	970 rpm
Efficiency:	IE3 86,8%
Motor efficiency at full load:	86.8-86.8 %
Motor efficiency at 3/4 load:	87.7-87.7 %
Motor efficiency at 1/2 load:	87.4-87.4 %
Number of poles:	6
Enclosure class (IEC 34-5):	IP55

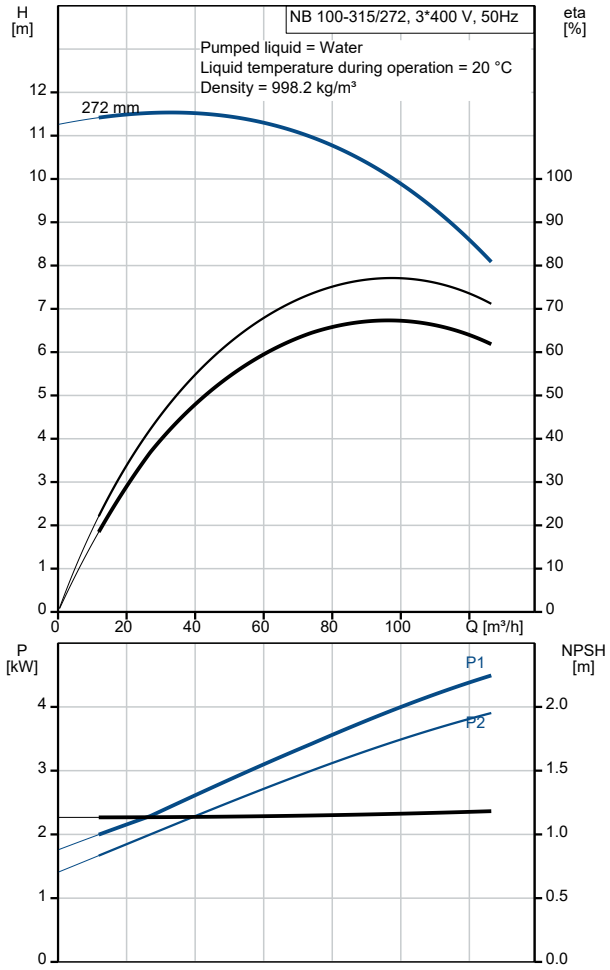

Description	Value
Insulation class (IEC 85):	F
Motor protec:	PTC
Motor No:	83W15213
Mount. design. acc. IEC 34-7:	IM B5
Controls:	
Frequency converter:	NONE
Pressure sensor:	N
Others:	
Minimum efficiency index, MEI ≥:	0.70
Net weight:	157 kg
Gross weight:	178 kg
Shipping volume:	0.509 m^3
Country of origin:	HU
Custom tariff no.:	84137051

98974774 NB 100-315/272 AF2ABQQE 50 Hz

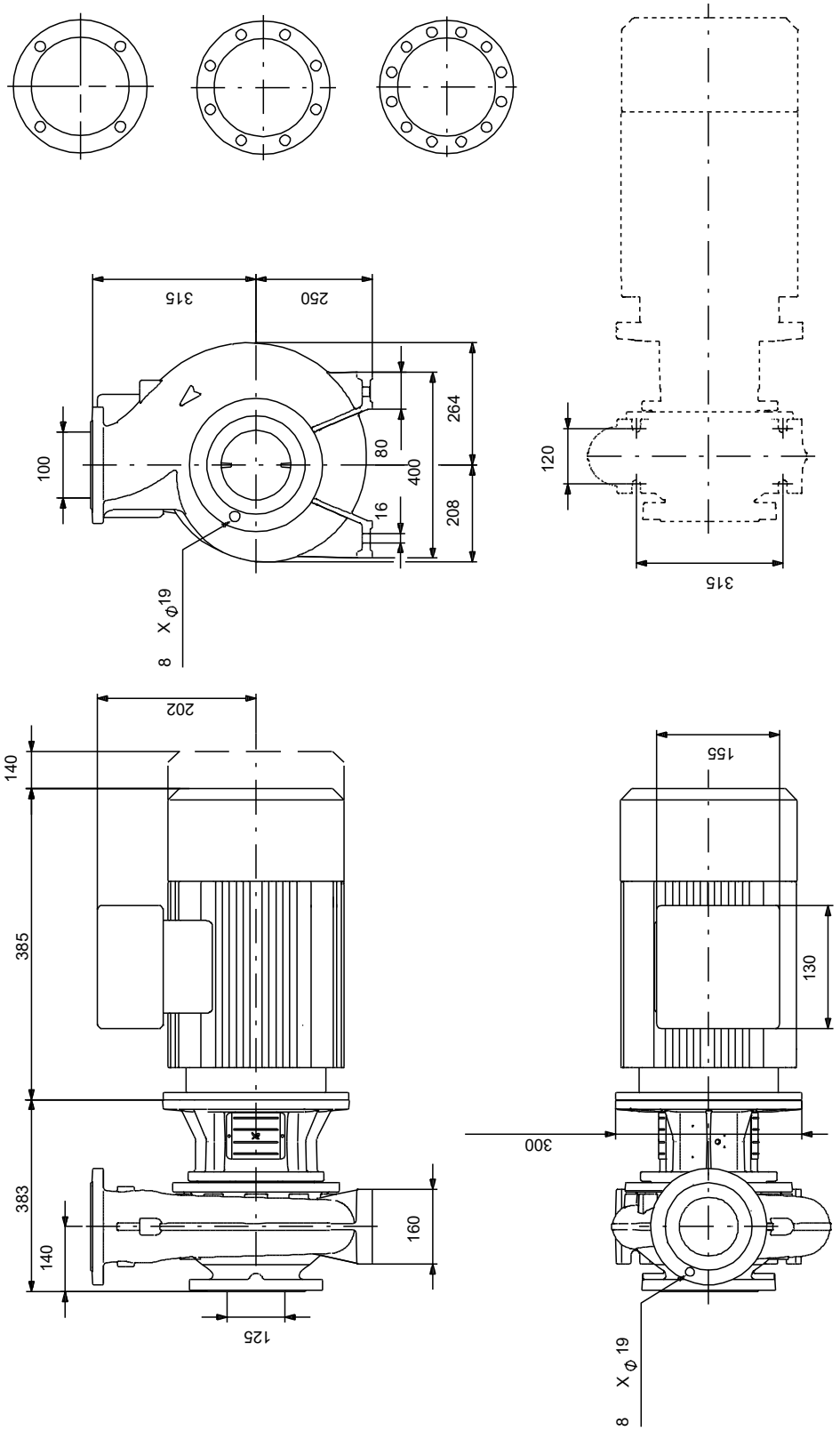

Note! All units are in [mm] unless others are stated.
Disclaimer: This simplified dimensional drawing does not show all details.

Spare parts NB 100-315/272, Product No. 98974774
Produced After 2101 (production year and week number)

	Pos	Omschrijving	Opmerking tekst	Classificatie Gegevens	Onderdeelnr.	Aantal	Eenheid
-		Bulk, Nut			92514631	1	pcs
	67	Nut		Thread: M18		5	
-		Bulk, o-ring			92547632	1	pcs
	72a	O-ring		Diameter: 329,79		5	
				Material type: EPDM			
				Thickness: 3,53			
-		Bulk, Plug vent			96620482	1	pcs
	18	Plug				5	
-		Bulk, Shaft seal			92514302	1	pcs
	105	Shaft seal				5	
-		Kit, coupling guard			96956222	1	pcs
	7a	Pan head screw				4	
	7	Coupling guard				2	
-		Kit, motor stool			99297306	1	pcs
		Motor stool				1	
	7	Coupling guard				2	
	18	Plug				1	
	28	Hex head screw		Length (mm): 40		4	
				Thread: M12			
	36	Nut		Thread: M12		18	
	77a	Cross recess Pan head screw				4	
-		Kit, nut			96939130	1	pcs
	11	Parallel key				1	
-	36	Nut				1	
	66a	Spring lock washer					1
	66	Washer					1
	67	Nut		Thread: M18			1
-		Kit, pump housing			95131735	1	pcs
-	6	Pump housing				1	
	26	Staybolt		Length (mm): 40			14
				Thread: M12			
	45	Wear ring					1
	20	Plug				2	
	36	Nut		Thread: M12		14	
-		Kit, stub shaft			96039358	1	pcs
	9	Socket set screw		Length (mm): 10		2	
				Thread: M8			
	11	Parallel key				1	
	51	Pump shaft				1	
	66a	Spring lock washer				1	
	66	Washer				1	
	67	Nut		Thread: M18		1	
+		Spare, O-ring			97757675	1	pcs
-		Spare, plug vent			98164277	1	pcs
	18	Plug				1	
-		Spare, shaft seal			98434906	1	pcs
	105	Shaft seal				1	
-		Spare, spacer for shaft seal			96591277	1	pcs
	105b	Spacer				1	
-		Spare, wear ring			99208807	1	pcs
	45	Wear ring				1	
-		Motor				1	pcs
	156	Spare, motor fan			98507836	1	
	151	Spare, motor fan cover			97644232	1	
	164a	Spare, Terminal box			98505711	1	
	49	Impeller			98897015	1	pcs