Inventflow: Grundfos A-partner

Grundfos NB 125-500/445 AF2ABQQE

Find the pump here:
https://inventflow.nl/en/pompenfilter/nb/grundfos-nb-125-500-445-af2abqqe

Contact

info@inventflow.nl
+31 (0) 546 45 80 72

Datasheet

Qty.	Description
1	**NB 125-500/445 AF2ABQQE**

Product No.: 98974814

Non-self priming, single-stage centrifugal
Flange standard: pump according to EN 1092-2.

The pump is for the pumping of thin, clean or slightly contaminated liquids without abrasive or long-fibred solids.

The pump is directly coupled with an
Phase: IEC-flanged 3-phase AC motor.

The impeller is hydraulically as well as dynamically balanced.

The pump has the following characteristics:
- flange dimensions according to EN 1092-2,

Pump housing: - Cast iron volute pump housing,
- stainless steel shaft

Impeller: and Cast iron impeller and bronze wear rings,
- unbalanced mechanical shaft seal according to EN 12756.

Controls:
Frequency converter: NONE
Pressure sensor: N

Liquid:
Pumped liquid: Water
Liquid temperature range: -25 .. 120 °C
Selected liquid temperature: 20 °C
Density: 998.2 kg/m³

Technical:
Pump speed on which pump data are based: 980 rpm
Rated flow: 179.7 m³/h
Rated head: 27.66 m
Actual impeller diameter: 445 mm
Nominal impeller diameter: 500
Shaft seal arrangement: Single
Code for shaft seal: BQQE
Curve tolerance: ISO9906:2012 3B
Bearing design: Standard

Materials:
Pump housing: Cast iron
EN-GJL-250
ASTM class 35
Wear ring: Brass
Impeller: Cast iron

Qty.	Description	
		EN-GJL-200
		ASTM class 30
	Shaft:	Stainless steel
		EN 1.4301
		AISI 304
	Internal pump house coating:	CED
	Installation:	
	Maximum ambient temperature:	55 °C
	Maximum operating pressure:	16 bar
	Pipe connection standard:	EN 1092-2
	Size of inlet connection:	DN 150
	Size of outlet connection:	DN 125
	Pressure rating for connection:	PN 16
	Bearing lubrication:	Grease
	Pump housing with feet:	Yes
	Support block:	N
	Electrical data:	
	Motor type:	SIEMENS
	IE Efficiency class:	IE3
	Rated power - P2:	22 kW
	Mains frequency:	50 Hz
	Rated voltage:	3 x 380-420D/660-725Y V
	Rated current:	45,0-42,5/26,0-24,6 A
	Starting current:	560-560 %
	Cos phi - power factor:	0.79
	Rated speed:	980 rpm
	Efficiency:	IE3 92,2%
	Motor efficiency at full load:	92.2-92.2 %
	Motor efficiency at 3/4 load:	93.0-93.0 %
	Motor efficiency at 1/2 load:	92.9-92.9 %
	Number of poles:	6
	Enclosure class (IEC 34-5):	IP55
	Insulation class (IEC 85):	F
	Motor No:	83W15430
	Others:	
	Minimum efficiency index, MEI ≥:	0.50
	Net weight:	624 kg
	Gross weight:	705 kg
	Shipping volume:	1.6 m³
	Country of origin:	HU
	Custom tariff no.:	84137051

98974814 NB 125-500/445 AF2ABQQE 50 Hz

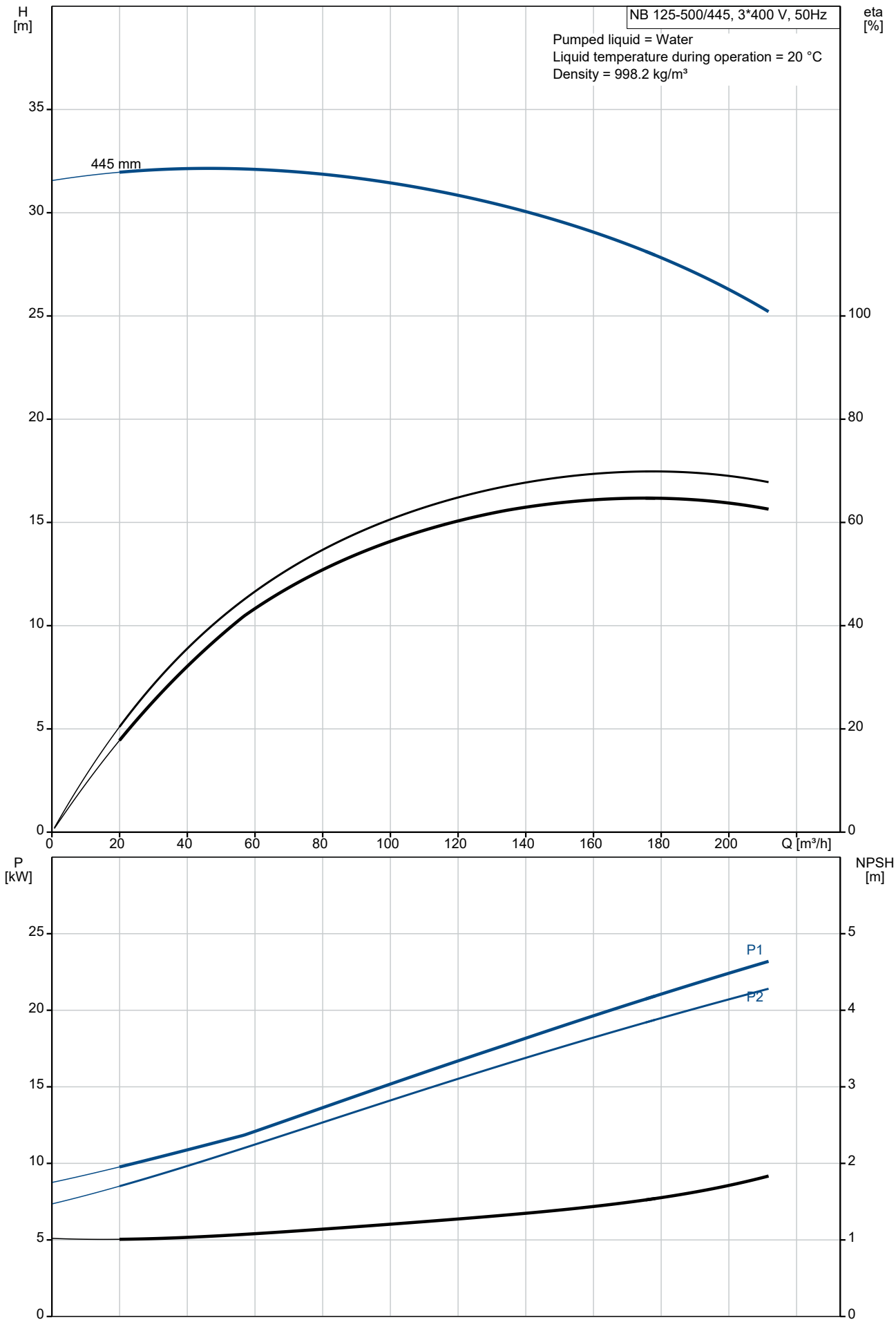

Description	Value
General information:	
Product name:	NB 125-500/445 AF2ABQQE
Product No:	98974814
EAN number:	5712604531587
Technical:	
Pump speed on which pump data are based:	980 rpm
Rated flow:	179.7 m³/h
Rated head:	27.66 m
Actual impeller diameter:	445 mm
Nominal impeller diameter:	500
Shaft seal arrangement:	Single
Shaft diameter:	60 mm
Code for shaft seal:	BQQE
Curve tolerance:	ISO9906:2012 3B
Pump version:	A
Bearing design:	Standard
Materials:	
Pump housing:	Cast iron
Pump housing:	EN-GJL-250
Pump housing:	ASTM class 35
Wear ring:	Brass
Impeller:	Cast iron
Impeller:	EN-GJL-200
Impeller:	ASTM class 30
Shaft:	Stainless steel
Shaft:	EN 1.4301
Shaft:	AISI 304
Internal pump house coating:	CED
Material code:	A
Code for rubber:	E
Installation:	
Maximum ambient temperature:	55 °C
Maximum operating pressure:	16 bar
Pipe connection standard:	EN 1092-2
Size of inlet connection:	DN 150
Size of outlet connection:	DN 125
Pressure rating for connection:	PN 16
Bearing lubrication:	Grease
Pump housing with feet:	Yes
Support block:	N
Connect code:	F2
Liquid:	
Pumped liquid:	Water
Liquid temperature range:	-25 .. 120 °C
Selected liquid temperature:	20 °C
Density:	998.2 kg/m³
Electrical data:	
Motor type:	SIEMENS
IE Efficiency class:	IE3
Rated power - P2:	22 kW
Mains frequency:	50 Hz
Rated voltage:	3 x 380-420D/660-725Y V
Rated current:	45,0-42,5/26,0-24,6 A
Starting current:	560-560 %
Cos phi - power factor:	0.79
Rated speed:	980 rpm
Efficiency:	IE3 92,2%
Motor efficiency at full load:	92.2-92.2 %
Motor efficiency at 3/4 load:	93.0-93.0 %
Motor efficiency at 1/2 load:	92.9-92.9 %
Number of poles:	6
Enclosure class (IEC 34-5):	IP55

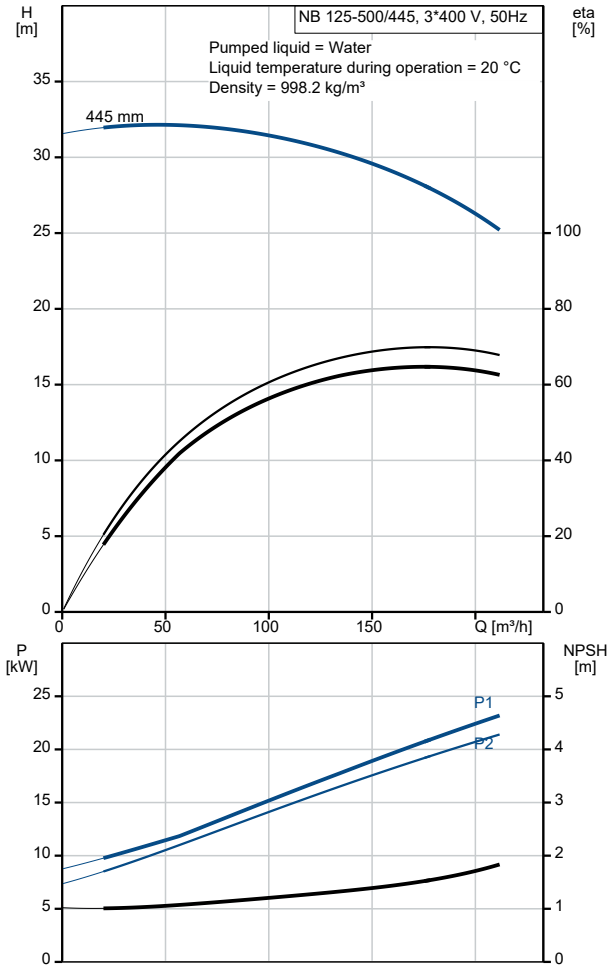

Description	Value
Insulation class (IEC 85):	F
Motor protec:	PTC
Motor No:	83W15430
Mount. design. acc. IEC 34-7:	IM B35
Controls:	
Frequency converter:	NONE
Pressure sensor:	N
Others:	
Minimum efficiency index, MEI ≥:	0.50
Net weight:	624 kg
Gross weight:	705 kg
Shipping volume:	1.6 m³
Country of origin:	HU
Custom tariff no.:	84137051

98974814 NB 125-500/445 AF2ABQQE 50 Hz

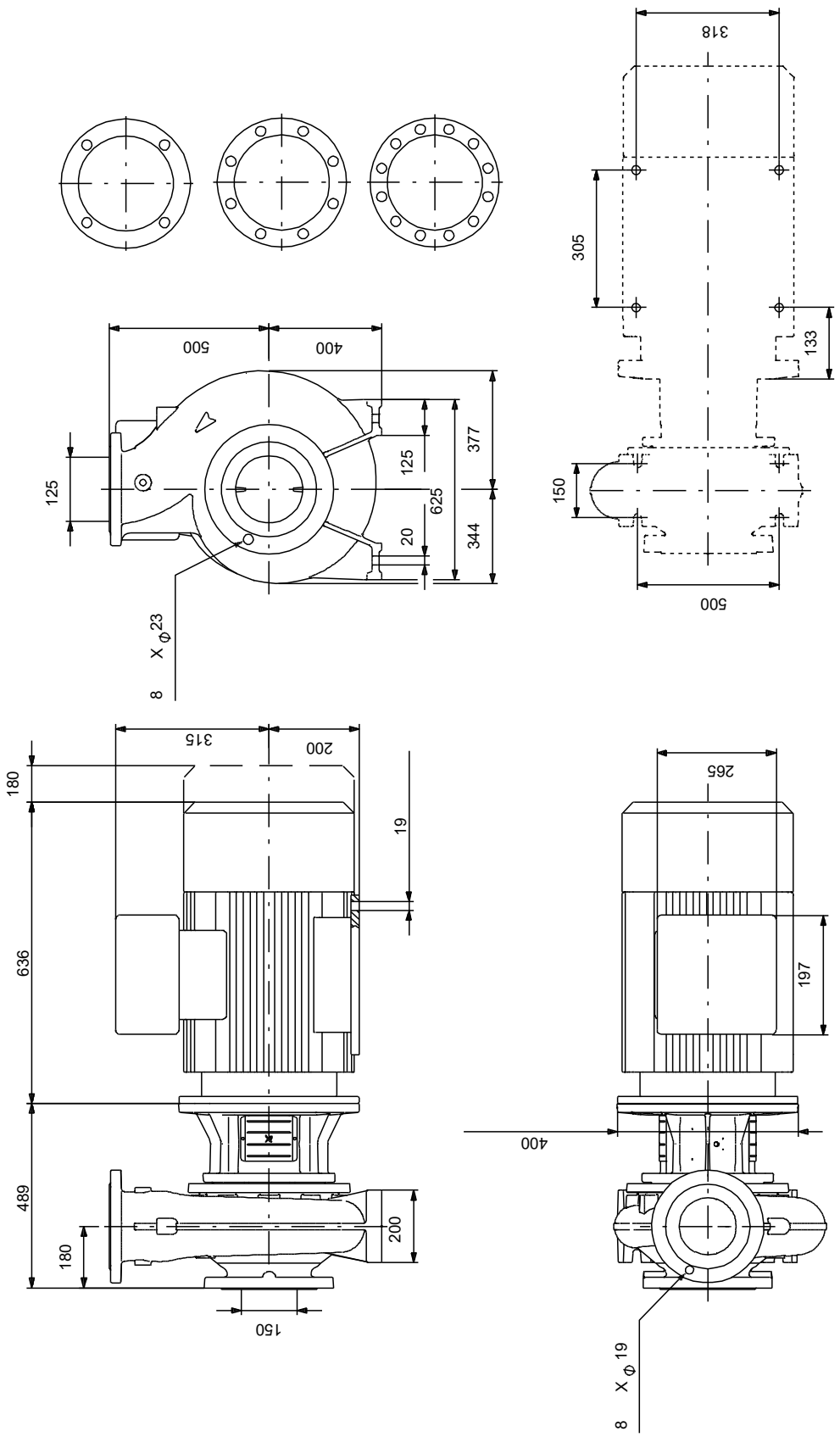

Note! All units are in [mm] unless others are stated.
Disclaimer: This simplified dimensional drawing does not show all details.

Spare parts NB 125-500/445, Product No. 98974814
Produced After 2101 (production year and week number)

Pos	Omschrijving	Opmerking tekst	Classificatie Gegevens	Onderdeelnr.	Aantal	Eenheid
-	Bulk, Nut			92514635	1	pcs
67	Nut		Thread: M33		5	
-	Bulk, o-ring			92547639	1	pcs
72a	O-ring		Material type: EPDM		5	
-	Bulk, Plug vent			96620482	1	pcs
18	Plug				5	
-	Bulk, Shaft seal			92514397	1	pcs
105	Shaft seal				5	
-	Kit, Bushing for motor			96306482	1	pcs
8.a	Bushing				1	
9	Socket set screw		Length (mm): 10		2	
			Thread: M8			
23	Hex socket head cap screw		Designation: DIN912		6	
			Length (mm): 20			
			Thread: M8			
-	Kit, coupling guard			96956222	1	pcs
7a	Pan head screw				4	
7	Coupling guard				2	
-	Kit, cover			98990977	1	pcs
18	Plug				1	
36a	Nut		Thread: M16		16	
36	Hex nut		Thread: M16		14	
77	Cover				1	
-	Kit, motor stool			96935203	1	pcs
1.a	Motor stool				1	
7	Coupling guard				2	
28	Hex head screw				4	
36	Hex nut		Thread: M16		18	
76a	Rivet				2	
77a	Pan head screw				4	
-	Kit, nut			96939137	1	pcs
11	Parallel key				2	
- 67	Nut				1	
66a	Spring lock washer				1	
66	Washer				1	
67	Nut		Thread: M33		1	
-	Kit, pump housing			96930842	1	pcs
6	Pump housing				1	
20	Plug				2	
36	Nut		Thread: M16		16	
-	Kit, pump shaft			96847128	1	pcs
11	Parallel key				2	
23	Hex socket head cap screw		Designation: DIN912		6	
			Length (mm): 20			
			Thread: M8			
51	Pump shaft				1	
66a	Spring lock washer				1	
66	Washer				1	
67	Nut		Thread: M33		1	
-	Spare, O-ring			97757679	1	pcs
72a	O-ring		Material type: EPDM		1	
-	Spare, plug vent			98164277	1	pcs
18	Plug				1	
-	Spare, shaft seal			98434945	1	pcs
105	Shaft seal				1	
-	Spare, wear ring			99208792	1	pcs
45	Wear ring				1	
-	Motor				1	pcs
156	Kit, fan			98505758	1	

Pos	Omschrijving	Opmerking tekst	Classificatie Gegevens	Onderdeelnr.	Aantal	Eenheid
151	Kit, fan cover			98062275	1	
	Kit, lubrication nipple			98062531	1	
176	Kit, terminal board			98062236	1	
164a	Kit, terminal box			98062262	1	