Inventflow: Grundfos A-partner

Grundfos NBE 125-200/219 EUP AF2ABQQE

Find the pump here:
https://inventflow.nl/en/pompenfilter/nbe/grundfos-nbe-125-200-219-eup-af2abqqe

Contact

info@inventflow.nl
+31 (0) 546 45 80 72

Datasheet

Qty.	Description
1	**NBE 125-200/219 EUP AF2ABQQE**

Note! Product picture may differ from actual product

Product No.: 98975353

Non-self priming, single-stage centrifugal
Flange standard: pump according to EN 1092-2.

The pump is for the pumping of thin, clean or slightly contaminated liquids without abrasive or long-fibred solids.

The impeller is hydraulically as well as dynamically balanced.

The pump has the following characteristics:
- flange dimensions according to EN 1092-2,

Pump housing: - Cast iron volute pump housing,
- stainless steel shaft

Impeller: and Cast iron impeller and bronze wear rings,
- unbalanced mechanical shaft seal according to EN 12756.

The pump is fitted with an IEC-flanged three-phase MGE motor with frequency converter and PI-controller integrated in the motor terminal box. No additional motor protection is required, as both motor and electronics are protected by integrated overload and temperature protection.

An external sensor can be connected if controlled pump operation based on for example flow, differential pressure or temperature is required.

A control panel enables setting of required setpoint as well as setting of pump to MIN or MAX operation or to STOP. The control panel has indicator lights for "Operation" and "Fault".

Communication with the pump is possible by means of Grundfos R100 Remote Control enabling further settings as well as reading out of a number of parameters such as "Actual value", "Speed", "Power input" and total "Power consumption".

The terminal box holds terminals for the connection of:
- pump start/stop (potential-free contact),
- external remote setpoint setting via analog signal, 0 - 5 V, 0 - 10 V, 0(4) - 20 mA,
- 5 V voltage supply for setpoint potentiometer, Imax = 5 mA,
- sensor, 0 - 5 V, 0 - 10 V, 0(4) - 20 mA,

Qty.	Description

- 24 V voltage supply for sensor, Imax = 40 mA,
- input for forced control to MIN or MAX (potential-free contact),
- potential-free fault signal relay with changeover contact,
- RS485 GENIbus.

Controls:

Frequency converter:	Built-in
Pressure sensor:	N

Liquid:

Pumped liquid:	Water
Liquid temperature range:	-25 .. 120 °C
Selected liquid temperature:	20 °C
Density:	998.2 kg/m³

Technical:

Pump speed on which pump data are based:	1460 rpm
Rated flow:	257.8 m³/h
Rated head:	12.07 m
Actual impeller diameter:	219 mm
Nominal impeller diameter:	200
Shaft seal arrangement:	Single
Code for shaft seal:	BQQE
Curve tolerance:	ISO9906:2012 3B
Bearing design:	Standard

Materials:

Pump housing:	Cast iron EN-GJL-250 ASTM class 35
Wear ring:	Brass
Impeller:	Cast iron EN-GJL-200 ASTM class 30
Shaft:	Stainless steel EN 1.4301 AISI 304
Internal pump house coating:	CED

Installation:

Maximum ambient temperature:	40 °C
Maximum operating pressure:	16 bar
Pipe connection standard:	EN 1092-2
Size of inlet connection:	DN 150
Size of outlet connection:	DN 125
Pressure rating for connection:	PN 16
Bearing lubrication:	Grease
Pump housing with feet:	Yes
Support block:	N

Electrical data:

IE Efficiency class:	IE3
Rated power - P2:	11 kW
Mains frequency:	50 Hz
Rated voltage:	3 x 380-480 V
Rated current:	22.0-17.8 A
Cos phi - power factor:	0.91-0.90
Rated speed:	240-1750 rpm
Efficiency:	IE3 91,4%
Motor efficiency at full load:	91.4 %
Number of poles:	4
Enclosure class (IEC 34-5):	IP55
Insulation class (IEC 85):	F

Qty.	Description
	Motor No: 86906207
	Others:
	Minimum efficiency index, MEI ≥: 0.70
	Net weight: 236 kg
	Gross weight: 269 kg
	Shipping volume: 0.951 m³
	Country of origin: HU
	Custom tariff no.: 84137051

98975353 NBE 125-200/219 EUP AF2ABQQE 50 Hz

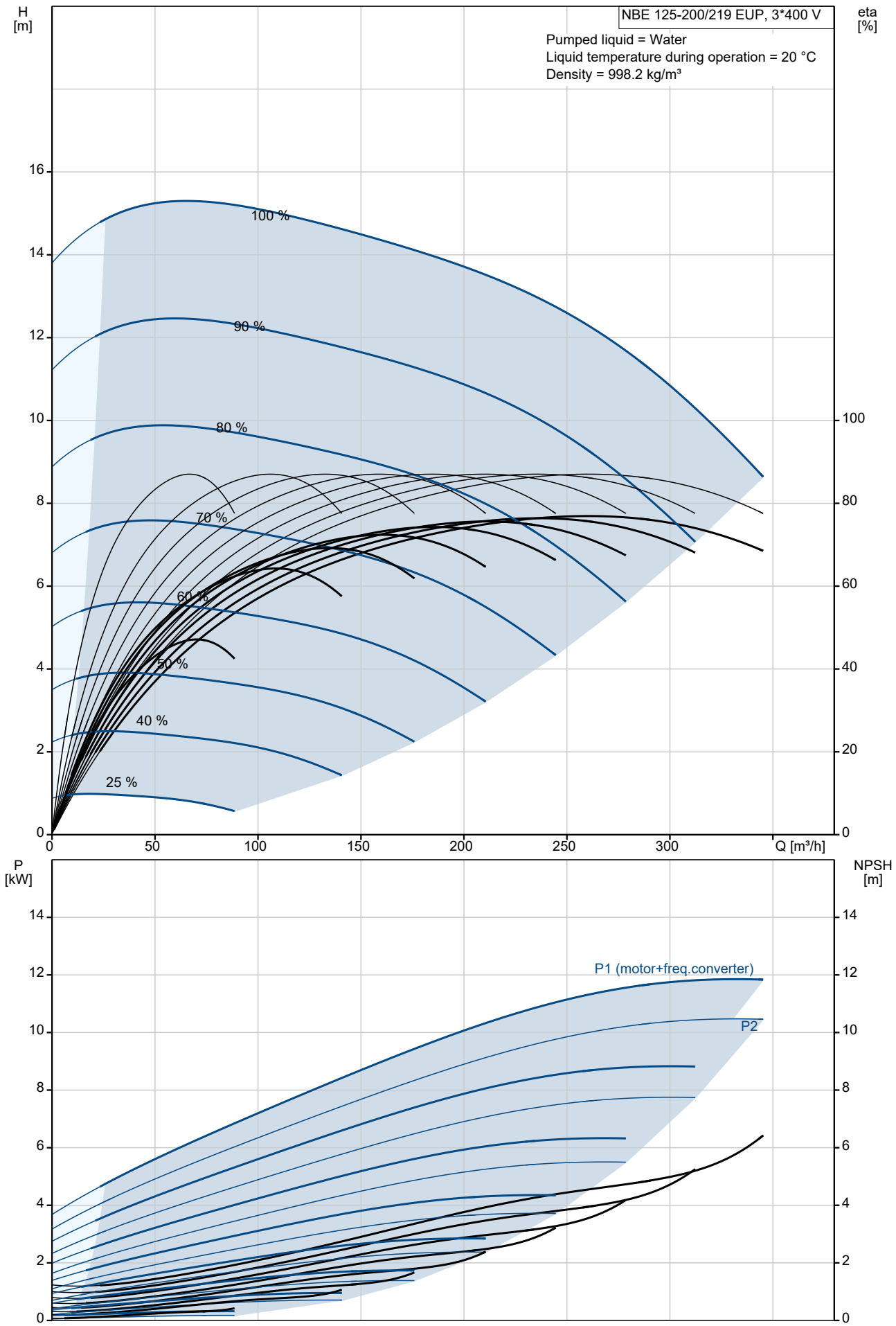

Description	Value
General information:	
Product name:	NBE 125-200/219 EUP AF2ABQQE
Product No:	98975353
EAN number:	5712604540701
Technical:	
Pump speed on which pump data are based:	1460 rpm
Rated flow:	257.8 m³/h
Rated head:	12.07 m
Actual impeller diameter:	219 mm
Nominal impeller diameter:	200
Shaft seal arrangement:	Single
Shaft diameter:	32 mm
Code for shaft seal:	BQQE
Curve tolerance:	ISO9906:2012 3B
Pump version:	A
Bearing design:	Standard
Materials:	
Pump housing:	Cast iron
Pump housing:	EN-GJL-250
Pump housing:	ASTM class 35
Wear ring:	Brass
Impeller:	Cast iron
Impeller:	EN-GJL-200
Impeller:	ASTM class 30
Shaft:	Stainless steel
Shaft:	EN 1.4301
Shaft:	AISI 304
Internal pump house coating:	CED
Material code:	A
Code for rubber:	E
Installation:	
Maximum ambient temperature:	40 °C
Maximum operating pressure:	16 bar
Pipe connection standard:	EN 1092-2
Size of inlet connection:	DN 150
Size of outlet connection:	DN 125
Pressure rating for connection:	PN 16
Bearing lubrication:	Grease
Pump housing with feet:	Yes
Support block:	N
Connect code:	F2
Liquid:	
Pumped liquid:	Water
Liquid temperature range:	-25 .. 120 °C
Selected liquid temperature:	20 °C
Density:	998.2 kg/m³
Electrical data:	
IE Efficiency class:	IE3
Rated power - P2:	11 kW
Mains frequency:	50 Hz
Rated voltage:	3 x 380-480 V
Rated current:	22.0-17.8 A
Cos phi - power factor:	0.91-0.90
Rated speed:	240-1750 rpm
Efficiency:	IE3 91,4%
Motor efficiency at full load:	91.4 %
Number of poles:	4
Enclosure class (IEC 34-5):	IP55
Insulation class (IEC 85):	F
Motor protec:	YES
Motor No:	86906207
Mount. design. acc. IEC 34-7:	IM B35

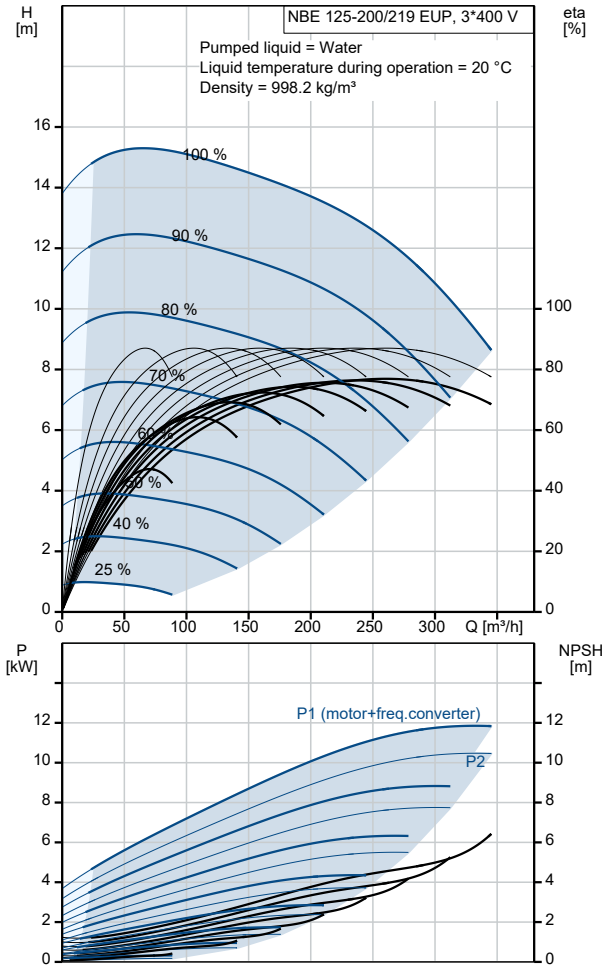

Description	Value
Controls:	
Control panel:	Standard
Function Module:	PUMP I/O
Frequency converter:	Built-in
Pressure sensor:	N
Others:	
Minimum efficiency index, MEI ≥:	0.70
Net weight:	236 kg
Gross weight:	269 kg
Shipping volume:	0.951 m³
Country of origin:	HU
Custom tariff no.:	84137051

98975353 NBE 125-200/219 EUP AF2ABQQE 50 Hz

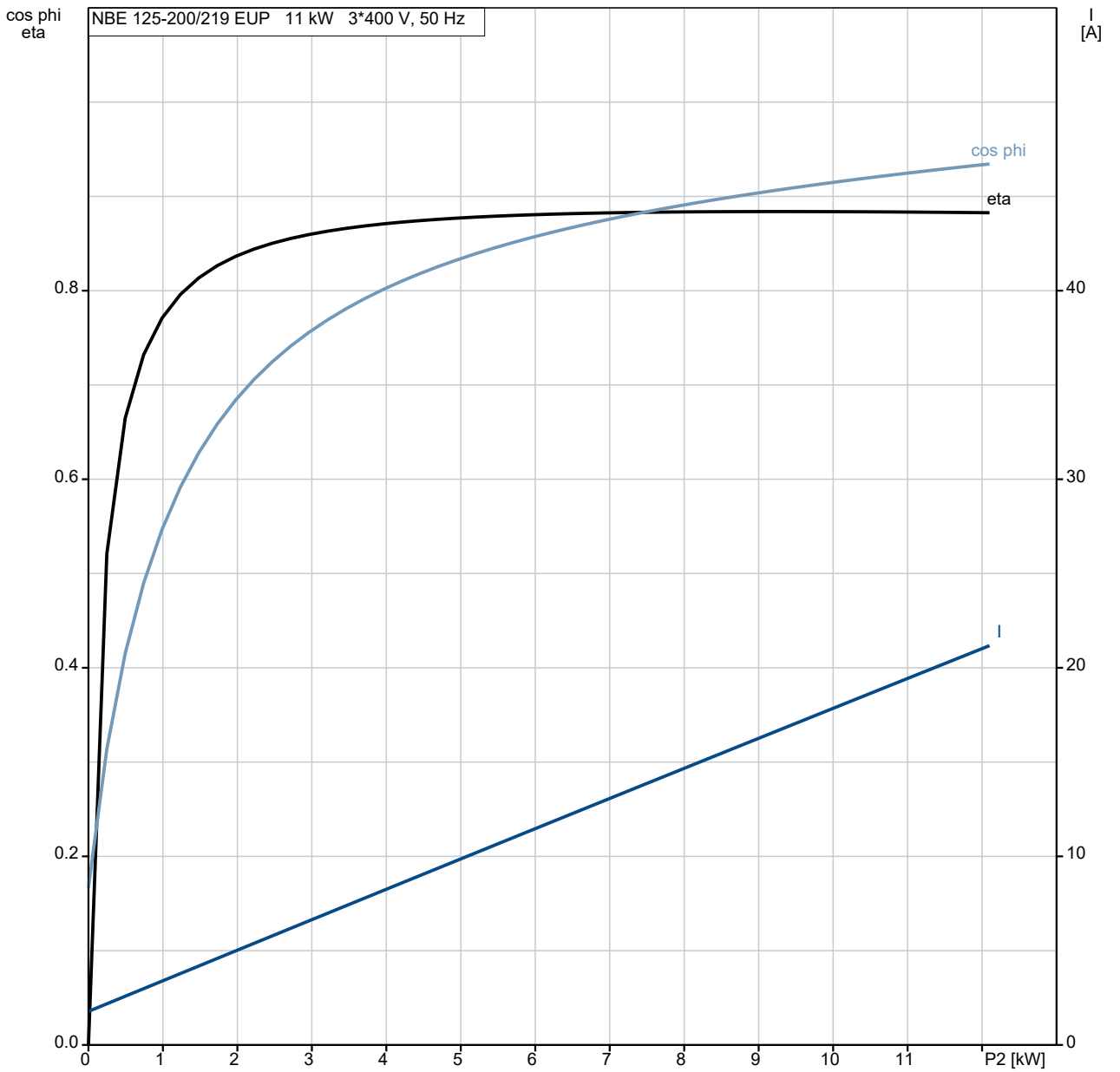

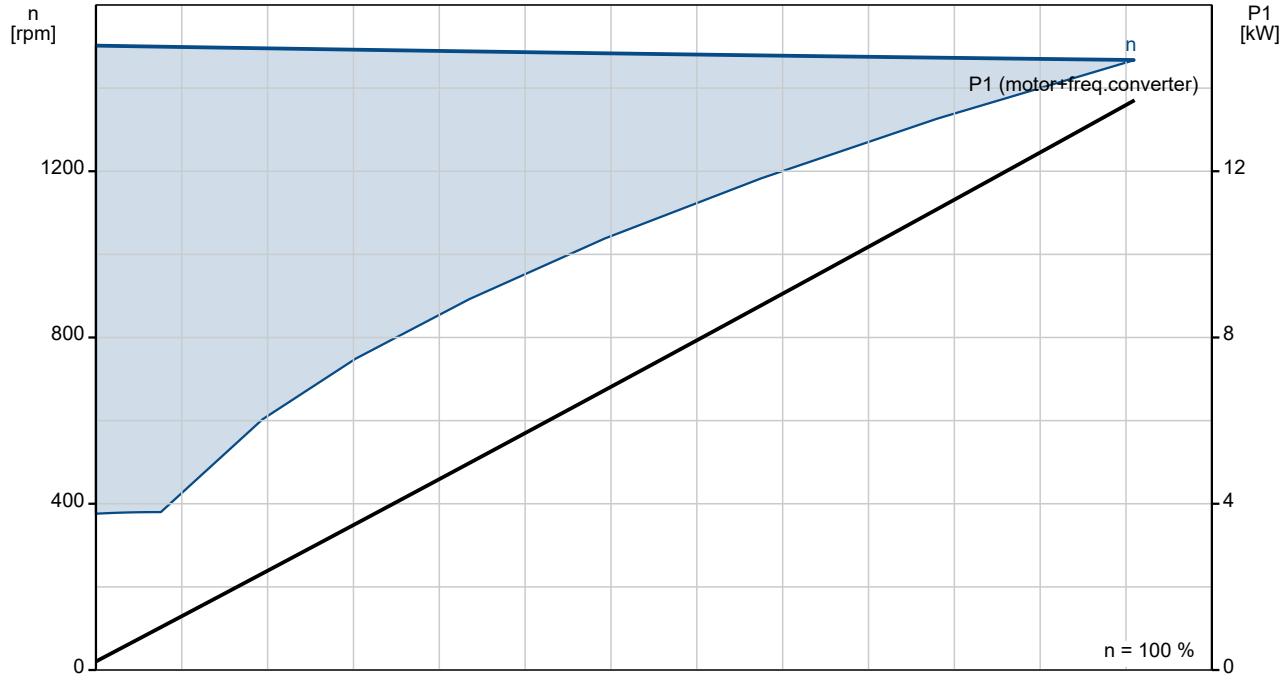

98975353 NBE 125-200/219 EUP AF2ABQQE 50 Hz

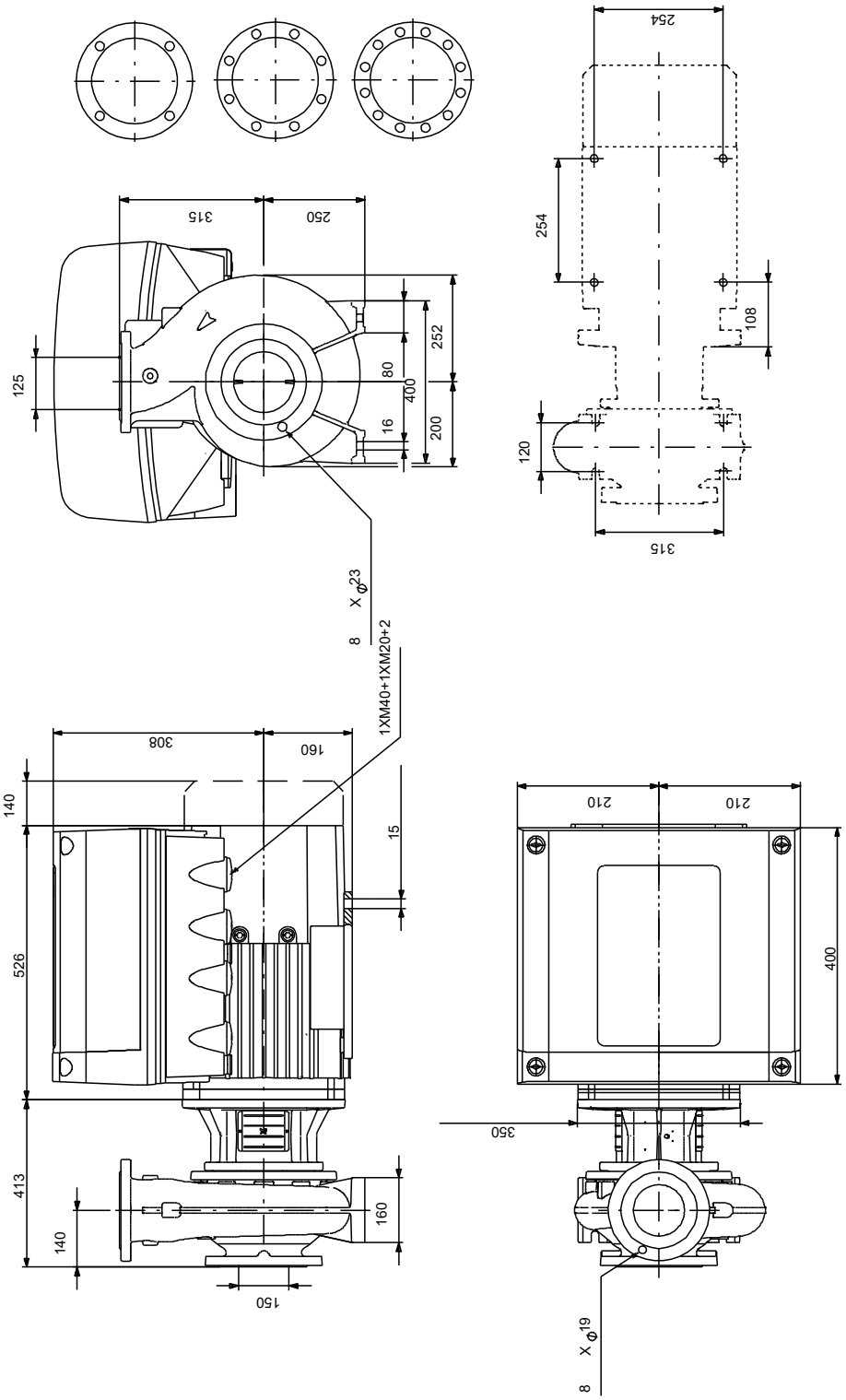

Note! All units are in [mm] unless others are stated.
Disclaimer: This simplified dimensional drawing does not show all details.

Spare parts NBE 125-200/219 EUP, Product No. 98975353
Produced After 2101 (production year and week number)

Pos	Omschrijving	Opmerking tekst	Classificatie Gegevens	Onderdeelnr.	Aantal	Eenheid
-	Bulk, Nut			92514631	1	pcs
67	Nut		Thread: M18		5	
-	Bulk, o-ring			92547617	1	pcs
72.a	O-ring		Diameter: 221,84		5	
			Material type: EPDM			
			Thickness: 3,53			
-	Bulk, Plug vent			96620482	1	pcs
18	Plug				5	
-	Bulk, Shaft seal			92514302	1	pcs
105	Shaft seal				5	
-	Kit, coupling guard			96809945	1	pcs
7a	Pan head screw				4	
7	Coupling guard				2	
-	Kit, cover			98990962	1	pcs
18	Plug				1	
36	Nut		Thread: M10		8	
77	Cover				1	
-	Kit, motor stool			95131785	1	pcs
1a	Motor stool				1	
7	Coupling guard				2	
28	Hex head screw				4	
36	Hex nut		Thread: M16		4	
36	Nut		Thread: M10		12	
77a	Pan head screw				4	
-	Kit, nut			96939130	1	pcs
11	Parallel key				1	
- 36	Nut				1	
66a	Spring lock washer					1
66	Washer					1
67	Nut		Thread: M18			1
-	Kit, pump housing			98776465	1	pcs
6	Pump housing				1	
20	Plug				2	
36	Nut		Thread: M10		8	
-	Kit, stub shaft			96039359	1	pcs
9	Socket set screw		Length (mm): 10		2	
			Thread: M8			
11	Parallel key				1	
51	Pump shaft				1	
66a	Spring lock washer				1	
66	Washer				1	
67	Nut		Thread: M18		1	
+	Spare, O-ring			97757671	1	pcs
-	Spare, plug vent			98164277	1	pcs
18	Plug				1	
-	Spare, shaft seal			98434906	1	pcs
105	Shaft seal				1	
-	Spare, spacer for shaft seal			96591277	1	pcs
105b	Spacer				1	
-	Spare, wear ring			99208807	1	pcs
45	Wear ring				1	
-	Motor				1	pcs
-	Kit, bearing cpl.			96796674	1	
32b	Waved washer					1
111	Ball bearing					1
154	Ball bearing					1
157	O-ring					1
-	Kit, bearing plate			96796664	1	

Pos	Omschrijving	Opmerking tekst	Classificatie Gegevens	Onderdeelnr.	Aantal	Eenheid
155.a	Bearing cover				1	
208a	Gasket				3	
208	Hex socket head cap screw		Designation: DIN912		3	
			Length (mm): 40			
			Thread: M5			
-	Kit, connector plugs			96348923	1	
	Connector plug 5-pole				1	
	Connector plug 4-pole				1	
	Connector plug 4-pole				1	
	Connector plug 3-pole				1	
	Connector plug 3-pole				1	
	Connector plug 3-pole				1	
	Connector plug 3-pole				1	
	Connector plug				1	
- 273	Kit, control board			96348918	1	
	Service kit instruction				1	
	Controlboard				1	
-	Kit, eyebolt			96796712	1	
189	Eyebolt				2	
-	Kit, fan cover			96830826	1	
151	Fan cover				1	
152.a	Rubber bush				4	
152	Hex head cap screw				4	
196	Diaphragm				1	
-	Kit, flange			96796662	1	
156.b	Flange				1	
159.b	Seal ring				1	
185.b	Nut				4	
185	Hex socket head cap screw				4	
186	Drain plug				4	
195.a	Grease nipple				1	
-	Kit, foot			96796666	1	
191	Foot				2	
192	Hex socket head cap screw				4	
194	Lock washer				4	
194	Nut				4	
-	Kit, funct. module - E-pump			96348929	1	
263	MGE large I/O add-on				1	
-	Kit, funct. module -Geni/RS485			96348932	1	
263	Add-on module, cpl. w/plugs				1	
-	Kit, gaskets			96798508	1	
184	O-ring		Diameter: 235		2	
275	Kit, inverter board			96348919	1	
-	Kit, key			96279873	1	
40	Parallel key		Designation: DS96 DIN 6885		1	
			Dimension: 12X8X90			
-	Kit, lubrication nipple			96796671	1	
195.b	Grease nipple				2	
195.a	Grease nipple				1	
-	Kit, motor			96844397	1	
	Flex insulation				3	
	EMC filter				1	
	Cover cpl.				1	
	Fan				1	
	Motor				1	
99a	Retaining ring				1	
151	Fan cover				1	

Pos	Omschrijving	Opmerking tekst	Classificatie Gegevens	Onderdeelnr.	Aantal	Eenheid
152.a	Rubber bush					4
152	Hex head cap screw					4
177	Torx Screw					1
185.b	Nut					4
185.b	Nut					4
191	Foot					2
192	Hex socket head cap screw					4
194	Lock washer					4
196	Diaphragm					1
273a	Pan head thread forming screw					4
-	Kit, ND-end shield cpl.			96796669	1	
32b	Waved washer					1
156.a	End shield NDE					1
157	O-ring					1
159	V-ring					1
185.c	Nut					4
185.a	Hex socket head cap screw					4
195.b	Grease nipple					1
-	Kit, opr. panel			96348924	1	
259	Operation panel					1
274	Kit, rectifier board			96348921	1	
- 251	Kit, terminal box			96348913	1	
164	Cover cpl.					1
166	Pan head thread forming screw					5
251	Terminal box cpl.					1
277	Blind cover					1
283	Motor cover cpl.					1
284	Cover					1
-	Kit, varistor			96348917	1	
279.b	Pan head thread forming screw					2
279	Varistor					1
49	Impeller			99010594	1	pcs