Inventflow: Grundfos A-partner

Grundfos NB 40-315/336 ASF2ABQQE

Find the pump here:
https://inventflow.nl/en/pompenfilter/nb/grundfos-nb-40-315-336-asf2abqqe

Contact

info@inventflow.nl
+31 (0) 546 45 80 72

Datasheet

Qty.	Description
1	**NB 40-315/336 ASF2ABQQE**

Product No.: 98975676

Non-self priming, single-stage centrifugal
Flange standard: pump according to EN 1092-2.

The pump is for the pumping of thin, clean or slightly contaminated liquids without abrasive or long-fibred solids.

The pump is directly coupled with an
Phase: IEC-flanged 3-phase AC motor.

The impeller is hydraulically as well as dynamically balanced.

The pump has the following characteristics:
- flange dimensions according to EN 1092-2,

Pump housing: - Cast iron volute pump housing,
- stainless steel shaft

Impeller: and Cast iron impeller and bronze wear rings,
- unbalanced mechanical shaft seal according to EN 12756.

Controls:
Frequency converter: NONE
Pressure sensor: N

Liquid:
Pumped liquid: Water
Liquid temperature range: -25 .. 120 °C
Selected liquid temperature: 20 °C
Density: 998.2 kg/m³

Technical:
Pump speed on which pump data are based: 2960 rpm
Rated flow: 46.95 m³/h
Rated head: 129.8 m
Actual impeller diameter: 336 mm
Nominal impeller diameter: 315
Shaft seal arrangement: Single
Code for shaft seal: BQQE
Curve tolerance: ISO9906:2012 3B
Bearing design: Standard

Materials:
Pump housing: Cast iron
EN-GJL-250
ASTM class 35
Wear ring: Brass
Impeller: Cast iron

Qty.	Description	
		EN-GJL-200
		ASTM class 30
	Shaft:	Stainless steel
		EN 1.4301
		AISI 304
	Internal pump house coating:	CED
	Installation:	
	Maximum ambient temperature:	55 °C
	Maximum operating pressure:	16 bar
	Pipe connection standard:	EN 1092-2
	Size of inlet connection:	DN 65
	Size of outlet connection:	DN 40
	Pressure rating for connection:	PN 16
	Bearing lubrication:	Grease
	Pump housing with feet:	Yes
	Support block:	Y
	Electrical data:	
	Motor type:	SIEMENS
	IE Efficiency class:	IE3
	Rated power - P2:	45 kW
	Mains frequency:	50 Hz
	Rated voltage:	3 x 380-420D/660-725Y V
	Rated current:	81,0-74,0/47,0-43,0 A
	Starting current:	690-690 %
	Cos phi - power factor:	0.89
	Rated speed:	2960 rpm
	Efficiency:	IE3 94,0%
	Motor efficiency at full load:	94.0-94.0 %
	Motor efficiency at 3/4 load:	94.5-94.5 %
	Motor efficiency at 1/2 load:	94.4-94.4 %
	Number of poles:	2
	Enclosure class (IEC 34-5):	IP55
	Insulation class (IEC 85):	F
	Motor No:	99032149
	Others:	
	Minimum efficiency index, MEI ≥:	0.70
	Net weight:	453 kg
	Gross weight:	511 kg
	Shipping volume:	1.11 m³
	Country of origin:	HU
	Custom tariff no.:	84137051

98975676 NB 40-315/336 ASF2ABQQE 50 Hz

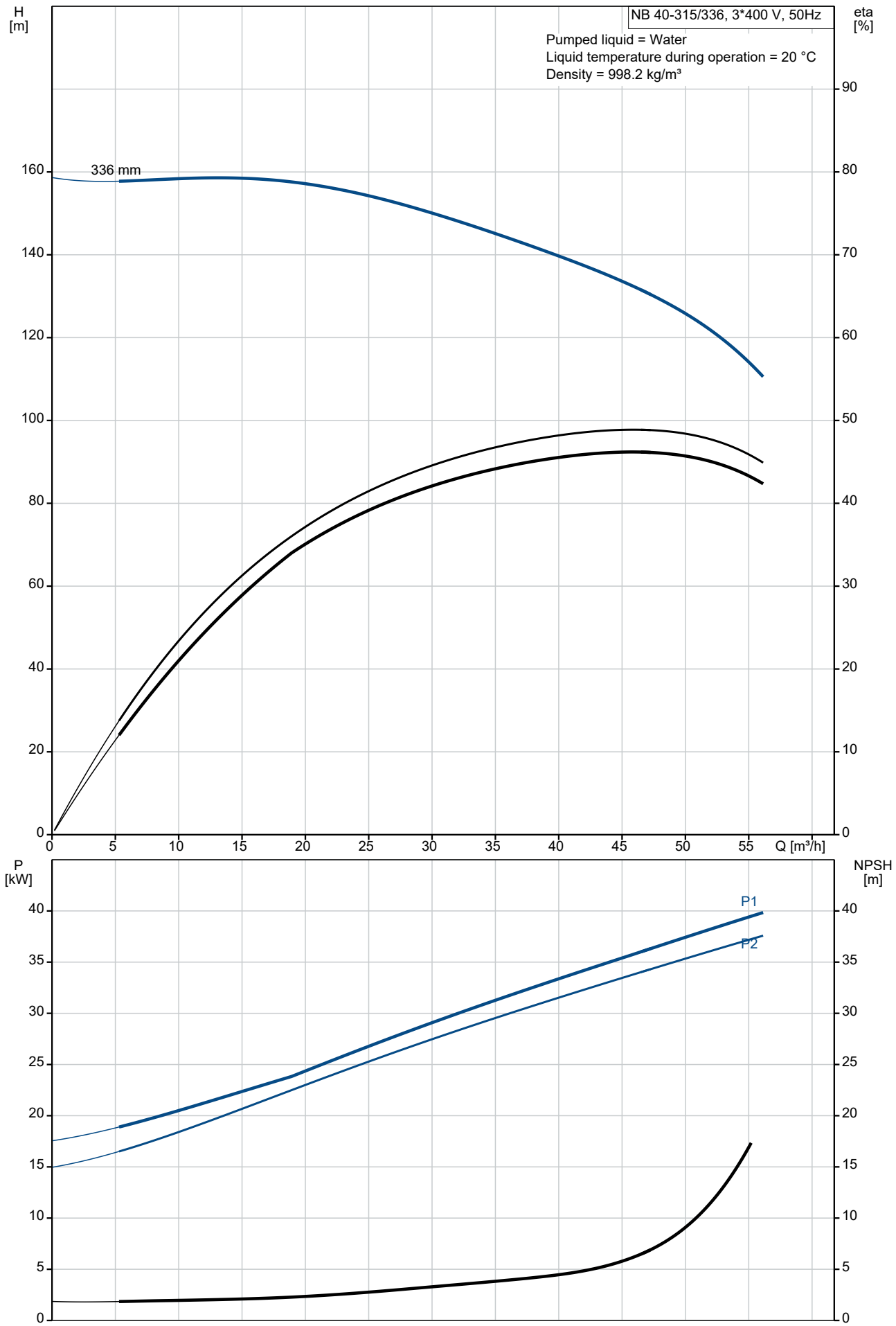

Description	Value
General information:	
Product name:	NB 40-315/336 ASF2ABQQE
Product No:	98975676
EAN number:	5712604547212
Technical:	
Pump speed on which pump data are based:	2960 rpm
Rated flow:	46.95 m³/h
Rated head:	129.8 m
Actual impeller diameter:	336 mm
Nominal impeller diameter:	315
Shaft seal arrangement:	Single
Shaft diameter:	32 mm
Code for shaft seal:	BQQE
Curve tolerance:	ISO9906:2012 3B
Pump version:	AS
Bearing design:	Standard
Materials:	
Pump housing:	Cast iron
Pump housing:	EN-GJL-250
Pump housing:	ASTM class 35
Wear ring:	Brass
Impeller:	Cast iron
Impeller:	EN-GJL-200
Impeller:	ASTM class 30
Shaft:	Stainless steel
Shaft:	EN 1.4301
Shaft:	AISI 304
Internal pump house coating:	CED
Material code:	A
Code for rubber:	E
Installation:	
Maximum ambient temperature:	55 °C
Maximum operating pressure:	16 bar
Pipe connection standard:	EN 1092-2
Size of inlet connection:	DN 65
Size of outlet connection:	DN 40
Pressure rating for connection:	PN 16
Bearing lubrication:	Grease
Pump housing with feet:	Yes
Support block:	Y
Connect code:	F2
Liquid:	
Pumped liquid:	Water
Liquid temperature range:	-25 .. 120 °C
Selected liquid temperature:	20 °C
Density:	998.2 kg/m³
Electrical data:	
Motor type:	SIEMENS
IE Efficiency class:	IE3
Rated power - P2:	45 kW
Mains frequency:	50 Hz
Rated voltage:	3 x 380-420D/660-725Y V
Rated current:	81,0-74,0/47,0-43,0 A
Starting current:	690-690 %
Cos phi - power factor:	0.89
Rated speed:	2960 rpm
Efficiency:	IE3 94,0%
Motor efficiency at full load:	94.0-94.0 %
Motor efficiency at 3/4 load:	94.5-94.5 %
Motor efficiency at 1/2 load:	94.4-94.4 %
Number of poles:	2
Enclosure class (IEC 34-5):	IP55

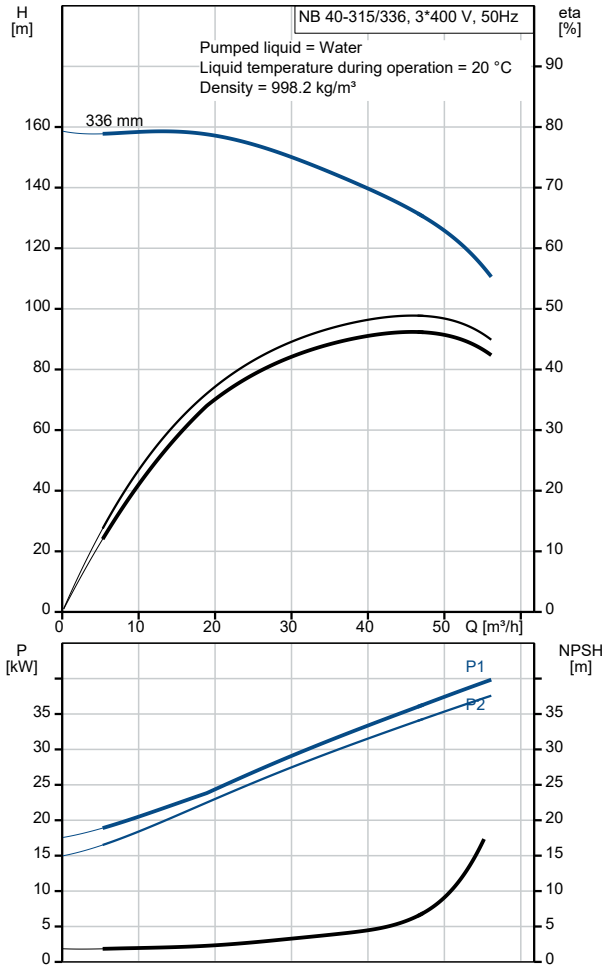

Description	Value
Insulation class (IEC 85):	F
Motor protec:	PTC
Motor No:	99032149
Mount. design. acc. IEC 34-7:	IM B35
Controls:	
Frequency converter:	NONE
Pressure sensor:	N
Others:	
Minimum efficiency index, MEI ≥:	0.70
Net weight:	453 kg
Gross weight:	511 kg
Shipping volume:	1.11 m^3
Country of origin:	HU
Custom tariff no.:	84137051

98975676 NB 40-315/336 ASF2ABQQE 50 Hz

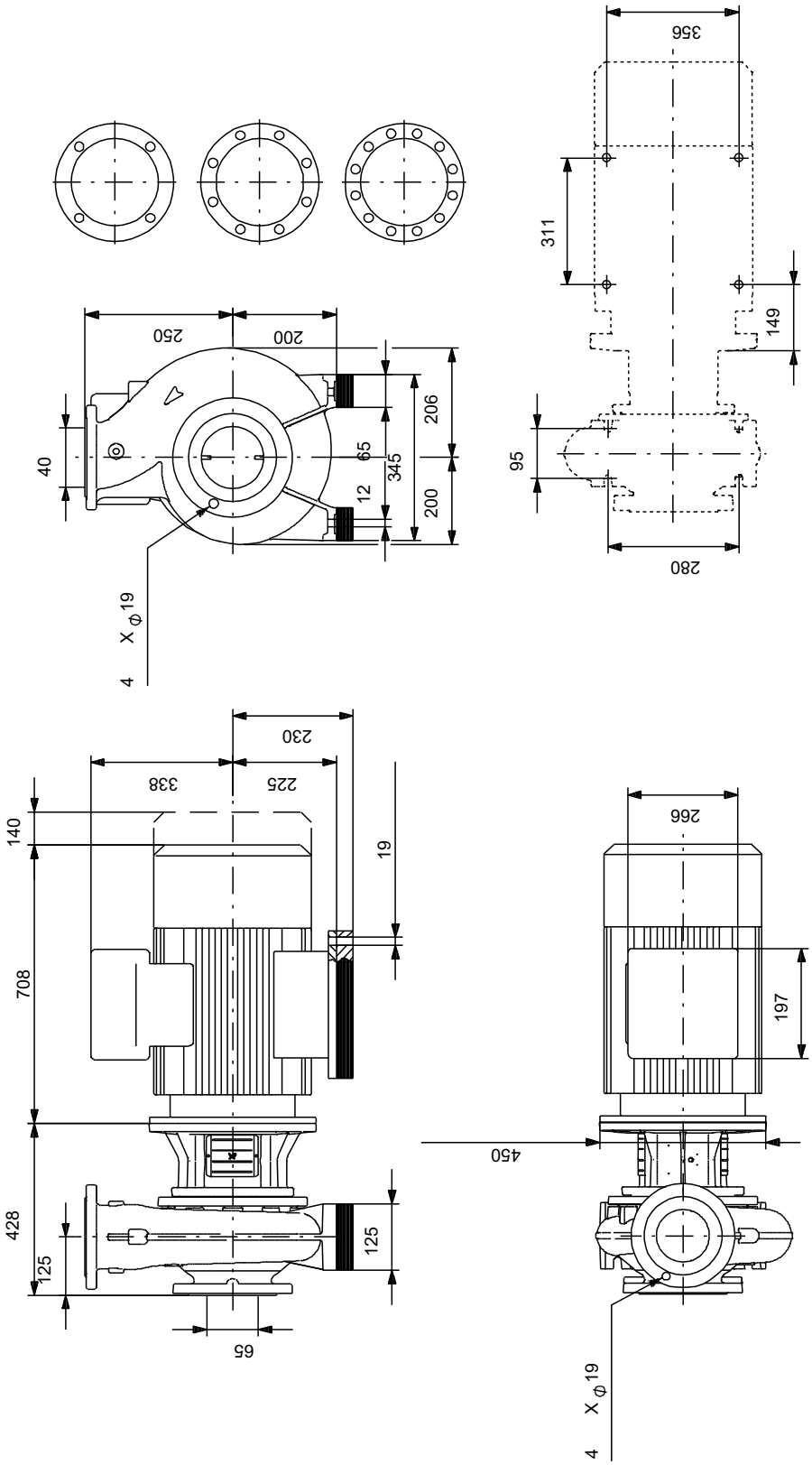

Note! All units are in [mm] unless others are stated.
Disclaimer: This simplified dimensional drawing does not show all details.

Spare parts NB 40-315/336, Product No. 98975676
Produced After 2101 (production year and week number)

Pos	Omschrijving	Opmerking tekst	Classificatie Gegevens	Onderdeelnr.	Aantal	Eenheid
-	Bulk, Nut			92514631	1	pcs
67	Nut		Thread: M18		5	
-	Bulk, o-ring			92547632	1	pcs
72a	O-ring		Diameter: 329,79		5	
			Material type: EPDM			
			Thickness: 3,53			
-	Bulk, Plug vent			96620482	1	pcs
18	Plug				5	
-	Bulk, Shaft seal			92514302	1	pcs
105	Shaft seal				5	
-	Kit, coupling guard			96809946	1	pcs
7a	Pan head screw				4	
7	Coupling guard				2	
-	Kit, cover			98990970	1	pcs
18	Plug				1	
36	Nut		Thread: M12		14	
36	Nut		Thread: M10		8	
77	Cover				1	
-	Kit, motor stool			95131787	1	pcs
1a	Motor stool				1	
7	Coupling guard				2	
28	Hex head screw				8	
36	Hex nut		Thread: M16		16	
76a	Rivet				2	
77a	Pan head screw				4	
-	Kit, nut			96939130	1	pcs
11	Parallel key				1	
- 36	Nut				1	
66a	Spring lock washer				1	
66	Washer				1	
67	Nut		Thread: M18		1	
-	Kit, pump housing			95131740	1	pcs
6	Pump housing				1	
20	Pipe plug		Thread: R 3/8		2	
36	Nut		Thread: M12		14	
-	Kit, stub shaft			96537610	1	pcs
9	Socket set screw		Length (mm): 10		1	
			Thread: M8			
11	Parallel key				1	
51	Stub shaft				1	
66a	Spring lock washer				1	
66	Washer				1	
67	Nut		Thread: M18		1	
+	Spare, O-ring			97757675	1	pcs
-	Spare, plug vent			98164277	1	pcs
18	Plug				1	
-	Spare, shaft seal			98434906	1	pcs
105	Shaft seal				1	
-	Spare, spacer for shaft seal			96591277	1	pcs
105b	Spacer				1	
-	Spare, wear ring			99208819	1	pcs
45	Wear ring				1	
	Motor				1	pcs