Inventflow: Grundfos A-partner

Grundfos NBE 100-160/167 EUP ASF2ABQQE

Find the pump here:
https://inventflow.nl/en/pompenfilter/nbe/grundfos-nbe-100-160-167-eup-asf2abqqe

Contact

info@inventflow.nl
+31 (0) 546 45 80 72

Datasheet

Qty.	Description
1	**NBE 100-160/167 EUP ASF2ABQQE**

Note! Product picture may differ from actual product

Product No.: 98976197

Non-self priming, single-stage centrifugal
Flange standard: pump according to EN 1092-2.

The pump is for the pumping of thin, clean or slightly contaminated liquids without abrasive or long-fibred solids.

The impeller is hydraulically as well as dynamically balanced.

The pump has the following characteristics:
- flange dimensions according to EN 1092-2,

Pump housing: - Cast iron volute pump housing,
- stainless steel shaft

Impeller: and Cast iron impeller and bronze wear rings,
- unbalanced mechanical shaft seal according to EN 12756.

The pump is fitted with an IEC-flanged three-phase MGE motor with frequency converter and PI-controller integrated in the motor terminal box. No additional motor protection is required, as both motor and electronics are protected by integrated overload and temperature protection.

An external sensor can be connected if controlled pump operation based on for example flow, differential pressure or temperature is required.

A control panel enables setting of required setpoint as well as setting of pump to MIN or MAX operation or to STOP. The control panel has indicator lights for "Operation" and "Fault".

Communication with the pump is possible by means of Grundfos R100 Remote Control enabling further settings as well as reading out of a number of parameters such as "Actual value", "Speed", "Power input" and total "Power consumption".

The terminal box holds terminals for the connection of:
- pump start/stop (potential-free contact),
- external remote setpoint setting via analog signal, 0 - 5 V, 0 - 10 V, 0(4) - 20 mA,
- 5 V voltage supply for setpoint potentiometer, Imax = 5 mA,
- sensor, 0 - 5 V, 0 - 10 V, 0(4) - 20 mA,

Qty.	Description

- 24 V voltage supply for sensor, Imax = 40 mA,
- input for forced control to MIN or MAX (potential-free contact),
- potential-free fault signal relay with changeover contact,
- RS485 GENIbus.

Controls:

Frequency converter:	Built-in
Pressure sensor:	N

Liquid:

Pumped liquid:	Water
Liquid temperature range:	-25 .. 120 °C
Selected liquid temperature:	20 °C
Density:	998.2 kg/m³

Technical:

Pump speed on which pump data are based:	2940 rpm
Rated flow:	227.1 m³/h
Rated head:	26 m
Actual impeller diameter:	167 mm
Nominal impeller diameter:	160
Shaft seal arrangement:	Single
Code for shaft seal:	BQQE
Curve tolerance:	ISO9906:2012 3B
Bearing design:	Standard

Materials:

Pump housing:	Cast iron EN-GJL-250 ASTM class 35
Wear ring:	Brass
Impeller:	Cast iron EN-GJL-200 ASTM class 30
Shaft:	Stainless steel EN 1.4301 AISI 304
Internal pump house coating:	CED

Installation:

Maximum ambient temperature:	40 °C
Maximum operating pressure:	16 bar
Pipe connection standard:	EN 1092-2
Size of inlet connection:	DN 125
Size of outlet connection:	DN 100
Pressure rating for connection:	PN 16
Bearing lubrication:	Grease
Pump housing with feet:	Yes
Support block:	Y

Electrical data:

IE Efficiency class:	IE3
Rated power - P2:	22 kW
Mains frequency:	50 Hz
Rated voltage:	3 x 380-480 V
Rated current:	43.5-35.0 A
Cos phi - power factor:	0.91-0.90
Rated speed:	480-3540 rpm
Efficiency:	IE3 92,7%
Motor efficiency at full load:	92.7 %
Number of poles:	2
Enclosure class (IEC 34-5):	IP55
Insulation class (IEC 85):	F

Qty.	Description
	Motor No: 85901267
	Others:
	Minimum efficiency index, MEI ≥: 0.70
	Net weight: 246 kg
	Gross weight: 271 kg
	Shipping volume: 0.707 m³
	Country of origin: HU
	Custom tariff no.: 84137051

98976197 NBE 100-160/167 EUP ASF2ABQQE 50 Hz

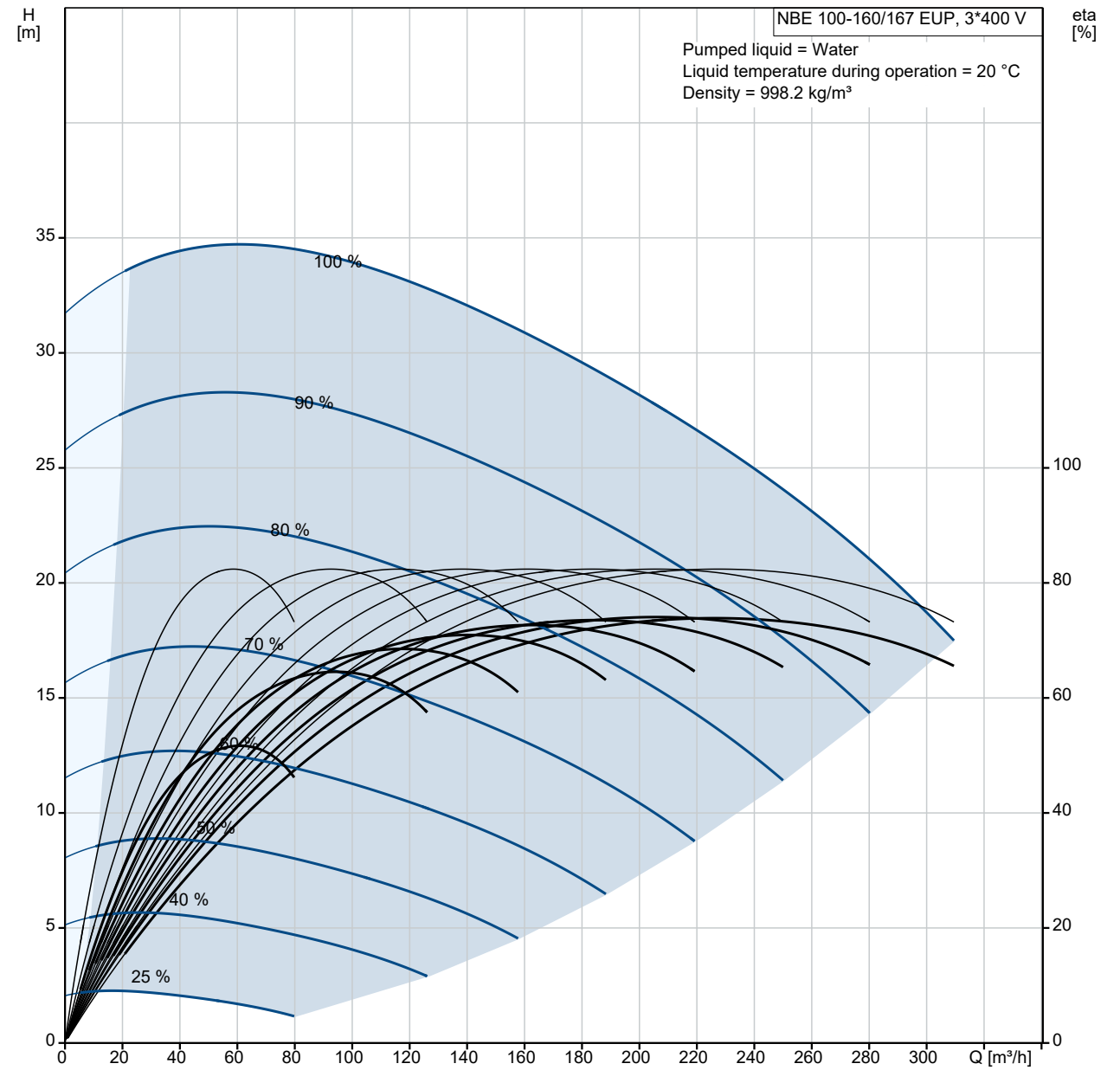

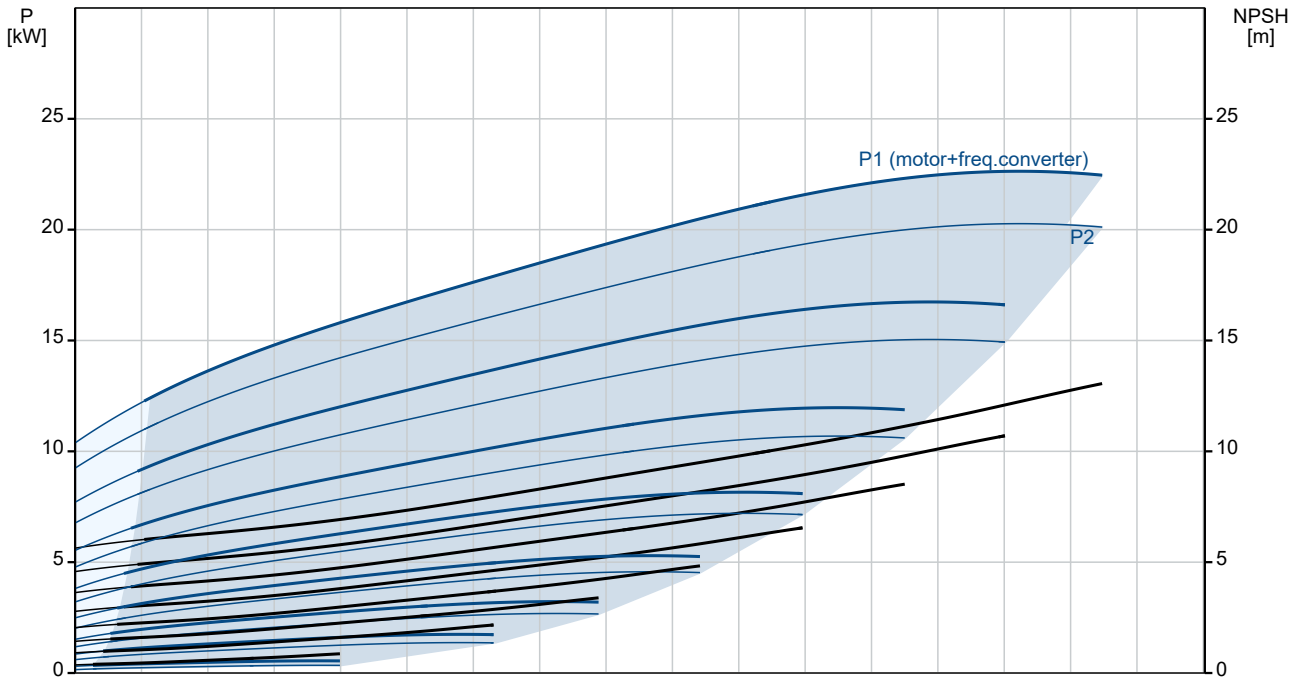

Description	Value
General information:	
Product name:	NBE 100-160/167 EUP ASF2ABQQE
Product No:	98976197
EAN number:	5712604557570
Technical:	
Pump speed on which pump data are based:	2940 rpm
Rated flow:	227.1 m³/h
Rated head:	26 m
Actual impeller diameter:	167 mm
Nominal impeller diameter:	160
Shaft seal arrangement:	Single
Shaft diameter:	24 mm
Code for shaft seal:	BQQE
Curve tolerance:	ISO9906:2012 3B
Pump version:	AS
Bearing design:	Standard
Materials:	
Pump housing:	Cast iron
Pump housing:	EN-GJL-250
Pump housing:	ASTM class 35
Wear ring:	Brass
Impeller:	Cast iron
Impeller:	EN-GJL-200
Impeller:	ASTM class 30
Shaft:	Stainless steel
Shaft:	EN 1.4301
Shaft:	AISI 304
Internal pump house coating:	CED
Material code:	A
Code for rubber:	E
Installation:	
Maximum ambient temperature:	40 °C
Maximum operating pressure:	16 bar
Pipe connection standard:	EN 1092-2
Size of inlet connection:	DN 125
Size of outlet connection:	DN 100
Pressure rating for connection:	PN 16
Bearing lubrication:	Grease
Pump housing with feet:	Yes
Support block:	Y
Connect code:	F2
Liquid:	
Pumped liquid:	Water
Liquid temperature range:	-25 .. 120 °C
Selected liquid temperature:	20 °C
Density:	998.2 kg/m³
Electrical data:	
IE Efficiency class:	IE3
Rated power - P2:	22 kW
Mains frequency:	50 Hz
Rated voltage:	3 x 380-480 V
Rated current:	43.5-35.0 A
Cos phi - power factor:	0.91-0.90
Rated speed:	480-3540 rpm
Efficiency:	IE3 92,7%
Motor efficiency at full load:	92.7 %
Number of poles:	2
Enclosure class (IEC 34-5):	IP55
Insulation class (IEC 85):	F
Motor protec:	YES
Motor No:	85901267
Mount. design. acc. IEC 34-7:	IM B35

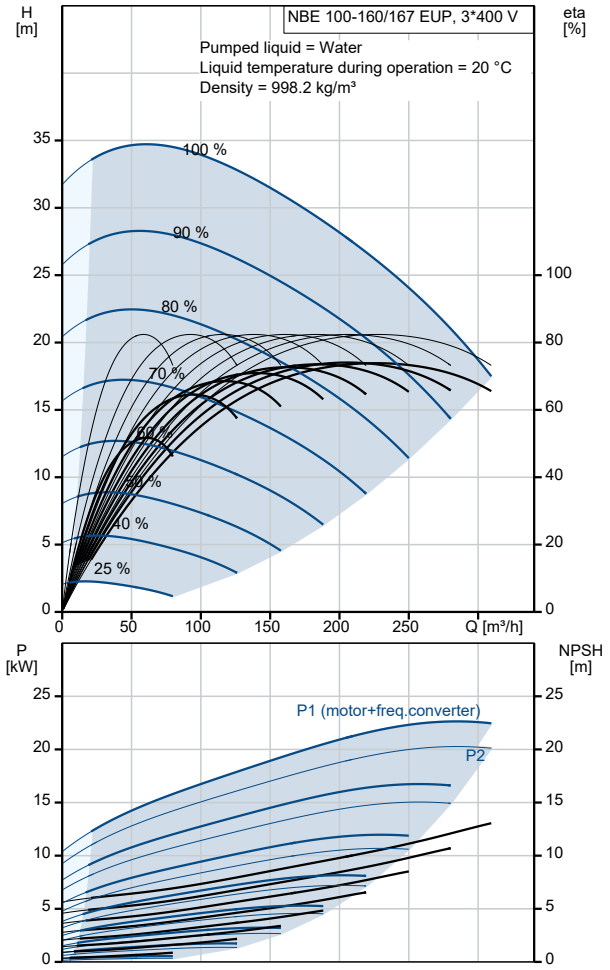

Description	Value
Controls:	
Control panel:	Standard
Function Module:	PUMP I/O
Frequency converter:	Built-in
Pressure sensor:	N
Others:	
Minimum efficiency index, MEI ≥:	0.70
Net weight:	246 kg
Gross weight:	271 kg
Shipping volume:	0.707 m^3
Country of origin:	HU
Custom tariff no.:	84137051

98976197 NBE 100-160/167 EUP ASF2ABQQE 50 Hz

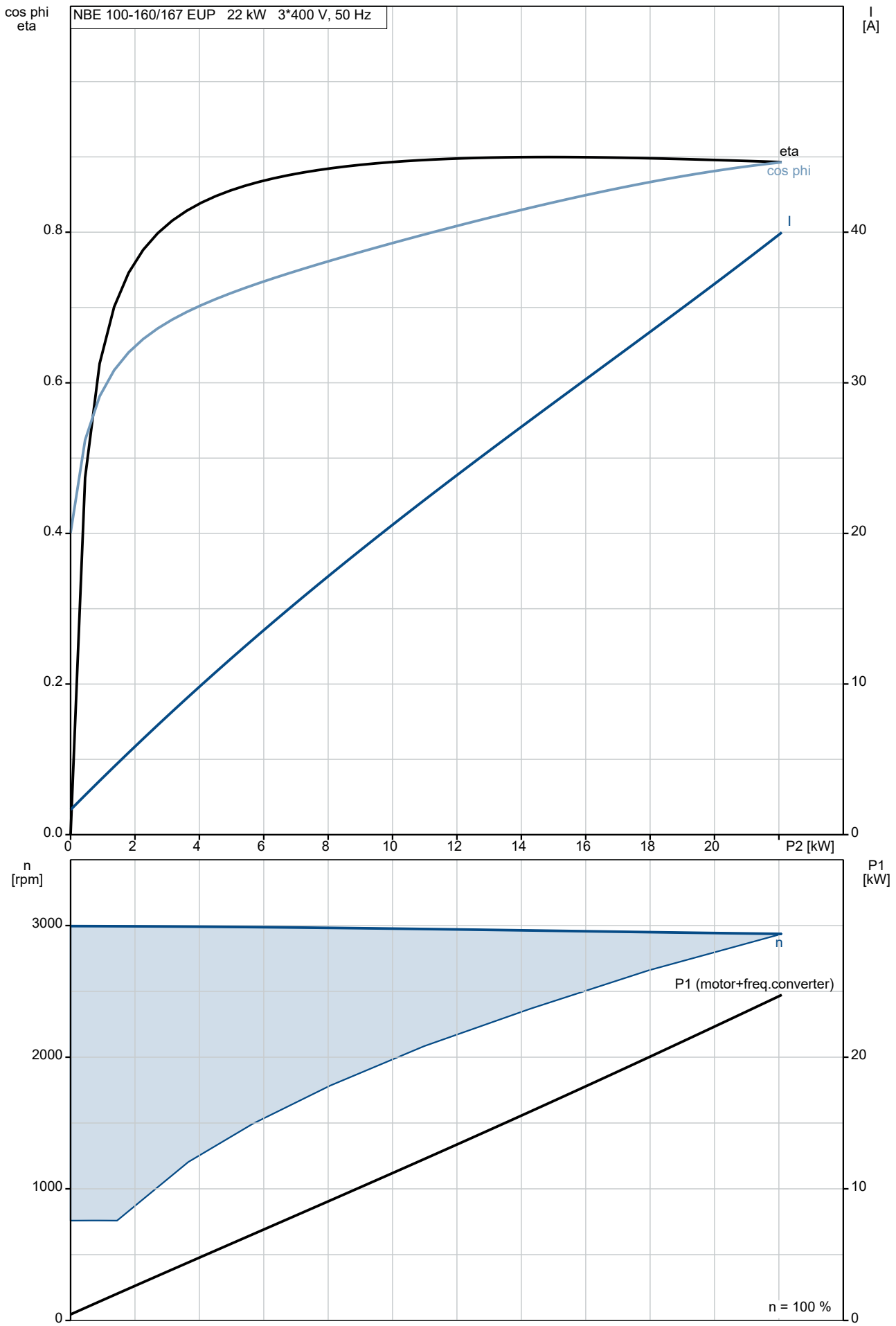

98976197 NBE 100-160/167 EUP ASF2ABQQE 50 Hz

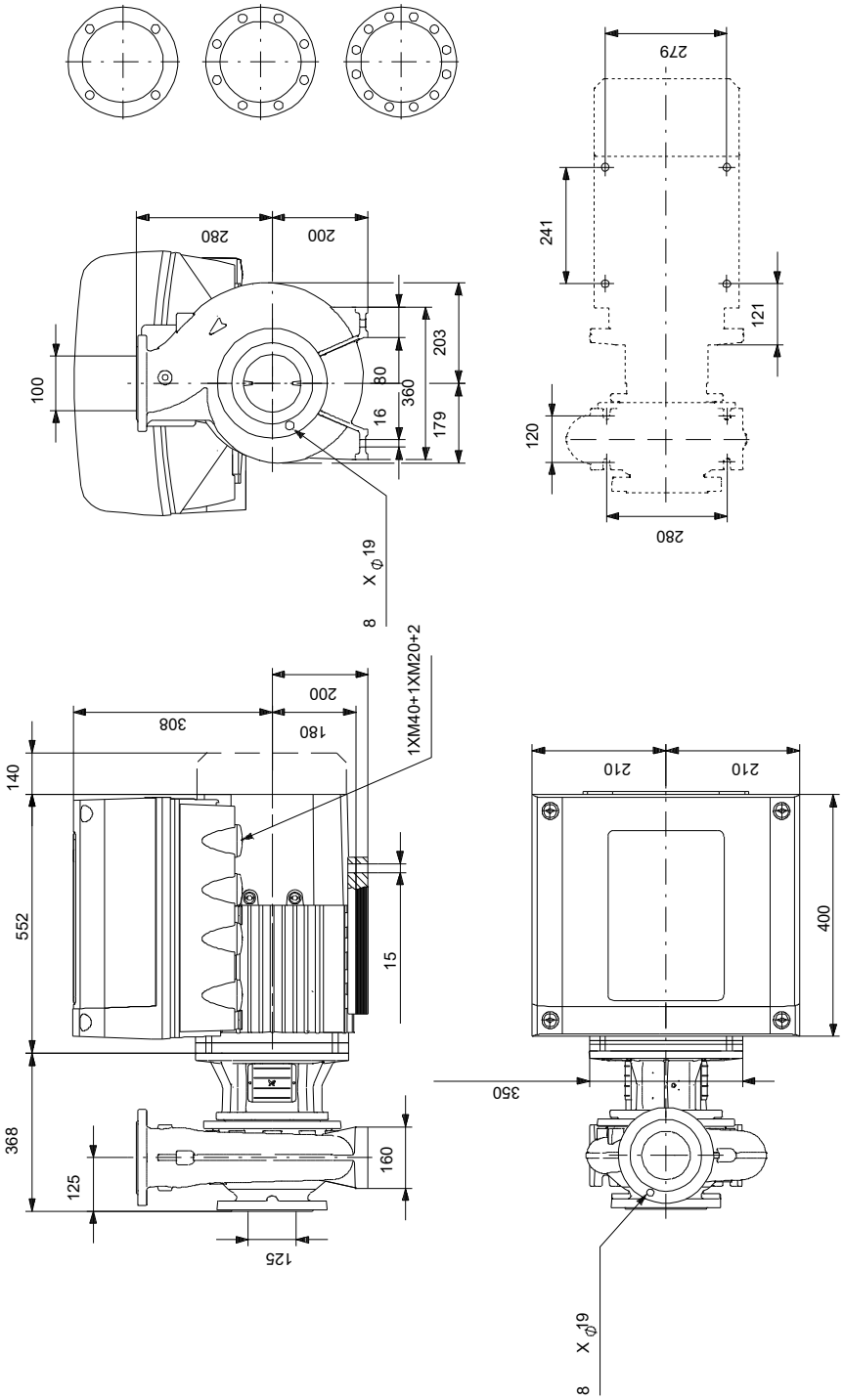

Note! All units are in [mm] unless others are stated.
Disclaimer: This simplified dimensional drawing does not show all details.

Spare parts NBE 100-160/167 EUP, Product No. 98976197
Produced After 2101 (production year and week number)

Pos	Omschrijving	Opmerking tekst	Classificatie Gegevens	Onderdeelnr.	Aanta	Eenhei
	Bulk, Nut			92514630	1	pcs
67	Nut		Thread: M14		5	
	Bulk, o-ring			92547662	1	pcs
72a	O-ring				5	
	Bulk, Plug vent			96620482	1	pcs
18	Plug				5	
	Bulk, Shaft seal			99380916	1	pcs
105	Shaft seal				5	
	Kit, coupling guard			96809946	1	pcs
7a	Pan head screw				4	
7	Coupling guard				2	
	Kit, motor stool			98990921	1	pcs
1a	Motor stool				1	
7	Coupling guard				2	
18	Plug				1	
28	Hex head screw				4	
36	Hex nut		Thread: M16		4	
36	Nut		Thread: M10		6	
76a	Rivet				2	
77a	Pan head screw				4	
	Kit, nut			96939128	1	pcs
11	Parallel key		Dimension: 6X6X35		1	
36	Nut				1	
66a	Spring lock washer					1
66	Washer					1
67	Nut		Thread: M14			1
	Kit, pump housing			98776475	1	pcs
6	Pump housing				1	
20	Plug				2	
36	Nut		Thread: M10		6	
	Kit, stub shaft			96039355	1	pcs
9	Socket set screw		Length (mm): 10		2	
			Thread: M8			
11	Parallel key		Dimension: 6X6X35		1	
51	Stub shaft				1	
66a	Spring lock washer				1	
66	Washer				1	
67	Nut		Thread: M14		1	
	Spare, O-ring			97757659	1	pcs
72a	O-ring				1	
	Spare, plug vent			98164277	1	pcs
18	Plug				1	
	Spare, shaft seal			98434904	1	pcs
105	Shaft seal				1	
	Spare, wear ring			99208748	1	pcs
45	Wear ring				1	
	Motor				1	pcs
	Kit, bearing cpl.		Designation: 6310.Z.C4-6310.Z.C4	96796811	1	
111	Ball bearing					1
154	Ball bearing					1
158	Waved washer					1
	Kit, bearing plate			96796809	1	
155.a	Cover					1
208a	Gasket					3
208	Hex socket head cap screw		Designation: DIN912			3
			Length (mm): 40			

Pos	Omschrijving	Opmerking tekst	Classificatie Gegevens	Onderdeelnr.	Aanta	Eenhei
			Thread: M5			
	Kit, connector plugs			96348923	1	
	Connector plug 5-pole					1
	Connector plug 4-pole					1
	Connector plug 4-pole					1
	Connector plug 3-pole					1
	Connector plug 3-pole					1
	Connector plug 3-pole					1
	Connector plug 3-pole					1
	Connector plug					1
273	Kit, control board			96348918	1	
	Service kit instruction					1
	Controlboard					1
	Kit, eyebolt			96796712	1	
189	Eyebolt					2
	Kit, fan cover			96830826	1	
151	Fan cover					1
152.a	Rubber bush					4
152	Hex head cap screw					4
196	Diaphragm					1
	Kit, flange			96796807	1	
156.b	Flange					1
159.b	Seal ring					1
185	Hex socket head cap screw					4
186	Drain plug					4
195.a	Grease nipple					1
	Kit, foot			96796804	1	
191.a	Foot					1
191	Foot					1
192	Hex socket head cap screw					4
194	Lock washer					4
194	Nut					4
	Kit, funct. module - E-pump			96348929	1	
263	MGE large I/O add-on					1
	Kit, funct. module -Geni/RS485			96348932	1	
263	Add-on module, cpl. w/plugs					1
	Kit, gaskets			96798508	1	
184	O-ring		Diameter: 235			2
275	Kit, inverter board			96348920	1	
	Kit, key			96796817	1	
171	Parallel key					1
	Kit, lubrication nipple			96796671	1	
195.b	Grease nipple					2
195.a	Grease nipple					1
	Kit, motor			96844389	1	
	Flex insulation					3
	EMC filter					1
	Cover cpl.					1
	Motor					1
99a	Retaining ring					1
151	Fan cover					1
152.a	Rubber bush					4
152	Hex head cap screw					4
156	Fan					1
177	Torx Screw					1
185.b	Nut					4

Pos	Omschrijving	Opmerking tekst	Classificatie Gegevens	Onderdeelnr.	Aanta	Eenhei
185. b	Nut					4
191. a	Foot					1
191	Foot					1
192	Hex socket head cap screw					4
194	Lock washer					4
196	Diaphragm					1
273a	Pan head thread forming screw					4
	Kit, ND-end shield cpl.			96796810	1	
156a	End shield NDE					1
158	Waved washer					1
159	V-ring					1
185. c	Nut					4
185. a	Hex socket head cap screw					4
195. b	Grease nipple					1
	Kit, opr. panel			96348924	1	
259	Operation panel					1
274	Kit, rectifier board			96348921	1	
	Kit, terminal box			96348914	1	
164	Cover cpl.					1
166	Pan head thread forming screw					5
251	Terminal box					1
277	Blind cover					1
283	Motor cover cpl.					1
284	Cover					1
	Kit, varistor			96348917	1	
279. b	Pan head thread forming screw					2
279	Varistor					1
49	Impeller			92538629	1	pcs