Inventflow: Grundfos A-partner

Grundfos CRE 20-2 N-A-A-E-HQQE

Find the pump here:
https://inventflow.nl/en/pompenfilter/cre/grundfos-cre-20-2-n-a-a-e-hqqe

Contact

info@inventflow.nl
+31 (0) 546 45 80 72

Datasheet

Qty.	Description
1	**CRE 20-2 N-A-A-E-HQQE**

Product No.: 99071664
Vertical, non-self-priming, multistage, in-line, centrifugal pump for installation in pipe systems and mounting on a foundation.

The pump has the following characteristics:
- Impellers and intermediate chambers are made of

Impeller: Stainless steel DIN W.-Nr. EN 1.4301.
Pump housing: - Pump head and base are made of Cast iron.
- The shaft seal has assembly length according to EN 12756.
- Power transmission is via cast iron split coupling.

Flange standard: - Pipework connection is via Oval / Rp flanges.

The pump is fitted with an IEC-flanged three-phase MGE motor with frequency converter and PI-controller integrated in the motor terminal box. No additional motor protection is required as both motor and electronics are protected by integrated overload and temperature protection.

The pump is equipped with a pressure transmitter registering pump discharge pressure and enabling controlled pump operation based on constant pressure.

A control panel enables setting of required setpoint as well as setting of pump to MIN or MAX operation or to STOP. The control panel has indicator lights for "Operation" and "Fault".

Communication with the pump is possible by means of Grundfos R100 Remote Control enabling further settings as well as reading out of a number of parameters such as "Actual value", "Speed", "Power input" and total "Power consumption".

The terminal box holds terminals for the connection of:
- Pump start/stop (potential-free contact),
- external remote setpoint setting via analog signal, 0 - 5 V, 0 - 10 V, 0(4) - 20 mA,
- 5 V voltage supply for setpoint potentiometer, Imax = 5 mA,
- pressure sensor factory-fitted.
- input for forced control to MIN or MAX (potential-free contact),
- potential-free fault signal relay with changeover contact, reporting Fault, Operation or Ready,
- RS485 GENIbus.

Controls:
Frequency converter: Built-in

Qty.	Description	
	Pressure sensor:	Y
	Liquid:	
	Pumped liquid:	Water
	Liquid temperature range:	-20 .. 120 °C
	Selected liquid temperature:	20 °C
	Density:	998.2 kg/m³
	Technical:	
	Pump speed on which pump data are based:	3520 rpm
	Rated flow:	25.3 m³/h
	Rated head:	32.5 m
	Pump orientation:	Vertical
	Shaft seal arrangement:	Single
	Code for shaft seal:	HQQE
	Approvals on nameplate:	CE,EAC,UKCA,WRAS,ACS
	Curve tolerance:	ISO9906:2012 3B
	Materials:	
	Base:	Cast iron
		EN 1561 EN-GJL-200
		ASTM A48-25B
	Impeller:	Stainless steel
		EN 1.4301
		AISI 304
	Bearing:	SIC
	Installation:	
	Maximum ambient temperature:	50 °C
	Maximum operating pressure:	10 bar
	Max pressure at stated temp:	10 bar / 120 °C
		10 bar / -20 °C
	Type of connection:	Oval / Rp
	Size of inlet connection:	2 inch
	Size of outlet connection:	2 inch
	Pressure rating for connection:	PN 10
	Flange size for motor:	FT130
	Electrical data:	
	Motor standard:	IEC
	Motor type:	112MC
	IE Efficiency class:	IE5
	Rated power - P2:	4 kW
	Power (P2) required by pump:	4 kW
	Mains frequency:	50 / 60 Hz
	Rated voltage:	3 x 380-500 V
	Rated current:	7.60-6.20 A
	Cos phi - power factor:	0.92-0.87
	Rated speed:	360-4000 rpm
	Efficiency:	92.2%
	Motor efficiency at full load:	92.2 %
	Enclosure class (IEC 34-5):	IP55
	Insulation class (IEC 85):	F
	Motor No:	98971050
	Others:	
	Minimum efficiency index, MEI ≥:	0.70
	DOE Pump Energy Index CL:	0.00
	DOE Pump Energy Index VL:	0.00
	Net weight:	60 kg
	Gross weight:	82 kg
	Shipping volume:	0.234 m³
	Country of origin:	DK
	Custom tariff no.:	84137075

99071664 CRE 20-2 N-A-A-E-HQQE

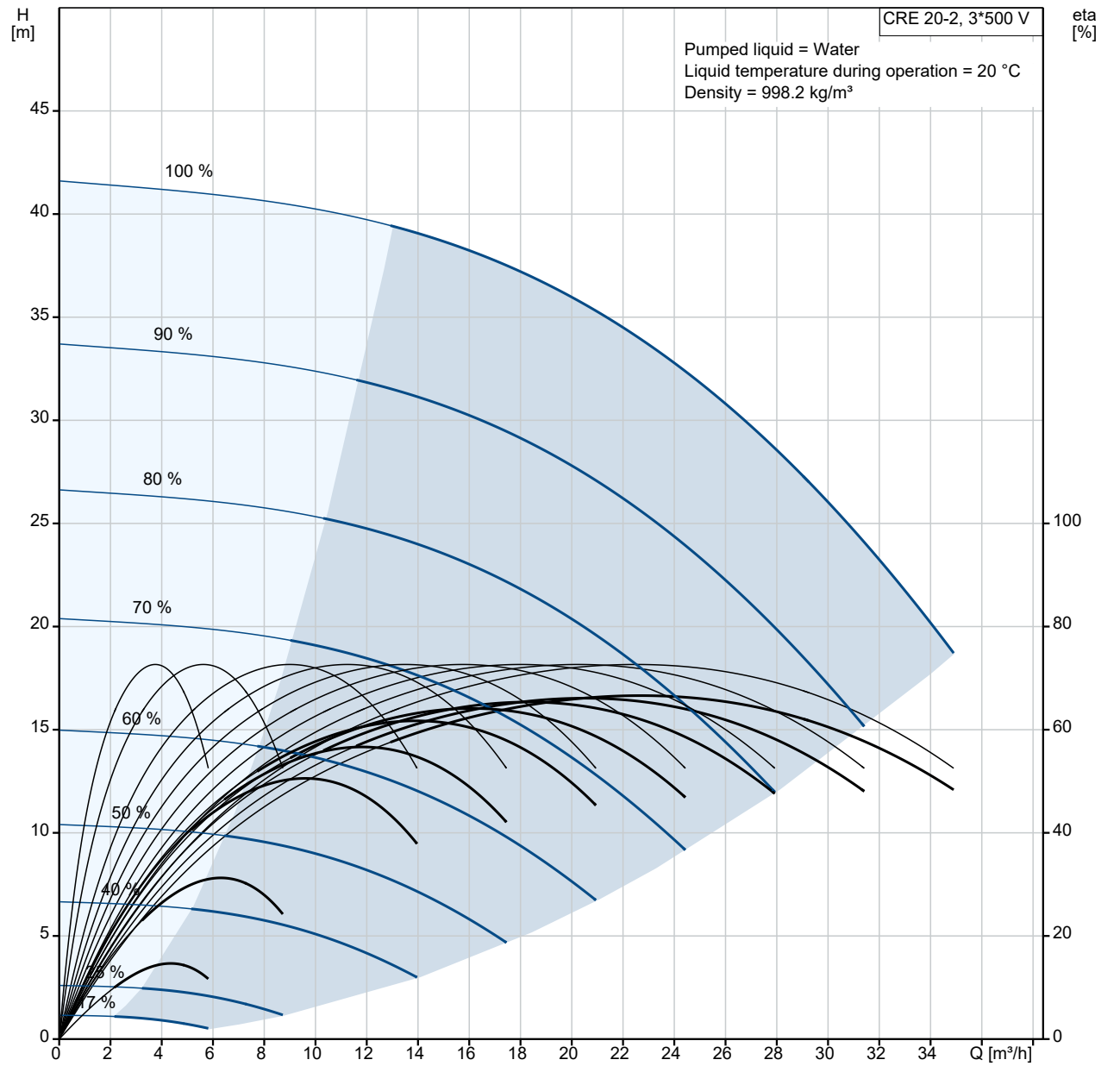

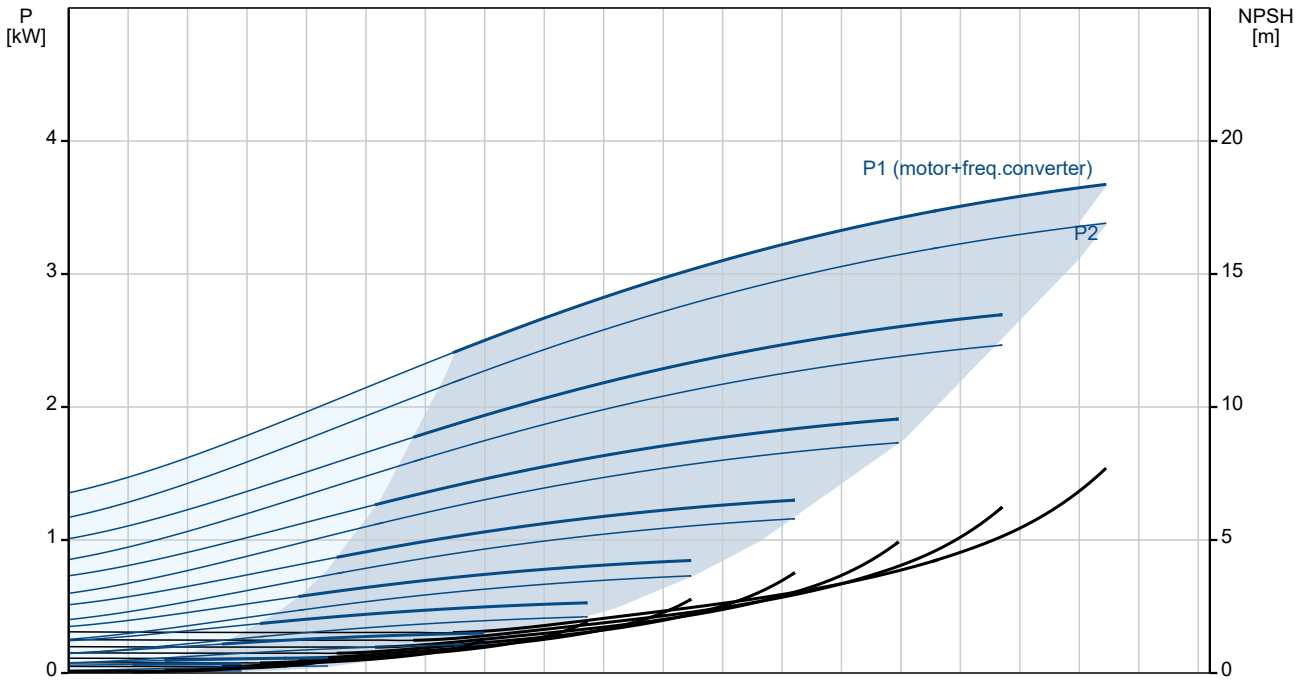

Description	Value
General information:	
Product name:	CRE 20-2 N-A-A-E-HQQE
Product No:	99071664
EAN number:	5712606195657
Technical:	
Pump speed on which pump data are based:	3520 rpm
Rated flow:	25.3 m³/h
Rated head:	32.5 m
Maximum head:	41.9 m
Stages:	2
Impellers:	2
Number of reduced-diameter impellers:	0
Low NPSH:	N
Pump orientation:	Vertical
Shaft seal arrangement:	Single
Code for shaft seal:	HQQE
Approvals on nameplate:	CE,EAC,UKCA,WRAS,ACS
Curve tolerance:	ISO9906:2012 3B
Pump version:	N
Model:	A
Materials:	
Base:	Cast iron
Base:	EN 1561 EN-GJL-200
Base:	ASTM A48-25B
Impeller:	Stainless steel
Impeller:	EN 1.4301
Impeller:	AISI 304
Material code:	A
Code for rubber:	E
Bearing:	SIC
Installation:	
Maximum ambient temperature:	50 °C
Maximum operating pressure:	10 bar
Max pressure at stated temp:	10 bar / 120 °C
Max pressure at stated temp:	10 bar / -20 °C
Type of connection:	Oval / Rp
Size of inlet connection:	2 inch
Size of outlet connection:	2 inch
Pressure rating for connection:	PN 10
Flange size for motor:	FT130
Connect code:	A
Liquid:	
Pumped liquid:	Water
Liquid temperature range:	-20 .. 120 °C
Selected liquid temperature:	20 °C
Density:	998.2 kg/m³
Electrical data:	
Motor standard:	IEC
Motor type:	112MC
IE Efficiency class:	IE5
Rated power - P2:	4 kW
Power (P2) required by pump:	4 kW
Mains frequency:	50 / 60 Hz
Rated voltage:	3 x 380-500 V
Rated current:	7.60-6.20 A
Cos phi - power factor:	0.92-0.87
Rated speed:	360-4000 rpm
Efficiency:	92.2%
Motor efficiency at full load:	92.2 %
Enclosure class (IEC 34-5):	IP55
Insulation class (IEC 85):	F
Motor protec:	ELEC

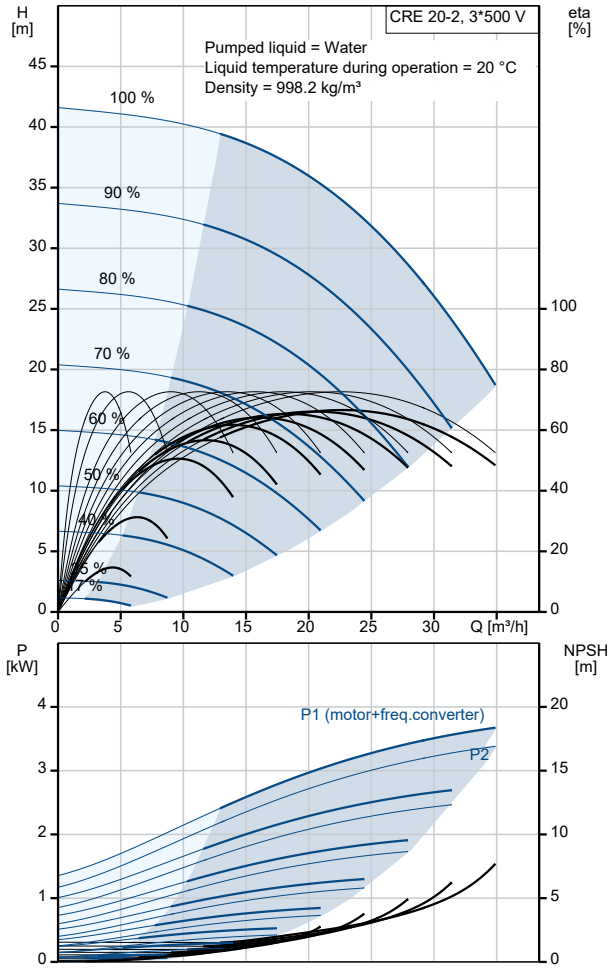

Description	Value
Motor No:	98971050
Controls:	
Control panel:	Standard
Function Module:	FM300 - Advanced
Frequency converter:	Built-in
Pressure sensor:	Y
Others:	
Minimum efficiency index, MEI ≥:	0.70
DOE Pump Energy Index CL:	0.00
DOE Pump Energy Index VL:	0.00
Net weight:	60 kg
Gross weight:	82 kg
Shipping volume:	0.234 m^3
Config. file no:	99059150
Country of origin:	DK
Custom tariff no.:	84137075

99071664 CRE 20-2 N-A-A-E-HQQE

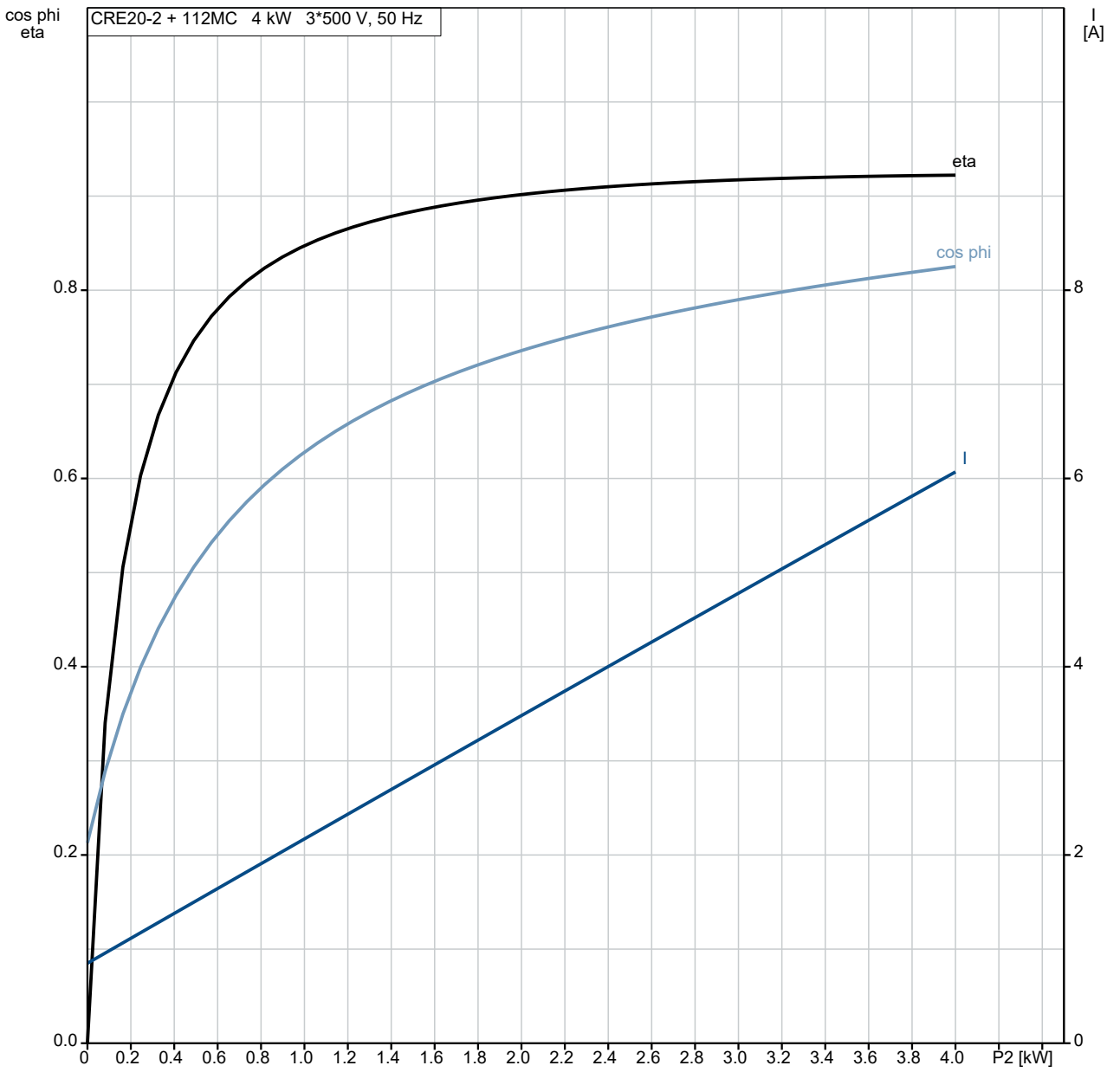

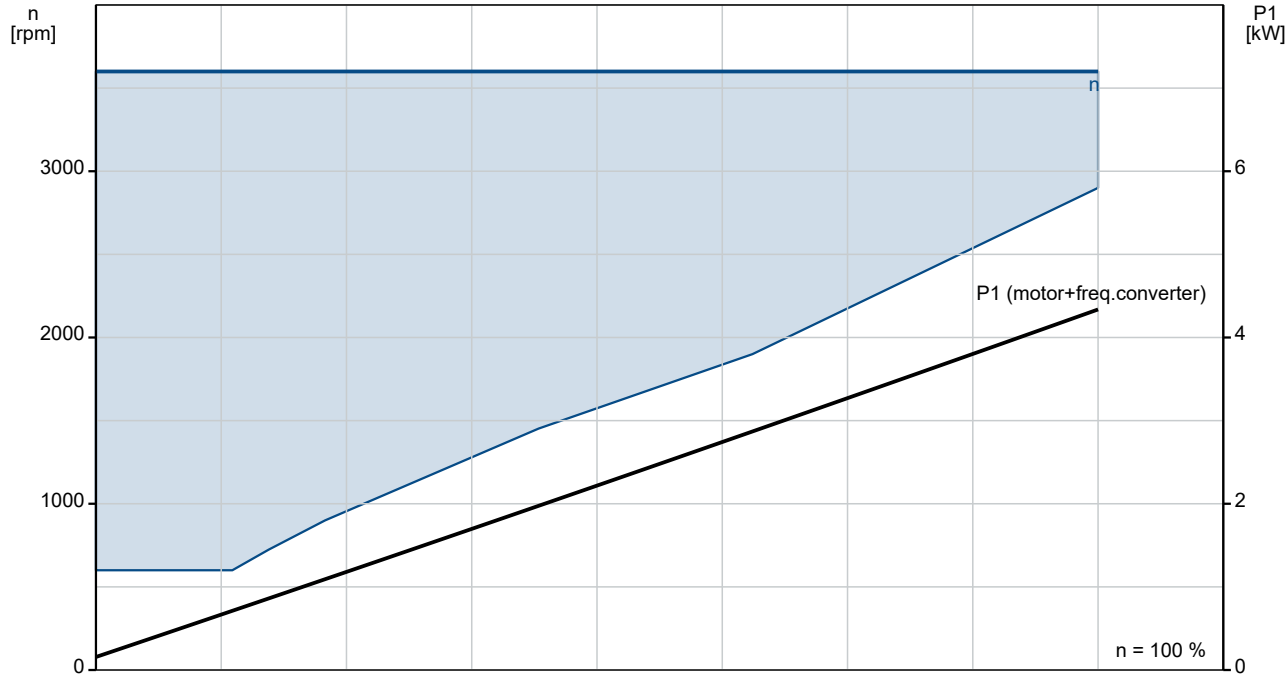

99071664 CRE 20-2 N-A-A-E-HQQE

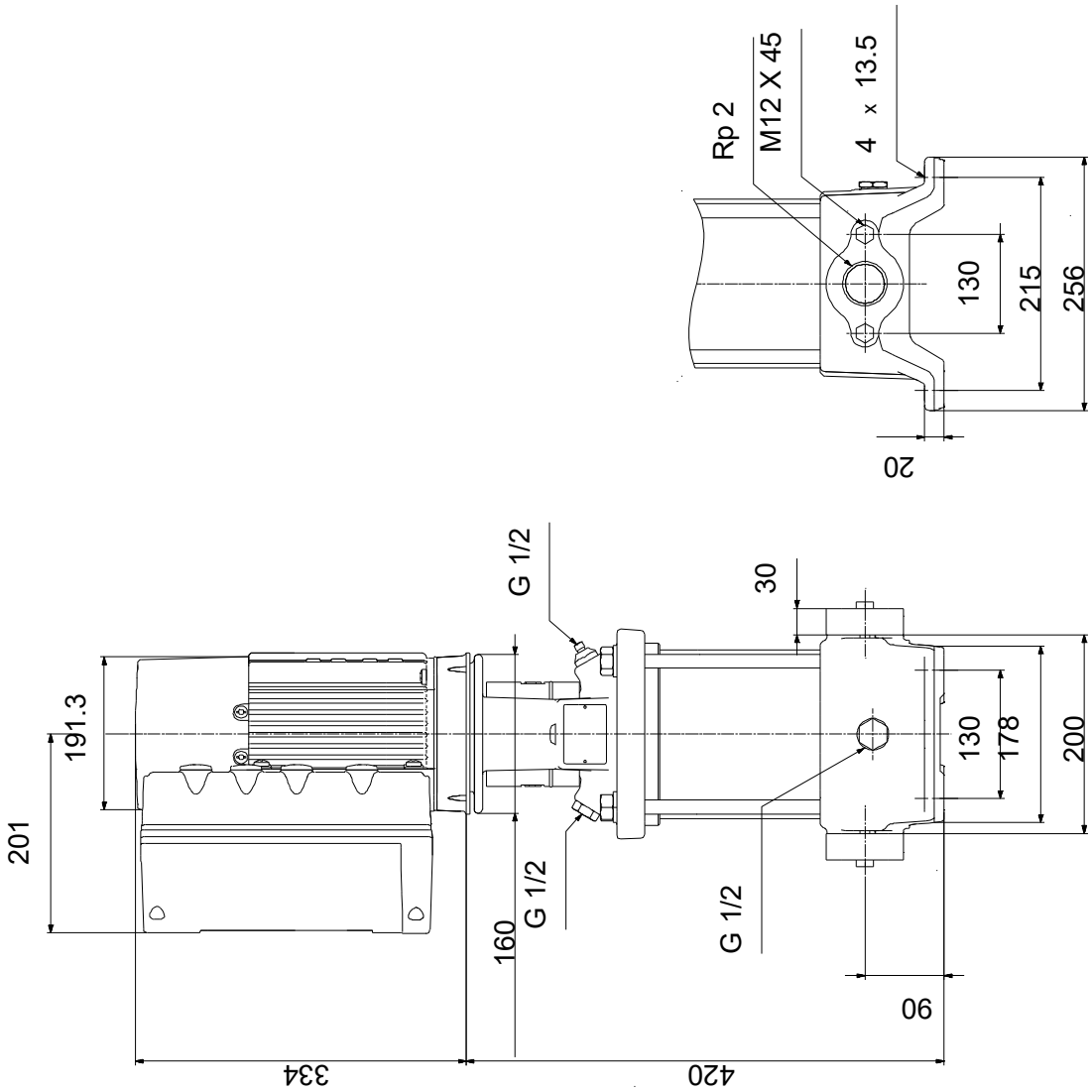

Note! All units are in [mm] unless others are stated.
Disclaimer: This simplified dimensional drawing does not show all details.

Spare parts CRE 20-2, Product No. 99071664
Produced After 1633 (production year and week number)

	Pos	Omschrijving	Opmerking tekst	Classificatie Gegevens	Onderdeelnr.	Aantal	Eenheid
-		Kit, chamber stack			96508542	1	pcs
-	80	Chamber stack				1	
-	3	Top intermediate chamber					1
		Intermediate chamber					
		Front plate					
		Guide vane					
-	4a	Intermediate chamber cpl.					1
		Bearing plate					
	3	Intermediate chamber					
	45	Neck ring cpl.					
	47	Bearing bush					
	65	Retainer for upper seal ring					
	26a	Strap cpl.					2
	26.c	Washer		Designation: DIN 125A			2
				Thickness: 1,6			
	26.b	Hex head screw					2
-	44a	Inlet part cpl.					1
		Sand Lifter					
		Guide cup					
		Inlet part					
	45	Neck ring cpl.					
	65	Retainer for upper seal ring					
	47a	Bearing ring					1
-	49	Impeller cpl.					2
		Impeller blade					
		Impeller plate					
		Impeller plate					
	49c	Wear ring					
-	51	Shaft, spline, cpl.					1
		Bar					
	62	Stop ring					
	64d	Spacing bush					1
	64c	Spacer					1
	64b	Spacing bush		Length (mm): 5.00			1
	64a	Spacing pipe		Internal diameter: 17,5			1
				Length (mm): 17			
	66	Wedge lock washer					1
	67	Lock nut		Thread: M8			1
	69	Spacing bush					1
-		Kit, coupling			96511350	1	pcs
		Adjusting fork				1	
	9	Hex socket head cap screw		Designation: DIN 912		4	
				Length (mm): 25			
				Thread: M8			
	10a	Coupling half				2	
	10	Shaft pin		Diameter: 5		1	
				Length (mm): 26			
-		Kit, coupling guard			96509612	1	pcs
	7.a	Combi Slot Torx screw				4	
	7	Coupling guard				2	
-		Kit, gaskets			96509609	1	pcs
		Gasket				2	
	24	O-ring				2	
	37	O-ring				2	
	38	O-ring				1	
	38	O-ring				1	
	38	O-ring				2	
	60	Spring				4	

Pos	Omschrijving	Opmerking tekst	Classificatie Gegevens	Onderdeelnr.	Aantal	Eenheid
415	Gasket		Internal diameter: 44		2	
			Outer diameter: 60			
			Thickness: 2			
441b	Gasket		Internal diameter: 49		2	
			Outer diameter: 92			
			Thickness: 2			
-	Kit, plug			96511311	1	pcs
- 18	Air vent screw				1	
	Spindle					1
	Plug					1
25a	Drain plug				1	
25	Plug				1	
38	O-ring				1	
38	O-ring				1	
38	O-ring				2	
38	O-ring		Diameter: 5,3		1	
			Material type: FKM			
			Thickness: 2,4			
38	O-ring		Diameter: 16,3		1	
			Material type: FKM			
			Thickness: 2,4			
38	O-ring		Diameter: 16,3		2	
			Material type: FKM			
			Thickness: 2,4			
-	Kit, shaft seal HQQE			96511844	1	pcs
105	Shaft seal		Material type: HQQE		1	
-	Kit, wear parts			96511824	1	pcs
- 4a	Intermediate chamber cpl.				1	
	Sand Lifter					1
	Guide cup					1
	Bearing plate					1
	Guide vane					10
3	Intermediate chamber					1
45	Neck ring cpl.					1
47	Bearing bush					1
65	Retainer					1
26.c	Washer		Designation: DIN 125A		2	
			Thickness: 1,6			
26.b	Hex head screw				2	
45	Neck ring cpl.				5	
47a	Bearing ring				1	
49c	Wear ring				6	
62	Retaining ring				1	
64d	Spacing bush				1	
64c	Spacer				1	
64b	Spacing bush		Length (mm): 5.00		1	
64a	Spacing pipe		Internal diameter: 17,5		1	
			Length (mm): 17			
65	Retainer				5	
66	Wedge lock washer				1	
67	Lock nut		Thread: M8		1	
-	Base cpl.			99077820	1	pcs
6	Base			99535016	1	
25a	Drain plug			96535881	1	
35	Hex head screw			96620478	4	
441a	Flange			99315185	2	
-	Motor				1	pcs
-	Kit, Blanking plug			99052475	1	
252b	Plug cpl.					4
252b	Blanking plug					1

Pos	Omschrijving	Opmerking tekst	Classificatie Gegevens	Onderdeelnr.	Aantal	Eenheid
-	Kit, cable gland			98736096	1	
293	Cable glands set					1
-	Kit, connector plugs			98403113	1	
266	Connector plug 10-pole					1
266	Connector plug 2-pole					1
266	Connector plug 8-pole					1
266	Connector plug 8-pole					1
266	Connector plug 8-pole					1
266	Connector plug 3-pole					1
266	Connector plug 3-pole					1
266	Connector plug 3-pole					1
-	Kit, control box			98878612	1	
251d	Pan head thread forming screw					4
251b	Control box					1
251a	Control box cpl.					1
252b	Plug cpl.					4
252b	Blanking plug					1
266	Connector plug 10-pole					1
266	Connector plug 8-pole					1
266	Connector plug 8-pole					1
266	Connector plug 8-pole					1
266	Connector plug 3-pole					1
266	Connector plug 3-pole					1
266	Connector plug 3-pole					1
268a	Base					1
268	Pan head screw					1
273b	Battery					1
273a	Cross recess Pan head screw					3
273	Funct. Module cpl.					1
275a	Pin					1
277b	Spring					4
277a	Cross recess Pan head screw					1
277	Cover					1
286	Spacer					1
287	Cover					1
288b	Retaining ring					8
288a	Pan head thread forming screw					8
288	Wire clamp					4
289a	Pan head thread forming screw					1
289	Wire clamp					1
290	Control panel, cpl.					1
301	Jumper					1
-	Kit, Control box upper			98869865	1	
251d	Pan head thread forming screw					4
251b	Control box					1
-	Kit, Control panel			98939973	1	
290	Control panel, cpl.					1
-	Kit, cover			98330622	1	
287	Cover					1
-	Kit, end shield (NDE)			98869883	1	

Pos	Omschrijving	Opmerking tekst	Classificatie Gegevens	Onderdeelnr.	Aantal	Eenheid
156c	Seal ring					1
156a	End shield NDE					1
157	O-ring		Diameter: 62 Material type: NBR Thickness: 3			1
158	Waved washer					1
206	Pan head thread forming screw					4
-	Kit, fan			98869877	1	
152	Pan head thread forming screw					4
156c	Seal ring					1
156	Fan					1
-	Kit, fan cover			99957566	1	
151	Fan cover					1
152	Pan head thread forming screw					4
-	Kit, flange (DE)			98966301	1	
	Glue					0
156c	Seal ring					1
156b	Flange					1
201c	Drain plug					3
-	Kit, Funct. module			98334777	1	
273a	Cross recess Pan head screw					5
273	Funct. Module cpl.					1
275a	Pin					1
286	Spacer					1
-	Kit, Isolation cover			98859508	1	
277b	Spring					4
277a	Cross recess Pan head screw					1
277	Cover					1
-	Kit, Lower part cpl.			98859571	1	
178	Pan head thread forming screw					4
251a	Control box cpl.					1
275a	Pin					1
277a	Cross recess Pan head screw					1
277	Cover					1
-	Kit, motor			99010750	1	
	Glue					0
	Terminal					3
111	Ball bearing		Designation: 6206.2Z.C3.SYN			1
150	Stator w/housing					1
151	Fan cover					1
152	Pan head thread forming screw					4
153	Angular-contact bearing					1
156d	Gasket					1
156c	Seal ring					1
156c	Seal ring					1
156b	Flange					1
156a	End shield NDE					1
156	Fan					1

Pos	Omschrijving	Opmerking tekst	Classificatie Gegevens	Onderdeelnr.	Aantal	Eenheid
157	O-ring		Diameter: 62		1	
			Material type: NBR			
			Thickness: 3			
158	Waved washer				2	
172	Shaft w/rotor				1	
181	Pan head staybolt				4	
186	Drain plug				3	
190	Eyebolt				2	
201b	Blind plug				1	
203	Terminal plug				1	
289a	Pan head thread forming screw				2	
-	Kit, plug			99028676	1	
152	Pan head thread forming screw				2	
203	Terminal plug				1	
205	Gasket				1	
-	Kit, screws			99028712	1	
268a	Base				1	
268	Pan head screw				1	
288b	Retaining ring				8	
288a	Pan head thread forming screw				8	
288	Wire clamp				4	
289a	Pan head thread forming screw				1	
289	Wire clamp				1	
-	Kit, staybolts			98881543	1	
181	Pan head staybolt				4	
111	Ball bearing		Designation: 6206.2Z.C3.SYN	99078033	1	
111	Ball bearing		Designation: 6206.2Z.C3.SYN	97501070	1	
152	Pan head thread forming screw			99834207	4	
152	Pan head thread forming screw			99814578	4	
153	Angular-contact bearing			99078040	1	
153	Angular-contact bearing			96550559	1	
186	Drain plug			99980519	3	
251d	Pan head thread forming screw			98995460	4	
266	Connector plug 3-pole			99421265	1	
2a	Pump head			98785091	1	pcs
+ 3	Top intermediate chamber			96538971	1	pcs
+ 3	Top intermediate chamber			98371105	1	pcs
- 4a	Intermediate chamber cpl.			96538842	1	pcs
3	Intermediate chamber			96535086	1	
65	Retainer for upper seal ring			97699527	1	
65	Retainer for upper seal ring			96587913	1	
+ 4a	Intermediate chamber cpl.			98371109	1	pcs
7.a	Combi Slot Torx screw			96886324	4	pcs
10	Shaft pin		Diameter: 5	96536473	1	pcs
			Length (mm): 26			
10	Shaft pin		Diameter: 5	96587588	1	pcs
			Length (mm): 26			
+ 18	Air vent screw			96547461	1	pcs
+ 18	Air vent screw			95061351	1	pcs
25	Plug			96536013	1	pcs
26a	Strap cpl.			98964727	2	pcs
26.c	Washer		Designation: DIN 125A	99262704	2	pcs
			Thickness: 1,6			
26.c	Washer		Designation: DIN 125A	99886930	2	pcs
			Thickness: 1,6			
26	Staybolt		Length (mm): 163	98680984	4	pcs
			Thread: M16			

	Pos	Omschrijving	Opmerking tekst	Classificatie Gegevens	Onderdeelnr.	Aantal	Eenheid
	26	Staybolt		Length (mm): 163	98680982	4	pcs
				Thread: M16			
	28	Hex head screw		Length (mm): 25	99335941	4	pcs
				Thread: M8			
	32	Washer		Designation: DIN 125 A	98923051	4	pcs
				Internal diameter: 17			
				Outer diameter: 30			
				Thickness: 3			
	36	Hex nut		Thread: M16	96620480	4	pcs
	37	O-ring			96538857	2	pcs
	38	O-ring			99198791	1	pcs
	38	O-ring			99198815	3	pcs
	38	O-ring			99412727	3	pcs
+	44a	Inlet part cpl.			98818924	1	pcs
	47a	Bearing ring			96538795	1	pcs
-	49	Impeller cpl.			96538799	2	pcs
	49c	Wear ring			96547340	1	
+	49	Impeller cpl.			98394458	2	pcs
+	51	Shaft, spline, cpl.			98368605	1	pcs
	55	Outer sleeve			98812619	1	pcs
	60	Spring			96538963	4	pcs
	64d	Spacing bush			96538947	1	pcs
	64c	Spacer			97980241	1	pcs
	64b	Spacing bush		Length (mm): 5.00	96535098	1	pcs
	64a	Spacing pipe		Internal diameter: 17,5	98417487	1	pcs
				Length (mm): 17			
	66	Wedge lock washer			96536157	1	pcs
	66	Wedge lock washer			92575609	1	pcs
	67	Lock nut		Thread: M8	98277008	1	pcs
	69	Spacing bush			96538949	1	pcs
	76a	Rivet			96620489	2	pcs
	105	Shaft seal		Material type: HQQE	96538914	1	pcs