Inventflow: Grundfos A-partner

Grundfos CRE 10-17 N-FJ-A-E-HQQE

Find the pump here:
https://inventflow.nl/en/pompenfilter/cre/grundfos-cre-10-17-n-fj-a-e-hqqe

Contact

info@inventflow.nl
+31 (0) 546 45 80 72

Datasheet

Qty.	Description
1	**CRE 10-17 N-FJ-A-E-HQQE**

Product No.: 99071791
Vertical, non-self-priming, multistage, in-line, centrifugal pump for installation in pipe systems and mounting on a foundation.

The pump has the following characteristics:
- Impellers and intermediate chambers are made of

Impeller: Stainless steel DIN W.-Nr. EN 1.4301.
Pump housing: - Pump head and base are made of Cast iron.
- The shaft seal has assembly length according to EN 12756.
- Power transmission is via cast iron split coupling.

Flange standard: - Pipework connection is via DIN / JIS flanges.

The pump is fitted with an IEC-flanged three-phase MGE motor with frequency converter and PI-controller integrated in the motor terminal box. No additional motor protection is required as both motor and electronics are protected by integrated overload and temperature protection.

The pump is equipped with a pressure transmitter registering pump discharge pressure and enabling controlled pump operation based on constant pressure.

A control panel enables setting of required setpoint as well as setting of pump to MIN or MAX operation or to STOP. The control panel has indicator lights for "Operation" and "Fault".

Communication with the pump is possible by means of Grundfos R100 Remote Control enabling further settings as well as reading out of a number of parameters such as "Actual value", "Speed", "Power input" and total "Power consumption".

The terminal box holds terminals for the connection of:
- Pump start/stop (potential-free contact),
- external remote setpoint setting via analog signal, 0 - 5 V, 0 - 10 V, 0(4) - 20 mA,
- 5 V voltage supply for setpoint potentiometer, Imax = 5 mA,
- pressure sensor factory-fitted.
- input for forced control to MIN or MAX (potential-free contact),
- potential-free fault signal relay with changeover contact, reporting Fault, Operation or Ready,
- RS485 GENIbus.

Controls:
Frequency converter: Built-in

Qty.	Description	
	Pressure sensor:	Y
	Liquid:	
	Pumped liquid:	Water
	Liquid temperature range:	-20 .. 120 °C
	Selected liquid temperature:	20 °C
	Density:	998.2 kg/m³
	Technical:	
	Pump speed on which pump data are based:	3529 rpm
	Rated flow:	12.1 m³/h
	Rated head:	204.2 m
	Pump orientation:	Vertical
	Shaft seal arrangement:	Single
	Code for shaft seal:	HQQE
	Approvals on nameplate:	CE,EAC,UKCA,WRAS,ACS
	Curve tolerance:	ISO9906:2012 3B
	Materials:	
	Base:	Cast iron
		EN 1561 EN-GJL-200
		ASTM A48-25B
	Impeller:	Stainless steel
		EN 1.4301
		AISI 304
	Bearing:	SIC
	Installation:	
	Maximum ambient temperature:	50 °C
	Maximum operating pressure:	25 bar
	Max pressure at stated temp:	25 bar / 120 °C
		25 bar / -20 °C
	Type of connection:	DIN / JIS
	Size of inlet connection:	DN 40
	Size of outlet connection:	DN 40
	Pressure rating for connection:	PN 25
	Flange rating inlet:	300 lb
	Flange size for motor:	FF300
	Electrical data:	
	Motor standard:	IEC
	Motor type:	160MH
	IE Efficiency class:	IE5
	Rated power - P2:	11 kW
	Power (P2) required by pump:	11 kW
	Mains frequency:	50 / 60 Hz
	Rated voltage:	3 x 380-500 V
	Rated current:	20.3-16.0 A
	Cos phi - power factor:	0.93-0.90
	Rated speed:	360-4000 rpm
	Efficiency:	93.1%
	Motor efficiency at full load:	93.1 %
	Enclosure class (IEC 34-5):	IP55
	Insulation class (IEC 85):	F
	Motor No:	98971053
	Others:	
	Minimum efficiency index, MEI ≥:	0.70
	DOE Pump Energy Index CL:	0.00
	DOE Pump Energy Index VL:	0.00
	Net weight:	127 kg
	Gross weight:	158 kg
	Shipping volume:	0.619 m³
	Danish VVS No.:	386003117
	Country of origin:	DK

Qty.	Description
	Custom tariff no.: 84137075

99071791 CRE 10-17 N-FJ-A-E-HQQE

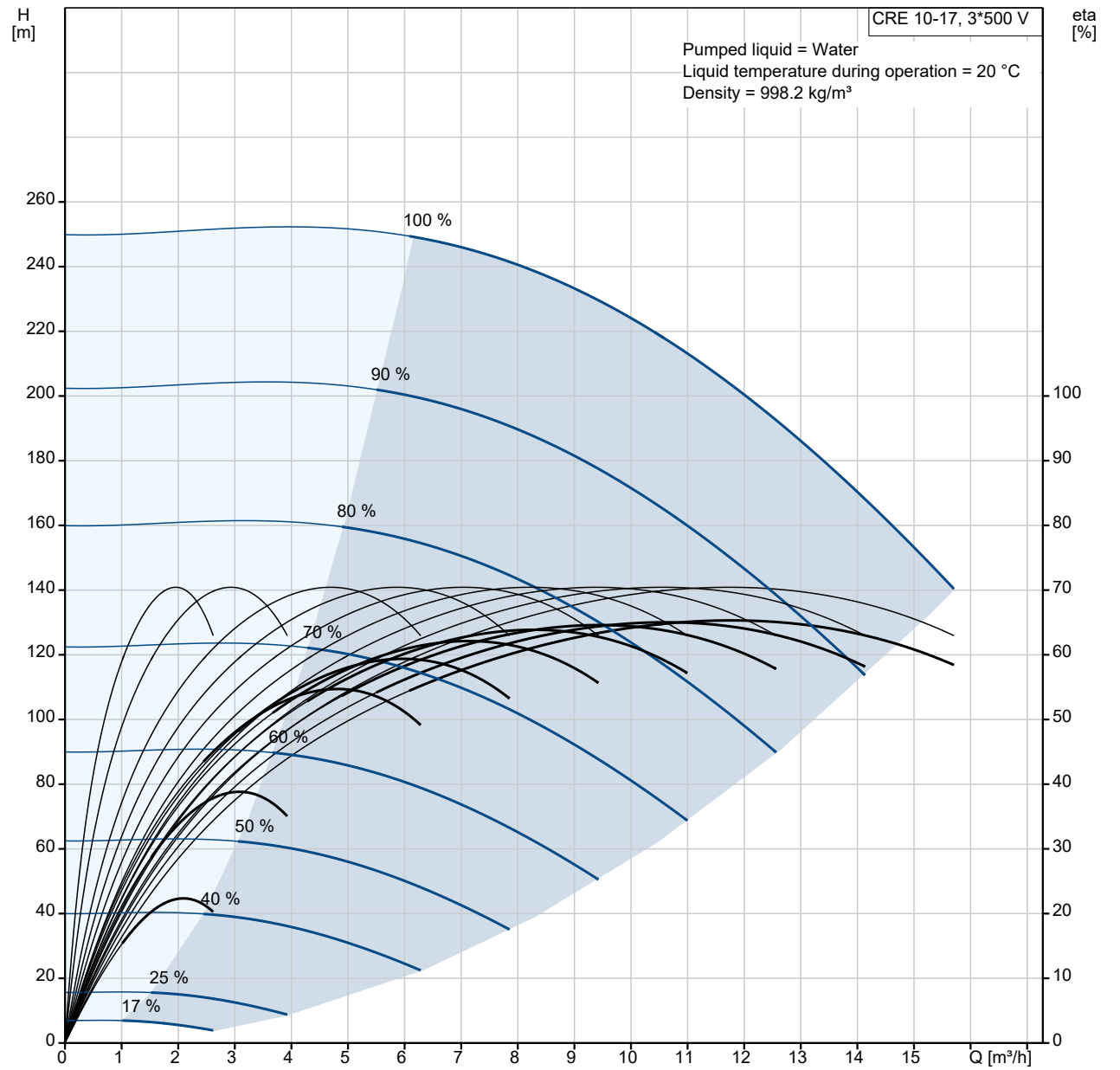

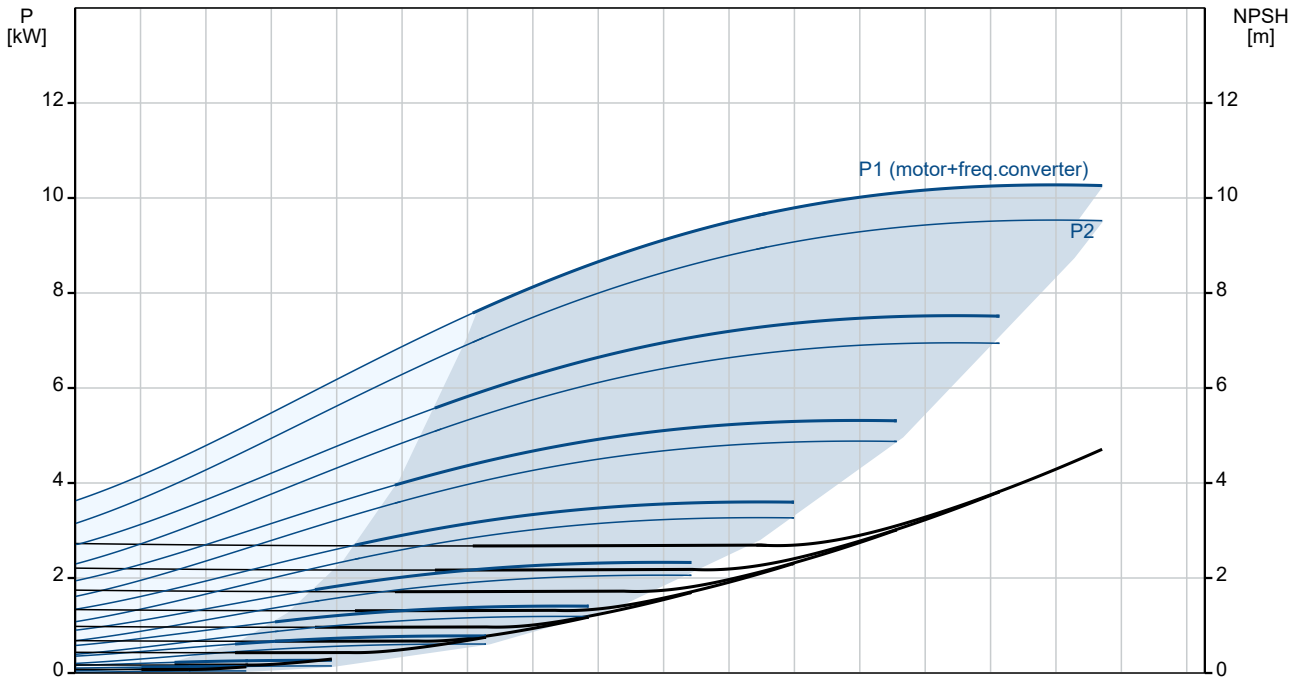

Description	Value
General information:	
Product name:	CRE 10-17 N-FJ-A-E-HQQE
Product No:	99071791
EAN number:	5712606197989
Technical:	
Pump speed on which pump data are based:	3529 rpm
Rated flow:	12.1 m³/h
Rated head:	204.2 m
Maximum head:	252 m
Stages:	18
Impellers:	17
Number of reduced-diameter impellers:	0
Low NPSH:	N
Pump orientation:	Vertical
Shaft seal arrangement:	Single
Code for shaft seal:	HQQE
Approvals on nameplate:	CE,EAC,UKCA,WRAS,ACS
Curve tolerance:	ISO9906:2012 3B
Pump version:	N
Model:	A
Materials:	
Base:	Cast iron
Base:	EN 1561 EN-GJL-200
Base:	ASTM A48-25B
Impeller:	Stainless steel
Impeller:	EN 1.4301
Impeller:	AISI 304
Material code:	A
Code for rubber:	E
Bearing:	SIC
Installation:	
Maximum ambient temperature:	50 °C
Maximum operating pressure:	25 bar
Max pressure at stated temp:	25 bar / 120 °C
Max pressure at stated temp:	25 bar / -20 °C
Type of connection:	DIN / JIS
Size of inlet connection:	DN 40
Size of outlet connection:	DN 40
Pressure rating for connection:	PN 25
Flange rating inlet:	300 lb
Flange size for motor:	FF300
Connect code:	FJ
Liquid:	
Pumped liquid:	Water
Liquid temperature range:	-20 .. 120 °C
Selected liquid temperature:	20 °C
Density:	998.2 kg/m³
Electrical data:	
Motor standard:	IEC
Motor type:	160MH
IE Efficiency class:	IE5
Rated power - P2:	11 kW
Power (P2) required by pump:	11 kW
Mains frequency:	50 / 60 Hz
Rated voltage:	3 x 380-500 V
Rated current:	20.3-16.0 A
Cos phi - power factor:	0.93-0.90
Rated speed:	360-4000 rpm
Efficiency:	93.1%
Motor efficiency at full load:	93.1 %
Enclosure class (IEC 34-5):	IP55
Insulation class (IEC 85):	F

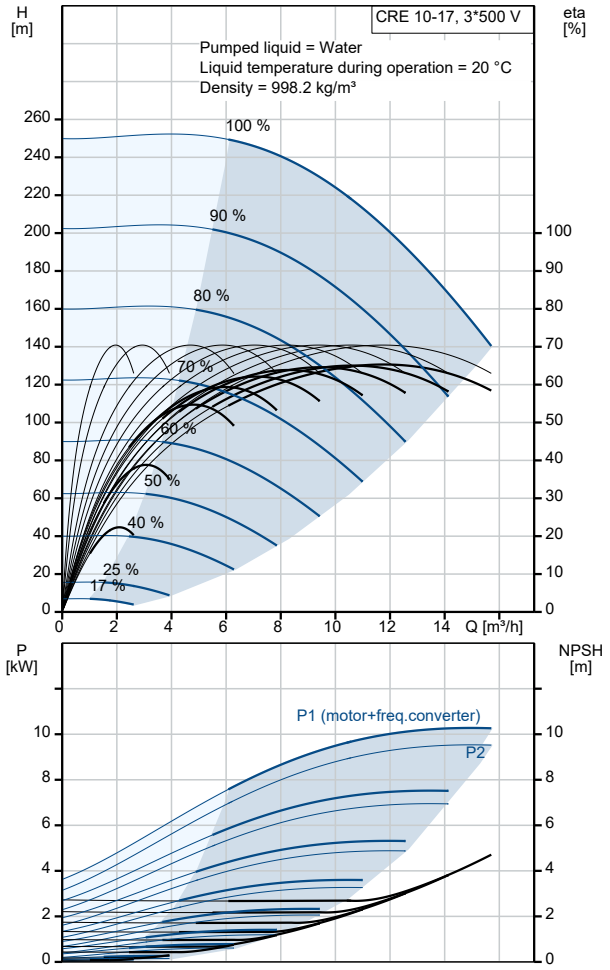

Description	Value
Motor protec:	ELEC
Motor No:	98971053
Controls:	
Control panel:	Standard
Function Module:	300
Frequency converter:	Built-in
Pressure sensor:	Y
Others:	
Minimum efficiency index, MEI ≥:	0.70
DOE Pump Energy Index CL:	0.00
DOE Pump Energy Index VL:	0.00
Net weight:	127 kg
Gross weight:	158 kg
Shipping volume:	0.619 m^3
Config. file no:	99059021
Danish VVS No.:	386003117
Country of origin:	DK
Custom tariff no.:	84137075

99071791 CRE 10-17 N-FJ-A-E-HQQE

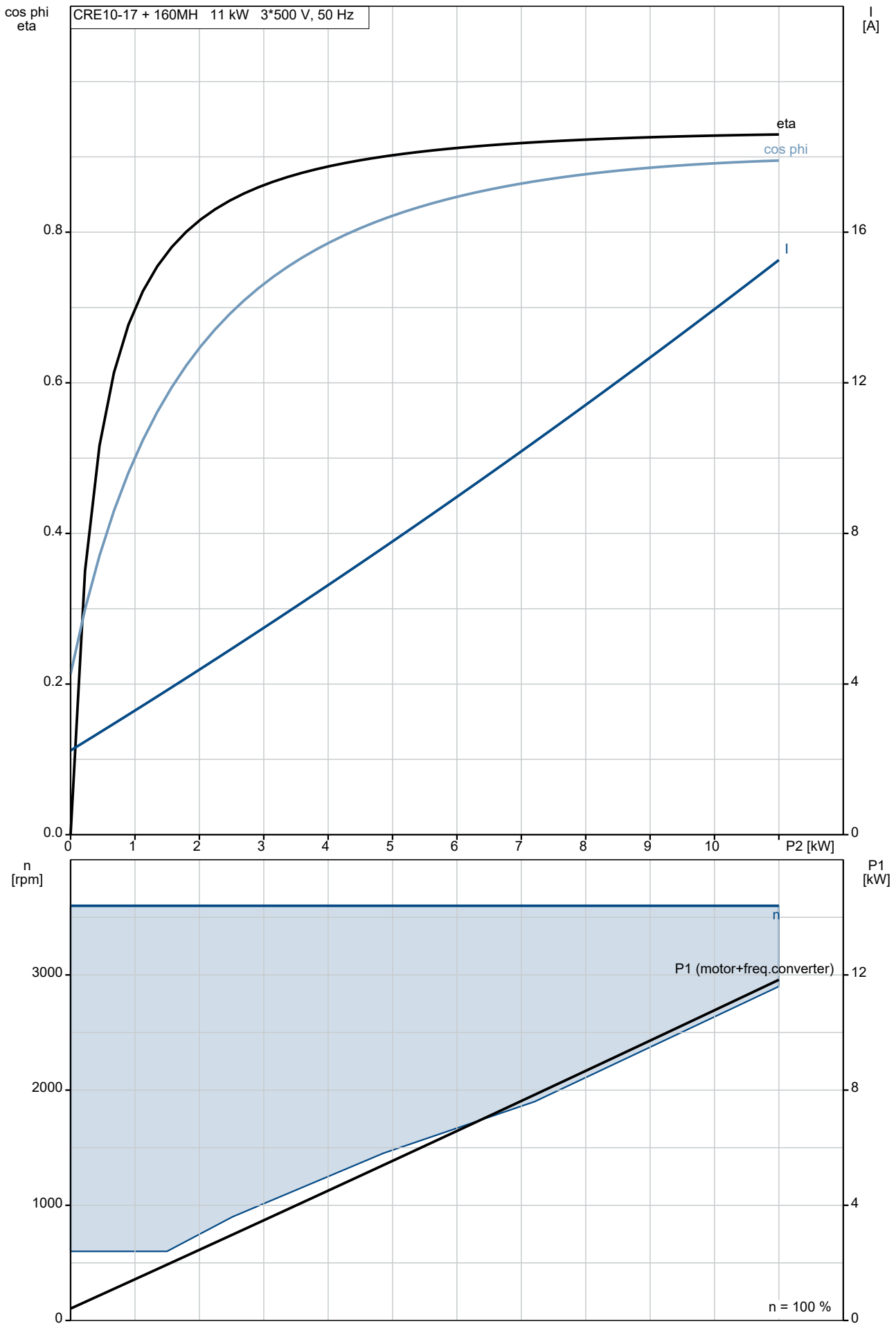

99071791 CRE 10-17 N-FJ-A-E-HQQE

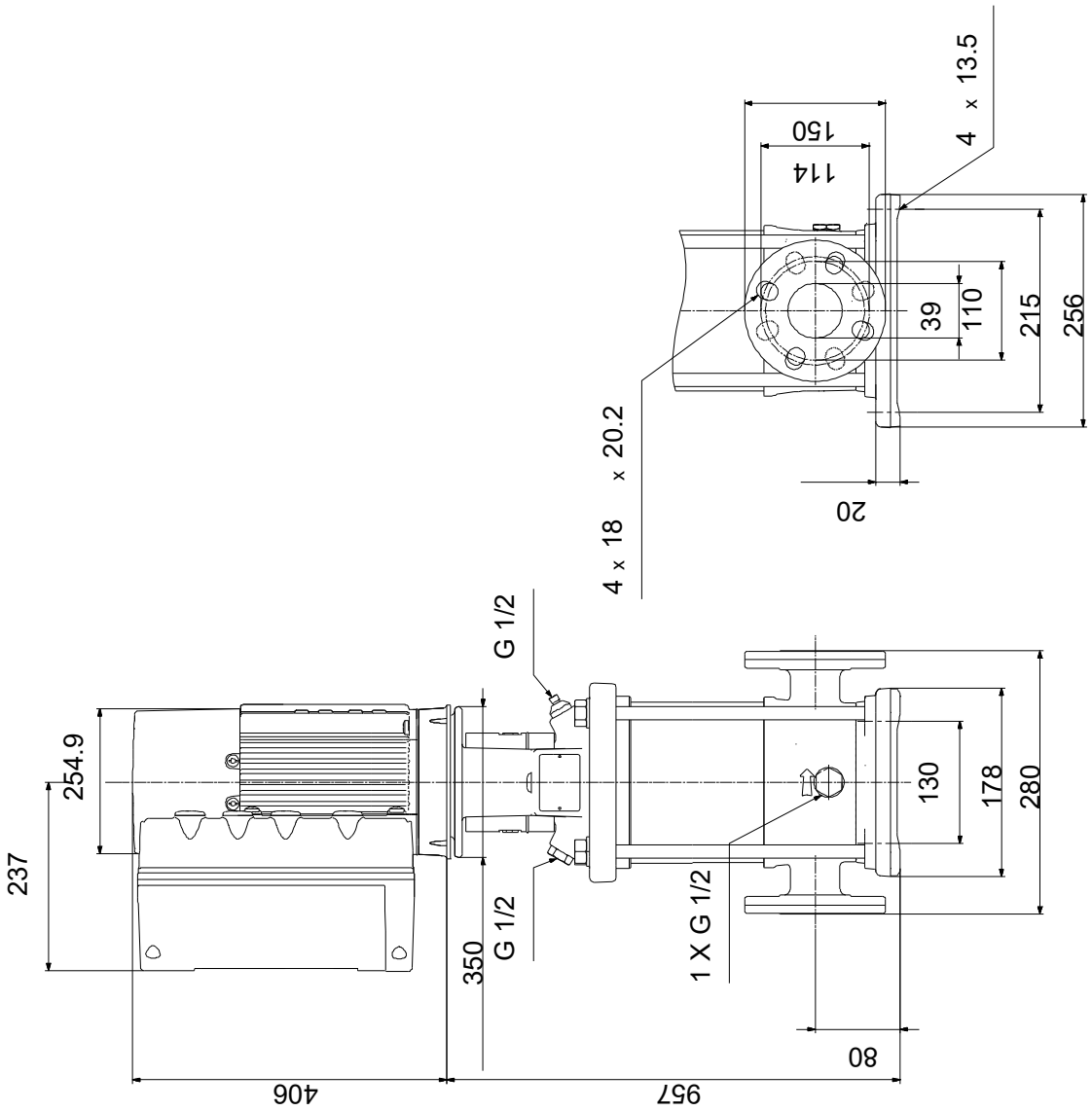

Note! All units are in [mm] unless others are stated.
Disclaimer: This simplified dimensional drawing does not show all details.

Spare parts CRE 10-17, Product No. 99071791
Produced After 1633 (production year and week number)

	Pos	Omschrijving	Opmerking tekst	Classificatie Gegevens	Onderdeelnr.	Aantal	Eenheid
-		Kit, chamber stack			96529403	1	pcs
-	80	Chamber stack		Bearing type: SIC		1	
-	4a	Intermediate chamber cpl.					3
		Guide cup					
		Bearing plate					
		Guide vane					
	3	Intermediate chamber					
	45	Neck ring cpl.					
	47	Bearing bush					
	65	Retainer					
-	4	Intermediate chamber cpl.					14
		Sand Lifter					
		Guide cup					
		Front plate					
		Guide vane					
	3	Intermediate chamber					
	45	Neck ring cpl.					
	65	Retainer					
	26a	Strap cpl.		Length (mm): 554MM			2
	26.c	Washer		Designation: DIN 125A			2
				Thickness: 1,6			
	26.b	Hex head screw					2
	44b	Inlet part					1
-	44a	Inlet part cpl.					1
		Guide cup					
		Inlet part					
	45	Neck ring cpl.					
	65	Retainer					
	47a	Bearing ring					3
	49	Impeller cpl.					17
-	51	Shaft, spline, cpl.					1
		Bar					
	62	Stop ring					
	64d	Spacing bush					1
	64c	Spacer					1
	64a	Spacing bush		Length (mm): 9.00			3
	64.d	Spacer					3
	64	Spacing pipe		Length (mm): 29.05			14
	66	Wedge lock washer					1
	67	Lock nut		Thread: M8			1
-		Kit, coupling			96511352	1	pcs
		Adjusting fork				1	
-	8	Coupling				1	
	9	Hex socket head cap screw		Designation: DIN 912			4
				Length (mm): 25			
				Thread: M10			
	10a	Coupling half					2
	10	Shaft pin		Diameter: 5			1
				Length (mm): 26			
-		Kit, coupling guard			96509614	1	pcs
	7.a	Combi Slot Torx screw				4	
	7	Coupling guard				2	
-		Kit, gaskets			96509609	1	pcs
		Gasket				2	
	24	O-ring				2	
	37	O-ring				2	
	38	O-ring				1	
	38	O-ring				1	
	38	O-ring				2	

Pos	Omschrijving	Opmerking tekst	Classificatie Gegevens	Onderdeelnr.	Aantal	Eenheid
60	Spring				4	
415	Gasket		Internal diameter: 44		2	
			Outer diameter: 60			
			Thickness: 2			
441b	Gasket		Internal diameter: 49		2	
			Outer diameter: 92			
			Thickness: 2			
-	Kit, plug			96511311	1	pcs
- 18	Air vent screw				1	
	Spindle					1
	Plug					1
25a	Drain plug				1	
25	Plug				1	
38	O-ring				1	
38	O-ring				1	
38	O-ring				2	
38	O-ring		Diameter: 5,3		1	
			Material type: FKM			
			Thickness: 2,4			
38	O-ring		Diameter: 16,3		1	
			Material type: FKM			
			Thickness: 2,4			
38	O-ring		Diameter: 16,3		2	
			Material type: FKM			
			Thickness: 2,4			
-	Kit, shaft seal HQQE			96511844	1	pcs
105	Shaft seal		Material type: HQQE		1	
-	Kit, wear parts			96511925	1	pcs
- 4a	Intermediate chamber cpl.				3	
	Sand Lifter					1
	Guide cup					1
	Bearing plate					1
	Guide vane					10
3	Intermediate chamber					1
45	Neck ring cpl.					1
47	Bearing bush					1
65	Retainer					1
26.c	Washer		Designation: DIN 125A		2	
			Thickness: 1,6			
26.b	Hex head screw				2	
45	Neck ring cpl.				19	
47a	Bearing ring				3	
62	Retaining ring				1	
64c	Spacer				1	
64a	Spacing bush		Length (mm): 9.00		3	
64.d	Spacer				3	
65	Retainer				19	
66	Wedge lock washer				1	
67	Lock nut		Thread: M8		1	
-	Motor				1	pcs
-	Kit, Ball bearing			98881526	1	
111	Ball bearing					1
154	Angular-contact bearing					1
156d	Seal ring					1
156c	Seal ring					1
158	Waved washer					2
-	Kit, Ball bearing			98881526	1	
111	Ball bearing					1
154	Angular-contact bearing					1
156d	Seal ring					1
156c	Seal ring					1
158	Waved washer					2
-	Kit, Blanking plug			99052476	1	
252b	Blind plug					1

Pos	Omschrijving	Opmerking tekst	Classificatie Gegevens	Onderdeelnr.	Aantal	Eenheid
252b	Plug cpl.					5
-	Kit, cable gland			98736115	1	
293	Cable glands set					1
-	Kit, connector plugs			98403113	1	
266	Connector plug 10-pole					1
266	Connector plug 2-pole					1
266	Connector plug 8-pole					1
266	Connector plug 8-pole					1
266	Connector plug 8-pole					1
266	Connector plug 3-pole					1
266	Connector plug 3-pole					1
266	Connector plug 3-pole					1
-	Kit, control box			98878613	1	
251d	Pan head thread forming screw					4
251b	Control box					1
251a	Control box cpl.					1
252b	Blind plug					1
252b	Plug cpl.					5
266	Connector plug 10-pole					1
266	Connector plug 8-pole					1
266	Connector plug 8-pole					1
266	Connector plug 8-pole					1
266	Connector plug 3-pole					1
266	Connector plug 3-pole					1
266	Connector plug 3-pole					1
268a	Base					2
268	Pan head screw					2
273b	Battery					1
273a	Cross recess Pan head screw					4
273	Funct. Module cpl.					1
275a	Pin					1
277b	Spring					4
277a	Cross recess Pan head screw					1
277	Cover					1
286	Spacer					1
287	Cover					1
288b	Retaining ring					8
288a	Pan head thread forming screw					8
288	Wire clamp					4
289a	Pan head thread forming screw					1
289	Wire clamp					1
290	Control panel, cpl.					1
301	Jumper					1
-	Kit, Control box upper			98869869	1	
251d	Pan head thread forming screw					4
251b	Control box					1
-	Kit, Control panel			98939973	1	
290	Control panel, cpl.					1
-	Kit, cover			98330622	1	
287	Cover					1
-	Kit, end shield (NDE)			98869886	1	
150b	O-ring					1
156c	Gamma ring					1
156c	Seal ring					1
156a	End shield NDE					1
158	Waved washer					1
200a	Grease nipple					1
206	Pan head thread forming screw					4
206	Hex socket head cap screw					4
207b	Nut					4
-	Kit, fan			98869879	1	
152	Pan head thread forming screw					4
156c	Seal ring					1
156	Fan					1

Pos	Omschrijving	Opmerking tekst	Classificatie Gegevens	Onderdeelnr.	Aantal	Eenheid
-	Kit, fan cover			98869873	1	
151	Fan cover				1	
152	Pan head thread forming screw				4	
-	Kit, flange (DE)			98869906	1	
	Glue				0	
150b	O-ring				1	
155a	Bearing cover				1	
156c	Seal ring				1	
156b	Flange				1	
185	Hex socket head cap screw				4	
201c	Drain plug				4	
201b	Blind plug				1	
201a	Grease nipple				1	
208b	Nut				4	
208a	Gasket				3	
208	Hex socket head cap screw		Designation: DIN912		3	
			Length (mm): 40			
			Thread: M5			
-	Kit, Funct. module			98334777	1	
273a	Cross recess Pan head screw				5	
273	Funct. Module cpl.				1	
275a	Pin				1	
286	Spacer				1	
-	Kit, Isolation cover			98859523	1	
277b	Spring				4	
277a	Cross recess Pan head screw				1	
277	Cover				1	
-	Kit, Lower part cpl.			98859573	1	
178	Pan head thread forming screw				4	
251a	Control box cpl.				1	
275a	Pin				1	
277a	Cross recess Pan head screw				1	
277	Cover				1	
-	Kit, motor			99010810	1	
	Hex socket head cap screw				2	
	Glue				0	
	Terminal				6	
66a	Washer				2	
118a	Hex socket head cap screw				4	
150b	O-ring				2	
150	Stator w/housing				1	
151	Fan cover				1	
152	Pan head thread forming screw				4	
153	Angular-contact bearing				1	
154	Ball bearing				1	
155a	Bearing cover				1	
156d	Gasket				1	
156c	Seal ring				1	
156c	Seal ring				1	
156b	Flange				1	
156a	End shield NDE				1	
156	Fan				1	
158	Waved washer				2	
172	Shaft w/rotor				1	
185	Hex socket head cap screw				4	
186	Drain plug				4	
187	Retaining ring				1	
195.a	Grease nipple				1	
195.a	Grease nipple				1	
196	Diaphragm				1	
203	Terminal plug				1	
208b	Nut				4	
208b	Nut				4	
208a	Gasket				3	

	Pos	Omschrijving	Opmerking tekst	Classificatie Gegevens	Onderdeelnr.	Aantal	Eenheid
	208	Hex socket head cap screw		Designation: DIN912			3
				Length (mm): 40			
				Thread: M5			
	289a	Pan head thread forming screw					2
-		Kit, plug			99028677	1	
	152	Pan head thread forming screw					2
	203	Terminal plug					1
	205	Gasket					1
-		Kit, screws			99028725	1	
	268a	Base					2
	268	Pan head screw					2
	288b	Retaining ring					8
	288a	Pan head thread forming screw					8
	288	Wire clamp					4
	289a	Pan head thread forming screw					1
	289	Wire clamp					1
		Lifting device			99140040	2	
	152	Pan head thread forming screw			99834207	2	
	152	Pan head thread forming screw			99814578	2	
	153	Angular-contact bearing			98466086	1	
	186	Drain plug			99980519	4	
	251d	Pan head thread forming screw			98995460	4	
	266	Connector plug 3-pole			99421265	1	
	1	Flange			98913788	1	pcs
	2a	Pump head			98824714	1	pcs
+	4a	Intermediate chamber cpl.			96538850	3	pcs
+	4a	Intermediate chamber cpl.			98371073	3	pcs
-	4	Intermediate chamber cpl.			96538818	14	pcs
	3	Intermediate chamber			96536045	1	
	3	Intermediate chamber			98415145	1	
	45	Neck ring cpl.			96538856	1	
	65	Retainer			98354675	1	
+	4	Intermediate chamber cpl.			98371071	14	pcs
	6	Base			98681110	1	pcs
	7.a	Combi Slot Torx screw			96886324	4	pcs
	10	Shaft pin		Diameter: 5	96536473	1	pcs
				Length (mm): 26			
	10	Shaft pin		Diameter: 5	96587588	1	pcs
				Length (mm): 26			
+	18	Air vent screw			96547461	1	pcs
+	18	Air vent screw			95061351	1	pcs
	25a	Drain plug			96535881	1	pcs
	26a	Strap cpl.		Length (mm): 554MM	98976490	2	pcs
	26.c	Washer		Designation: DIN 125A	99262704	2	pcs
				Thickness: 1,6			
	26.c	Washer		Designation: DIN 125A	99886930	2	pcs
				Thickness: 1,6			
	26	Staybolt			98982850	4	pcs
	28	Hex head screw		Length (mm): 25	99522923	4	pcs
				Thread: M12			
	32	Washer		Designation: DIN 125 A	98923051	4	pcs
				Internal diameter: 17			
				Outer diameter: 30			
				Thickness: 3			
	36	Hex nut		Thread: M16	96620480	4	pcs
	37	O-ring			96538857	2	pcs
	38	O-ring			99198791	1	pcs
	38	O-ring			99198815	2	pcs
	38	O-ring			99412727	2	pcs
	44b	Inlet part			98814595	1	pcs
+	44a	Inlet part cpl.			97973678	1	pcs
	47a	Bearing ring			96538795	3	pcs
	49	Impeller cpl.			96538796	17	pcs
	49	Impeller cpl.			98394441	17	pcs

	Pos	Omschrijving	Opmerking tekst	Classificatie Gegevens	Onderdeelnr.	Aantal	Eenheid
+	51	Shaft, spline, cpl.			98368620	1	pcs
	55	Outer sleeve			98812646	1	pcs
	60	Spring			96538963	4	pcs
	64d	Spacing bush			96538961	1	pcs
	64d	Spacing bush			96535114	1	pcs
	64c	Spacer			97980241	1	pcs
	64a	Spacing bush		Length (mm): 9.00	96538950	3	pcs
	64.d	Spacer			97516851	3	pcs
	64	Spacing pipe		Length (mm): 29.05	96535101	14	pcs
	66	Wedge lock washer			96536157	1	pcs
	66	Wedge lock washer			92575609	1	pcs
	67	Lock nut		Thread: M8	98277008	1	pcs
	76a	Rivet			96620489	2	pcs
	105	Shaft seal		Material type: HQQE	96538914	1	pcs