# Inventflow: Grundfos A-partner

## Grundfos CRIE 10-12 N-P-A-E-HQQE

Find the pump here:
https://inventflow.nl/en/pompenfilter/crie/grundfos-crie-10-12-n-p-a-e-hqqe

### Contact

info@inventflow.nl
+31 (0) 546 45 80 72

### Datasheet

| Qty. | Description |
|---|---|
| 1 | **CRIE 10-12 N-P-A-E-HQQE** |

**Note! Product picture may differ from actual product**

Product No.: 99071806

Vertical, multistage centrifugal pump with inlet and outlet ports on same the level (inline). Pump materials in contact with the liquid are in stainless steel. A cartridge shaft seal ensures high reliability, safe handling, and easy access and service. Power transmission is via a rigid split coupling. Pipe connection is via PJE (Victaulic®) couplings.

The pump is fitted with a 3-phase, fan-cooled, permanent-magnet, synchronous motor.

The motor efficiency is classified as IE5 in accordance with IEC 60034-30-2.

The motor includes a frequency converter and PI controller in the motor terminal box. This enables continuously variable control of the motor speed, which again enables adaptation of the performance to a given requirement.

An operating panel on the motor terminal box enables setting of required setpoint as well as setting of pump to "Min." or "Max." operation or to "Stop". The Grundfos Eye indicator on the operating panel provides visual indication of pump status:

- "Power on": Motor is running (rotating green indicator lights) or not running (permanently green indicator lights)
- "Warning": Motor is still running (rotating yellow indicator lights) or has stopped (permanently yellow indicator lights)
- "Alarm": Motor has stopped (flashing red indicator lights).

Communication with the pump is possible by means of Grundfos GO Remote (accessory). The remote control enables further settings as well as reading out of a number of parameters such as "Actual value", "Speed", "Power input" and total "Power consumption".

The terminal box has a number of inputs and outputs enabling the motor to be used in advanced applications where many inputs and outputs are required:

- two dedicated digital inputs
- three analog inputs, 0(4)-20 mA, 0-5 V, 0-10 V, 0.5 - 3.5 V; the factory-fitted pressure sensor is connected to one of these inputs
- 5 V voltage supply to potentiometer and sensor
- one analog output, 0-10 V, 0(4)-20 mA
- two configurable digital inputs or open-collector outputs
- two Pt100/Pt1000 inputs
- LiqTec, dry-running protection sensor input
- Grundfos Digital Sensor input and output
- 24 V voltage supply for sensors
- two signal-relay outputs (potential-free contacts)
- GENIbus connection
- interface for Grundfos CIM fieldbus module.

Liquid:

| | |
|---|---|
| Pumped liquid: | Water |
| Liquid temperature range: | -20 .. 120 °C |
| Selected liquid temperature: | 20 °C |
| Density: | 998.2 kg/m³ |

Technical:

| | |
|---|---|
| Pump speed on which pump data are based: | 3525 rpm |
| Rated flow: | 12.1 m³/h |

| Qty. | Description | |
|---|---|---|
| | Rated head: | 143.2 m |
| | Pump orientation: | Vertical |
| | Shaft seal arrangement: | Single |
| | Code for shaft seal: | HQQE |
| | Approvals on nameplate: | CE,EAC,UKCA,WRAS,ACS |
| | Curve tolerance: | ISO9906:2012 3B |
| | | |
| | Materials: | |
| | Base: | Stainless steel |
| | | EN 1.4408 |
| | | AISI 316 |
| | Impeller: | Stainless steel |
| | | EN 1.4301 |
| | | AISI 304 |
| | Bearing: | SIC |
| | | |
| | Installation: | |
| | Maximum ambient temperature: | 50 °C |
| | Maximum operating pressure: | 25 bar |
| | Max pressure at stated temp: | 25 bar / 120 °C |
| | | 25 bar / -20 °C |
| | Type of connection: | PJE |
| | Size of inlet connection: | DN 50 |
| | Size of outlet connection: | DN 50 |
| | Pressure rating for connection: | PN 50 |
| | Flange size for motor: | FF265 |
| | | |
| | Electrical data: | |
| | Motor standard: | IEC |
| | Motor type: | 132SF |
| | IE Efficiency class: | IE5 |
| | Rated power - P2: | 7.5 kW |
| | Power (P2) required by pump: | 7.5 kW |
| | Mains frequency: | 50 / 60 Hz |
| | Rated voltage: | 3 x 380-500 V |
| | Rated current: | 14.1-11.2 A |
| | Cos phi - power factor: | 0.93-0.89 |
| | Rated speed: | 360-4000 rpm |
| | Efficiency: | 92.5% |
| | Motor efficiency at full load: | 92.5 % |
| | Enclosure class (IEC 34-5): | IP55 |
| | Insulation class (IEC 85): | F |
| | Motor No: | 98971052 |
| | | |
| | Controls: | |
| | Frequency converter: | Built-in |
| | Pressure sensor: | Y |
| | | |
| | Others: | |
| | Minimum efficiency index, MEI ≥: | 0.70 |
| | DOE Pump Energy Index CL: | 0.00 |
| | DOE Pump Energy Index VL: | 0.00 |
| | Net weight: | 93 kg |
| | Gross weight: | 121 kg |
| | Shipping volume: | 0.37 m³ |
| | Country of origin: | DK |
| | Custom tariff no.: | 84137075 |

# 99071806 CRIE 10-12 N-P-A-E-HQQE

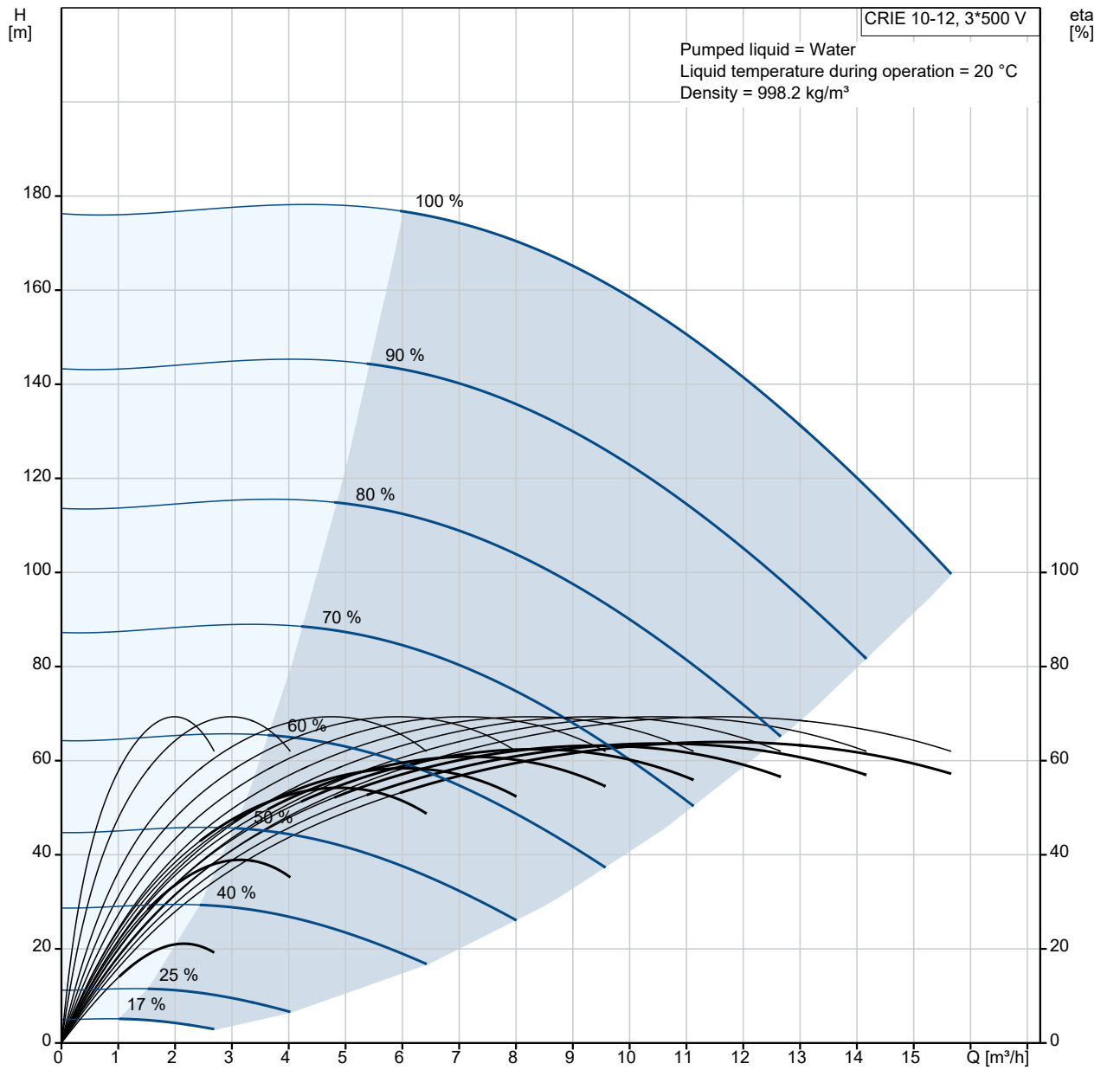


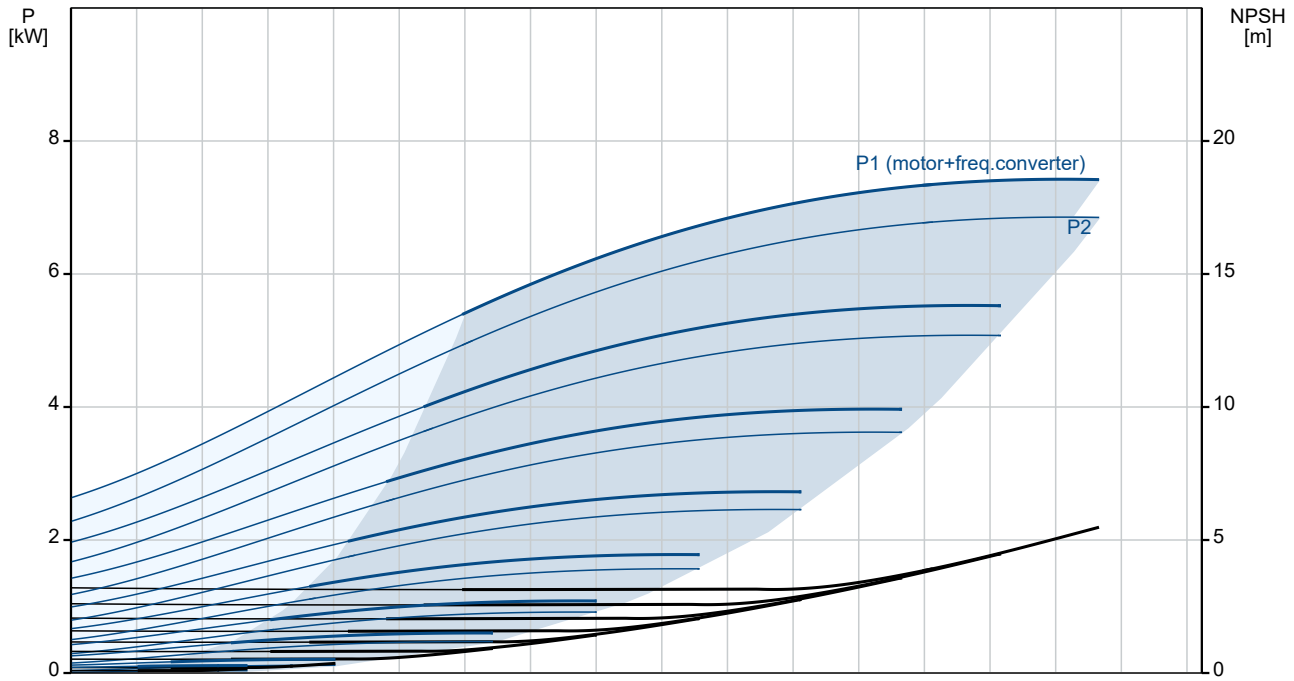

| Description | Value |
|---|---|
| **General information:** | |
| Product name: | CRIE 10-12 N-P-A-E-HQQE |
| Product No: | 99071806 |
| EAN number: | 5712606198320 |
| **Technical:** | |
| Pump speed on which pump data are based: | 3525 rpm |
| Rated flow: | 12.1 m³/h |
| Rated head: | 143.2 m |
| Maximum head: | 178 m |
| Stages: | 12 |
| Impellers: | 12 |
| Number of reduced-diameter impellers: | 0 |
| Low NPSH: | N |
| Pump orientation: | Vertical |
| Shaft seal arrangement: | Single |
| Code for shaft seal: | HQQE |
| Approvals on nameplate: | CE,EAC,UKCA,WRAS,ACS |
| Curve tolerance: | ISO9906:2012 3B |
| Pump version: | N |
| Model: | A |
| **Materials:** | |
| Base: | Stainless steel |
| Base: | EN 1.4408 |
| Base: | AISI 316 |
| Impeller: | Stainless steel |
| Impeller: | EN 1.4301 |
| Impeller: | AISI 304 |
| Material code: | A |
| Code for rubber: | E |
| Bearing: | SIC |
| **Installation:** | |
| Maximum ambient temperature: | 50 °C |
| Maximum operating pressure: | 25 bar |
| Max pressure at stated temp: | 25 bar / 120 °C |
| Max pressure at stated temp: | 25 bar / -20 °C |
| Type of connection: | PJE |
| Size of inlet connection: | DN 50 |
| Size of outlet connection: | DN 50 |
| Pressure rating for connection: | PN 50 |
| Flange size for motor: | FF265 |
| Connect code: | P |
| **Liquid:** | |
| Pumped liquid: | Water |
| Liquid temperature range: | -20 .. 120 °C |
| Selected liquid temperature: | 20 °C |
| Density: | 998.2 kg/m³ |
| **Electrical data:** | |
| Motor standard: | IEC |
| Motor type: | 132SF |
| IE Efficiency class: | IE5 |
| Rated power - P2: | 7.5 kW |
| Power (P2) required by pump: | 7.5 kW |
| Mains frequency: | 50 / 60 Hz |
| Rated voltage: | 3 x 380-500 V |
| Rated current: | 14.1-11.2 A |
| Cos phi - power factor: | 0.93-0.89 |
| Rated speed: | 360-4000 rpm |
| Efficiency: | 92.5% |
| Motor efficiency at full load: | 92.5 % |
| Enclosure class (IEC 34-5): | IP55 |
| Insulation class (IEC 85): | F |
| Motor protec: | ELEC |

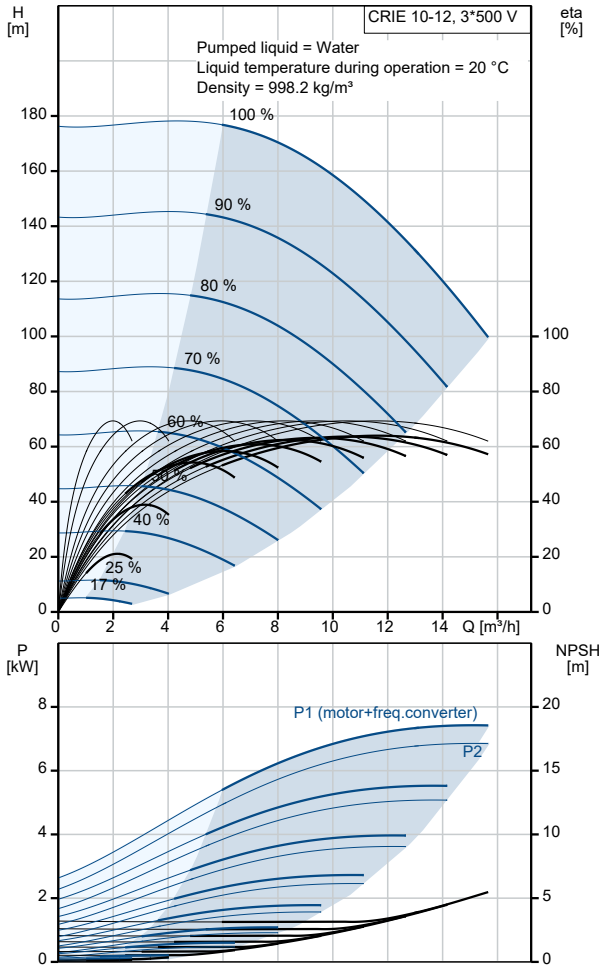

| Description | Value |
|---|---|
| Motor No: | 98971052 |
| **Controls:** | |
| Control panel: | Standard |
| Function Module: | FM300 - Advanced |
| Frequency converter: | Built-in |
| Pressure sensor: | Y |
| **Others:** | |
| Minimum efficiency index, MEI ≥: | 0.70 |
| DOE Pump Energy Index CL: | 0.00 |
| DOE Pump Energy Index VL: | 0.00 |
| Net weight: | 93 kg |
| Gross weight: | 121 kg |
| Shipping volume: | 0.37 $m^3$ |
| Config. file no: | 99059004 |
| Country of origin: | DK |
| Custom tariff no.: | 84137075 |

# 99071806 CRIE 10-12 N-P-A-E-HQQE

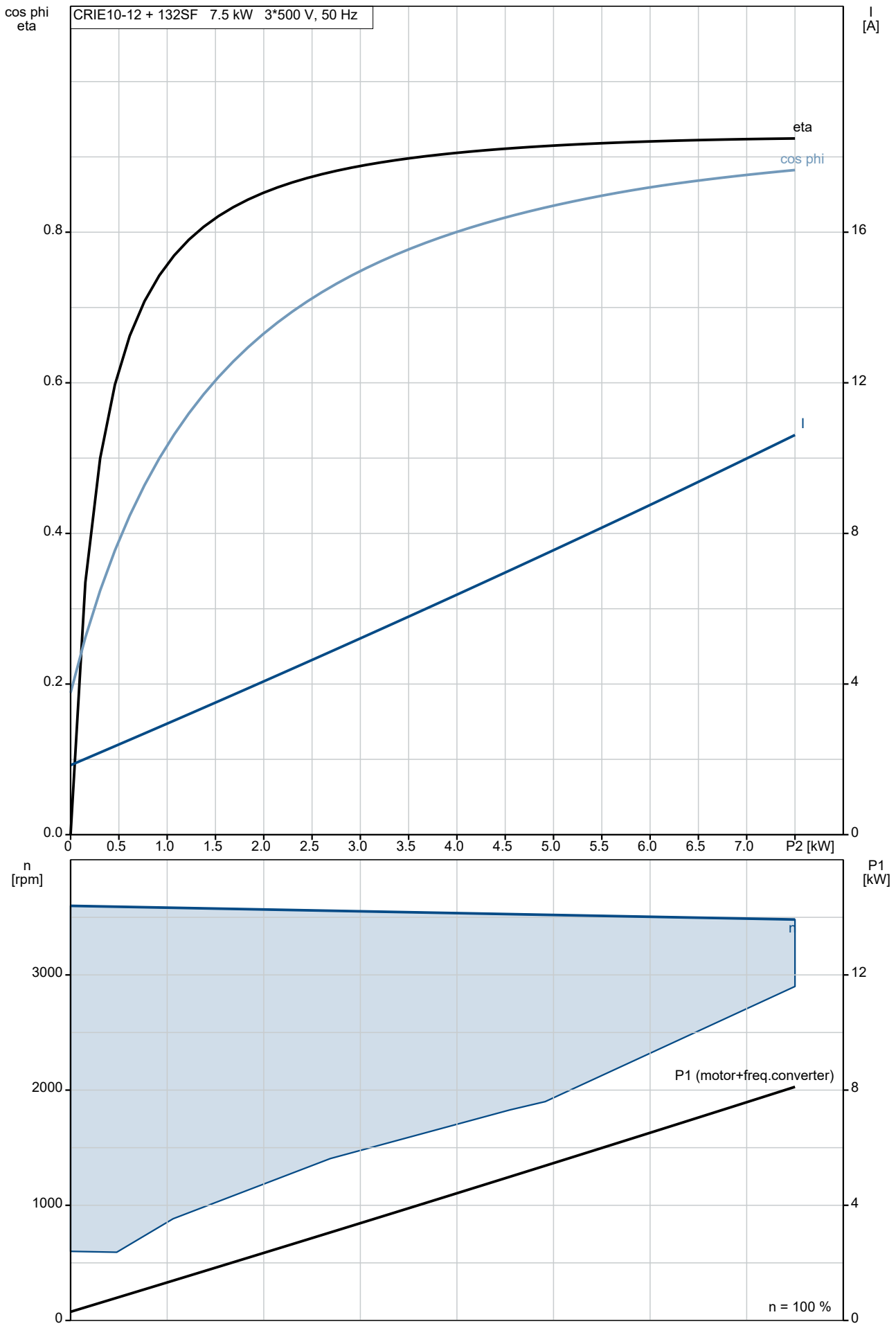

# 99071806 CRIE 10-12 N-P-A-E-HQQE

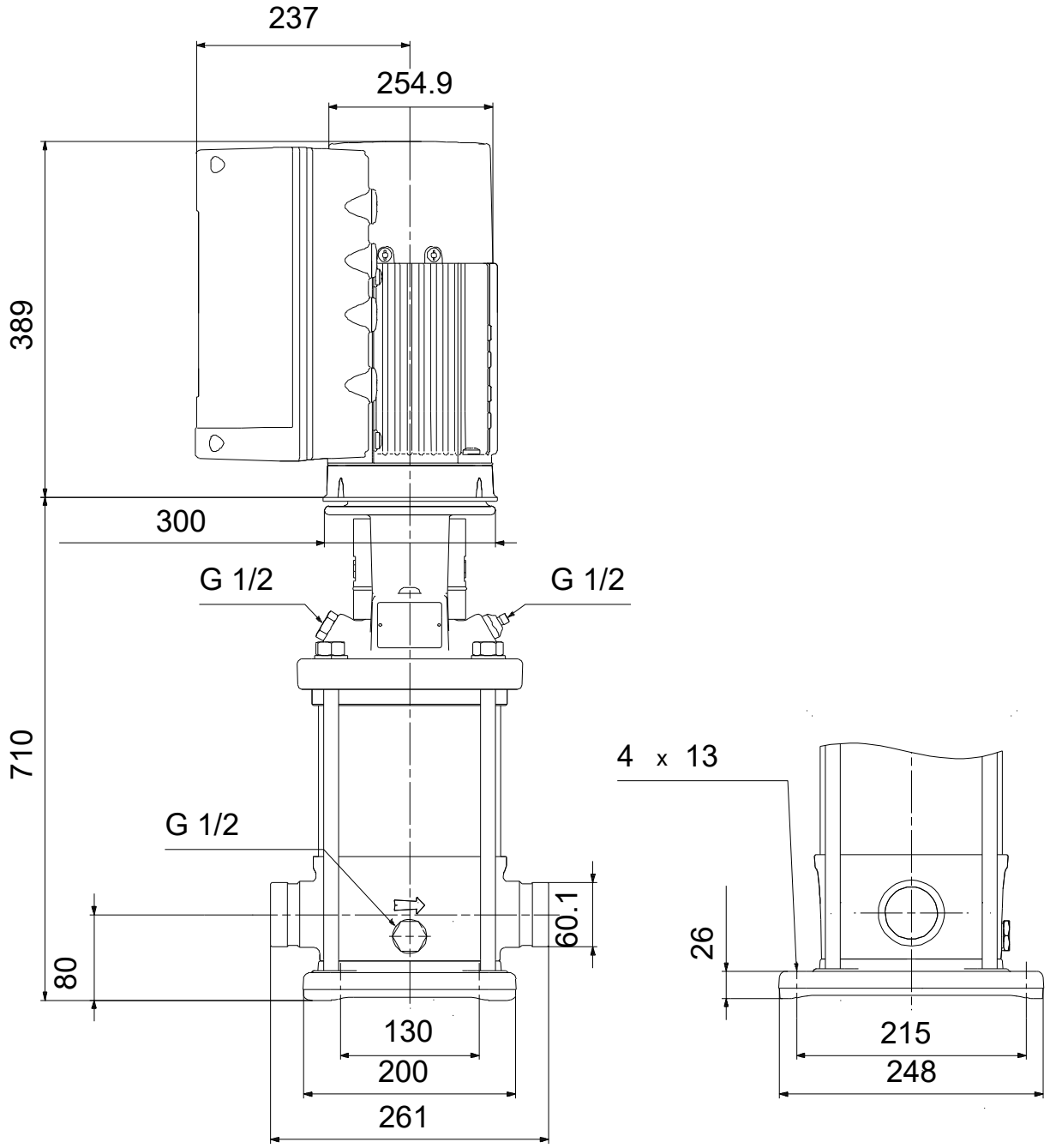


Note! All units are in [mm] unless others are stated.
Disclaimer: This simplified dimensional drawing does not show all details.

# Spare parts CRIE 10-12, Product No. 99071806
# Produced After 1633 (production year and week number)

| Pos | Omschrijving | Opmerking tekst | Classificatie Gegevens | Onderdeelnr | Aanta | Eenhei |
|---|---|---|---|---|---|---|
| - | Kit, chamber stack | | | 96491704 | 1 | pcs |
| - 80 | Chamber stack | | Bearing type: SIC | | 1 | |
| - 3 | Top intermediate chamber | | | | | 1 |
| | Spare, turbulence optimizer KP | | | | | |
| | Guide vane | | | | | |
| - 4a | Intermediate chamber cpl. | | | | | 2 |
| | Guide cup | | | | | |
| | Bearing plate | | | | | |
| | Guide vane | | | | | |
| 3 | Intermediate chamber | | | | | |
| 45 | Neck ring cpl. | | | | | |
| 47 | Bearing bush | | | | | |
| 65 | Retainer | | | | | |
| - 4 | Intermediate chamber cpl. | | | | | 9 |
| | Sand Lifter | | | | | |
| | Guide cup | | | | | |
| | Front plate | | | | | |
| | Guide vane | | | | | |
| 3 | Intermediate chamber | | | | | |
| 45 | Neck ring cpl. | | | | | |
| 65 | Retainer | | | | | |
| 26a | Strap cpl. | | | | | 2 |
| 26.c | Washer | | Designation: DIN 125A | | | 2 |
| | | | Thickness: 1,6 | | | |
| 26.b | Hex head screw | | | | | 2 |
| 44b | Inlet part | | | | | 1 |
| - 44a | Inlet part cpl. | | | | | 1 |
| | Guide cup | | | | | |
| | Inlet part | | | | | |
| 45 | Neck ring cpl. | | | | | |
| 65 | Retainer | | | | | |
| 47a | Bearing ring | | | | | 2 |
| 49 | Impeller cpl. | | | | | 12 |
| - 51 | Shaft, spline, cpl. | | | | | 1 |
| | Bar | | | | | |
| 62 | Stop ring | | | | | |
| 64c | Spacer | | | | | 1 |
| 64a | Spacing bush | | Length (mm): 9.00 | | | 2 |
| 64.d | Spacer | | | | | 2 |
| 64 | Spacing pipe | | Length (mm): 29.05 | | | 9 |
| 66 | Wedge lock washer | | | | | 1 |
| 67 | Lock nut | | Thread: M8 | | | 1 |
| 69 | Spacing bush | | Length (mm): 18.00 | | | 1 |
| - | Kit, coupling | | | 96511351 | 1 | pcs |
| | Adjusting fork | | | | 1 | |
| - 8 | Coupling | | | | 1 | |
| 9 | Hex socket head cap screw | | Designation: DIN 912 | | | 4 |
| | | | Length (mm): 25 | | | |
| | | | Thread: M10 | | | |
| 10a | Coupling half | | | | | 1 |
| 10 | Shaft pin | | Diameter: 5 | | | 1 |
| | | | Length (mm): 26 | | | |
| - | Kit, coupling guard | | | 96509613 | 1 | pcs |
| 7.a | Combi Slot Torx screw | | | | 4 | |
| 7 | Coupling guard | | | | 2 | |
| - | Kit, gaskets | | | 96509609 | 1 | pcs |
| | Gasket | | | | 2 | |
| 24 | O-ring | | | | 2 | |
| 37 | O-ring | | | | 2 | |

| Pos | Omschrijving | Opmerking tekst | Classificatie Gegevens | Onderdeelnr | Aanta | Eenhei |
|---|---|---|---|---|---|---|
| 38 | O-ring | | | | 1 | |
| 38 | O-ring | | | | 1 | |
| 38 | O-ring | | | | 2 | |
| 60 | Spring | | | | 4 | |
| 415 | Gasket | | Internal diameter: 44 | | 2 | |
| | | | Outer diameter: 60 | | | |
| | | | Thickness: 2 | | | |
| 441b | Gasket | | Internal diameter: 49 | | 2 | |
| | | | Outer diameter: 92 | | | |
| | | | Thickness: 2 | | | |
| - | Kit, plug | | | 96511312 | 1 | pcs |
| - 18 | Air vent screw | | | | 1 | |
| | Spindle | | | | | 1 |
| | Plug | | | | | 1 |
| 25a | Drain plug | | | | 1 | |
| 25 | Plug | | | | 1 | |
| 38 | O-ring | | | | 1 | |
| 38 | O-ring | | | | 1 | |
| 38 | O-ring | | | | 2 | |
| 38 | O-ring | | Diameter: 5,3 | | 1 | |
| | | | Material type: FKM | | | |
| | | | Thickness: 2,4 | | | |
| 38 | O-ring | | Diameter: 16,3 | | 1 | |
| | | | Material type: FKM | | | |
| | | | Thickness: 2,4 | | | |
| 38 | O-ring | | Diameter: 16,3 | | 2 | |
| | | | Material type: FKM | | | |
| | | | Thickness: 2,4 | | | |
| - | Kit, shaft seal HQQE | | | 96511844 | 1 | pcs |
| 105 | Shaft seal | | Material type: HQQE | | 1 | |
| - | Kit, wear parts | | Material type: SIC | 96511922 | 1 | pcs |
| - 4a | Intermediate chamber cpl. | | | | 2 | |
| | Sand Lifter | | | | | 1 |
| | Guide cup | | | | | 1 |
| | Bearing plate | | | | | 1 |
| | Guide vane | | | | | 10 |
| 3 | Intermediate chamber | | | | | 1 |
| 45 | Neck ring cpl. | | | | | 1 |
| 47 | Bearing bush | | | | | 1 |
| 65 | Retainer | | | | | 1 |
| 26.c | Washer | | Designation: DIN 125A | | 2 | |
| | | | Thickness: 1,6 | | | |
| 26.b | Hex head screw | | | | 2 | |
| 45 | Neck ring cpl. | | | | 12 | |
| 47a | Bearing ring | | | | 2 | |
| 62 | Retaining ring | | | | 1 | |
| 64c | Spacer | | | | 1 | |
| 64a | Spacing bush | | Length (mm): 9.00 | | 2 | |
| 64.d | Spacer | | | | 2 | |
| 65 | Retainer | | | | 12 | |
| 66 | Wedge lock washer | | | | 1 | |
| 67 | Lock nut | | Thread: M8 | | 1 | |
| - | Motor | | | | 1 | pcs |
| - | Kit, Blanking plug | | | 99052476 | 1 | |
| 252b | Blind plug | | | | | 1 |
| 252b | Plug cpl. | | | | | 5 |
| - | Kit, cable gland | | | 98736115 | 1 | |
| 293 | Cable glands set | | | | | 1 |
| - | Kit, connector plugs | | | 98403113 | 1 | |
| 266 | Connector plug 10-pole | | | | | 1 |
| 266 | Connector plug 2-pole | | | | | 1 |
| 266 | Connector plug 8-pole | | | | | 1 |

| Pos | Omschrijving | Opmerking tekst | Classificatie Gegevens | Onderdeelnr | Aanta | Eenhei |
|---|---|---|---|---|---|---|
| 266 | Connector plug 8-pole | | | | | 1 |
| 266 | Connector plug 8-pole | | | | | 1 |
| 266 | Connector plug 3-pole | | | | | 1 |
| 266 | Connector plug 3-pole | | | | | 1 |
| 266 | Connector plug 3-pole | | | | | 1 |
| - | Kit, control box | | | 98878613 | 1 | |
| 251d | Pan head thread forming screw | | | | | 4 |
| 251b | Control box | | | | | 1 |
| 251a | Control box cpl. | | | | | 1 |
| 252b | Blind plug | | | | | 1 |
| 252b | Plug cpl. | | | | | 5 |
| 266 | Connector plug 10-pole | | | | | 1 |
| 266 | Connector plug 8-pole | | | | | 1 |
| 266 | Connector plug 8-pole | | | | | 1 |
| 266 | Connector plug 8-pole | | | | | 1 |
| 266 | Connector plug 3-pole | | | | | 1 |
| 266 | Connector plug 3-pole | | | | | 1 |
| 266 | Connector plug 3-pole | | | | | 1 |
| 268a | Base | | | | | 2 |
| 268 | Pan head screw | | | | | 2 |
| 273b | Battery | | | | | 1 |
| 273a | Cross recess Pan head screw | | | | | 4 |
| 273 | Funct. Module cpl. | | | | | 1 |
| 275a | Pin | | | | | 1 |
| 277b | Spring | | | | | 4 |
| 277a | Cross recess Pan head screw | | | | | 1 |
| 277 | Cover | | | | | 1 |
| 286 | Spacer | | | | | 1 |
| 287 | Cover | | | | | 1 |
| 288b | Retaining ring | | | | | 8 |
| 288a | Pan head thread forming screw | | | | | 8 |
| 288 | Wire clamp | | | | | 4 |
| 289a | Pan head thread forming screw | | | | | 1 |
| 289 | Wire clamp | | | | | 1 |
| 290 | Control panel, cpl. | | | | | 1 |
| 301 | Jumper | | | | | 1 |
| - | Kit, Control box upper | | | 98869869 | 1 | |
| 251d | Pan head thread forming screw | | | | | 4 |
| 251b | Control box | | | | | 1 |
| - | Kit, Control panel | | | 98939973 | 1 | |
| 290 | Control panel, cpl. | | | | | 1 |
| - | Kit, cover | | | 98330622 | 1 | |
| 287 | Cover | | | | | 1 |
| - | Kit, end shield (NDE) | | | 98869885 | 1 | |
| 150b | O-ring | | | | | 1 |
| 156c | Seal ring | | | | | 1 |
| 156.a | End shield NDE | | | | | 1 |
| 157 | O-ring | | Diameter: 62 | | | 1 |

| Pos | Omschrijving | Opmerking tekst | Classificatie Gegevens | Onderdeelnr | Aanta | Eenhei |
|---|---|---|---|---|---|---|
| | | | Material type: NBR | | | |
| | | | Thickness: 3 | | | |
| 158 | Waved washer | | | | | 1 |
| 206 | Pan head thread forming screw | | | | | 4 |
| 206 | Hex socket head cap screw | | | | | 4 |
| 207b | Nut | | | | | 4 |
| - | Kit, fan | | | 98869879 | 1 | |
| 152 | Pan head thread forming screw | | | | | 4 |
| 156c | Seal ring | | | | | 1 |
| 156 | Fan | | | | | 1 |
| - | Kit, fan cover | | | 99957566 | 1 | |
| 151 | Fan cover | | | | | 1 |
| 152 | Pan head thread forming screw | | | | | 4 |
| - | Kit, flange (DE) | | | 98869905 | 1 | |
| | Glue | | | | | 0 |
| 150b | O-ring | | | | | 1 |
| 155a | Bearing cover | | | | | 1 |
| 156c | Seal ring | | | | | 1 |
| 156b | Flange | | | | | 1 |
| 185 | Hex socket head cap screw | | | | | 4 |
| 201c | Drain plug | | | | | 4 |
| 208b | Nut | | | | | 4 |
| 208a | Gasket | | | | | 3 |
| 208 | Hex socket head cap screw | | Designation: DIN912 | | | 3 |
| | | | Length (mm): 40 | | | |
| | | | Thread: M5 | | | |
| - | Kit, Funct. module | | | 98334777 | 1 | |
| 273a | Cross recess Pan head screw | | | | | 5 |
| 273 | Funct. Module cpl. | | | | | 1 |
| 275a | Pin | | | | | 1 |
| 286 | Spacer | | | | | 1 |
| - | Kit, Isolation cover | | | 98859523 | 1 | |
| 277b | Spring | | | | | 4 |
| 277a | Cross recess Pan head screw | | | | | 1 |
| 277 | Cover | | | | | 1 |
| - | Kit, Lower part cpl. | | | 98859573 | 1 | |
| 178 | Pan head thread forming screw | | | | | 4 |
| 251a | Control box cpl. | | | | | 1 |
| 275a | Pin | | | | | 1 |
| 277a | Cross recess Pan head screw | | | | | 1 |
| 277 | Cover | | | | | 1 |
| - | Kit, motor | | | 99010792 | 1 | |
| | Hex socket head cap screw | | | | | 2 |
| | Glue | | | | | 0 |
| | Terminal | | | | | 6 |
| 66a | Washer | | | | | 2 |
| 111 | Ball bearing | | Designation: 6206.2Z.C3.SYN | | | 1 |
| 118a | Hex socket head cap screw | | | | | 4 |

| Pos | Omschrijving | Opmerking tekst | Classificatie Gegevens | Onderdeelnr | Aanta | Eenhei |
|---|---|---|---|---|---|---|
| 150b | O-ring | | | | | 2 |
| 150 | Stator w/housing | | | | | 1 |
| 151 | Fan cover | | | | | 1 |
| 152 | Pan head thread forming screw | | | | | 4 |
| 153 | Angular-contact bearing | | | | | 1 |
| 155a | Bearing cover | | | | | 1 |
| 156d | Gasket | | | | | 1 |
| 156c | Seal ring | | | | | 1 |
| 156c | Seal ring | | | | | 1 |
| 156b | Flange | | | | | 1 |
| 156.a | End shield NDE | | | | | 1 |
| 156 | Fan | | | | | 1 |
| 157 | O-ring | | Diameter: 62 | | | 1 |
| | | | Material type: NBR | | | |
| | | | Thickness: 3 | | | |
| 158 | Waved washer | | | | | 2 |
| 172 | Shaft w/rotor | | | | | 1 |
| 185 | Hex socket head cap screw | | | | | 4 |
| 186 | Drain plug | | | | | 4 |
| 187 | Retaining ring | | | | | 1 |
| 203 | Terminal plug | | | | | 1 |
| 208b | Nut | | | | | 4 |
| 208b | Nut | | | | | 4 |
| 208a | Gasket | | | | | 3 |
| 208 | Hex socket head cap screw | | Designation: DIN912 | | | 3 |
| | | | Length (mm): 40 | | | |
| | | | Thread: M5 | | | |
| 289a | Pan head thread forming screw | | | | | 2 |
| - | Kit, plug | | | 99028677 | 1 | |
| 152 | Pan head thread forming screw | | | | | 2 |
| 203 | Terminal plug | | | | | 1 |
| 205 | Gasket | | | | | 1 |
| - | Kit, screws | | | 99028725 | 1 | |
| 268a | Base | | | | | 2 |
| 268 | Pan head screw | | | | | 2 |
| 288b | Retaining ring | | | | | 8 |
| 288a | Pan head thread forming screw | | | | | 8 |
| 288 | Wire clamp | | | | | 4 |
| 289a | Pan head thread forming screw | | | | | 1 |
| 289 | Wire clamp | | | | | 1 |
| - | Kit, staybolts | | | 98881543 | 1 | |
| 181 | Pan head staybolt | | | | | 4 |
| | Lifting device | | | 99140040 | 2 | |
| 111 | Ball bearing | | Designation: 6206.2Z.C3.SYN | 99078033 | 1 | |
| 111 | Ball bearing | | Designation: 6206.2Z.C3.SYN | 97501070 | 1 | |
| 152 | Pan head thread forming screw | | | 99834207 | 4 | |
| 152 | Pan head thread forming screw | | | 99814578 | 4 | |
| 153 | Angular-contact bearing | | | 98412045 | 1 | |
| 153 | Angular-contact bearing | | | 98576644 | 1 | |
| 186 | Drain plug | | | 99980519 | 4 | |

| Pos | Omschrijving | Opmerking tekst | Classificatie Gegevens | Onderdeelnr | Aanta | Eenhei |
|---|---|---|---|---|---|---|
| 251d | Pan head thread forming screw | | | 98995460 | 4 | |
| 266 | Connector plug 3-pole | | | 99421265 | 1 | |
| 1a | Pump head | | | 98914854 | 1 | pcs |
| 1 | Flange | | | 99104283 | 1 | pcs |
| 2 | Pump cover | | | 98481138 | 1 | pcs |
| 3 | Top intermediate chamber | | | 96538970 | 1 | pcs |
| 3 | Top intermediate chamber | | | 98415149 | 1 | pcs |
| 4a | Intermediate chamber cpl. | | | 96538850 | 2 | pcs |
| 4a | Intermediate chamber cpl. | | | 98371073 | 2 | pcs |
| - 4 | Intermediate chamber cpl. | | | 96538818 | 9 | pcs |
| 3 | Intermediate chamber | | | 96536045 | 1 | |
| 3 | Intermediate chamber | | | 98415145 | 1 | |
| 45 | Neck ring cpl. | | | 96538856 | 1 | |
| 65 | Retainer | | | 98354675 | 1 | |
| 4 | Intermediate chamber cpl. | | | 98371071 | 9 | pcs |
| 6 | Base | | | 98654159 | 1 | pcs |
| 7.a | Combi Slot Torx screw | | | 96886324 | 4 | pcs |
| 10 | Shaft pin | | Diameter: 5 | 96536473 | 1 | pcs |
| | | | Length (mm): 26 | | | |
| 10 | Shaft pin | | Diameter: 5 | 96587588 | 1 | pcs |
| | | | Length (mm): 26 | | | |
| 18 | Air vent screw | | | 96547461 | 1 | pcs |
| 18 | Air vent screw | | | 95061351 | 1 | pcs |
| 26a | Strap cpl. | | | 98984431 | 2 | pcs |
| 26.c | Washer | | Designation: DIN 125A | 99262704 | 2 | pcs |
| | | | Thickness: 1,6 | | | |
| 26.c | Washer | | Designation: DIN 125A | 99886930 | 2 | pcs |
| | | | Thickness: 1,6 | | | |
| 26 | Staybolt | | | 98902001 | 4 | pcs |
| 32 | Washer | | Designation: DIN 125 A | 98923051 | 4 | pcs |
| | | | Internal diameter: 17 | | | |
| | | | Outer diameter: 30 | | | |
| | | | Thickness: 3 | | | |
| 36 | Hex nut | | Thread: M16 | 96620480 | 4 | pcs |
| 37 | O-ring | | | 96538857 | 2 | pcs |
| 38 | O-ring | | | 99198791 | 1 | pcs |
| 38 | O-ring | | | 99198815 | 2 | pcs |
| 38 | O-ring | | | 99412727 | 2 | pcs |
| 44b | Inlet part | | | 98814593 | 1 | pcs |
| 44a | Inlet part cpl. | | | 97973678 | 1 | pcs |
| 47a | Bearing ring | | | 96538795 | 2 | pcs |
| 49 | Impeller cpl. | | | 96538796 | 12 | pcs |
| 49 | Impeller cpl. | | | 98394441 | 12 | pcs |
| 51 | Shaft, spline, cpl. | | | 98368615 | 1 | pcs |
| 55 | Outer sleeve | | | 98812628 | 1 | pcs |
| 56 | Base plate | | | 98824711 | 1 | pcs |
| 60 | Spring | | | 96538963 | 4 | pcs |
| 64c | Spacer | | | 97980241 | 1 | pcs |
| 64a | Spacing bush | | Length (mm): 9.00 | 96538950 | 2 | pcs |
| 64.d | Spacer | | | 97516851 | 2 | pcs |
| 64 | Spacing pipe | | Length (mm): 29.05 | 96535101 | 9 | pcs |
| 66 | Wedge lock washer | | | 96536157 | 1 | pcs |
| 66 | Wedge lock washer | | | 92575609 | 1 | pcs |
| 67 | Lock nut | | Thread: M8 | 98277008 | 1 | pcs |
| 69 | Spacing bush | | Length (mm): 18.00 | 96538948 | 1 | pcs |
| 76a | Rivet | | | 96620489 | 2 | pcs |
| 105 | Shaft seal | | Material type: HQQE | 96538914 | 1 | pcs |