Inventflow: Grundfos A-partner

Grundfos CRE 45-1 A-F-A-E-HQQE

Find the pump here:
https://inventflow.nl/en/pompenfilter/cre/grundfos-cre-45-1-a-f-a-e-hqqe

Contact

info@inventflow.nl
+31 (0) 546 45 80 72

Datasheet

Qty.	Description
1	**CRE 45-1 A-F-A-E-HQQE**

Product No.: 99072011

Vertical, multistage centrifugal pump with inlet and outlet ports on same the level (inline). The pump head and base are in cast iron – all other wetted parts are in stainless steel. A cartridge shaft seal ensures high reliability, safe handling, and easy access and service. Power transmission is via a rigid split coupling. Pipe connection is via DIN flanges.

The pump is fitted with a 3-phase, fan-cooled, permanent-magnet, synchronous motor.

The motor efficiency is classified as IE5 in accordance with IEC 60034-30-2.

The motor includes a frequency converter and PI controller in the motor terminal box. This enables continuously variable control of the motor speed, which again enables adaptation of the performance to a given requirement.

An operating panel on the motor terminal box enables setting of required setpoint as well as setting of pump to "Min." or "Max." operation or to "Stop". The Grundfos Eye indicator on the operating panel provides visual indication of pump status:

- "Power on": Motor is running (rotating green indicator lights) or not running (permanently green indicator lights)
- "Warning": Motor is still running (rotating yellow indicator lights) or has stopped (permanently yellow indicator lights)
- "Alarm": Motor has stopped (flashing red indicator lights).

Communication with the pump is possible by means of Grundfos GO Remote (accessory). The remote control enables further settings as well as reading out of a number of parameters such as "Actual value", "Speed", "Power input" and total "Power consumption".

The terminal box has a number of inputs and outputs enabling the motor to be used in advanced applications where many inputs and outputs are required:

- two dedicated digital inputs
- three analog inputs, 0(4)-20 mA, 0-5 V, 0-10 V, 0.5 - 3.5 V
- 5 V voltage supply to potentiometer and sensor
- one analog output, 0-10 V, 0(4)-20 mA
- two configurable digital inputs or open-collector outputs
- two Pt100/Pt1000 inputs
- LiqTec, dry-running protection sensor input
- Grundfos Digital Sensor input and output
- 24 V voltage supply for sensors
- two signal-relay outputs (potential-free contacts)
- GENIbus connection
- interface for Grundfos CIM fieldbus module.

Liquid:

Pumped liquid:	Water
Liquid temperature range:	-30 .. 120 °C
Selected liquid temperature:	20 °C
Density:	998.2 kg/m³

Technical:

Pump speed on which pump data are based:	3525 rpm
Rated flow:	54 m³/h
Rated head:	28.1 m
Pump orientation:	Vertical
Shaft seal arrangement:	Single
Code for shaft seal:	HQQE
Approvals on nameplate:	CE,EAC,UKCA,WRAS,ACS
Curve tolerance:	ISO9906:2012 3B

Materials:

Base:	Cast iron EN 1563 EN-GJS-500-7

Qty.	Description	
		ASTM A536 80-55-06
	Impeller:	Stainless steel
		EN 1.4301
		AISI 304
	Bearing:	SIC
	Support bearing:	Graflon
	Installation:	
	Maximum ambient temperature:	50 °C
	Maximum operating pressure:	16 bar
	Max pressure at stated temp:	16 bar / 120 °C
		16 bar / -30 °C
	Type of connection:	DIN
	Size of inlet connection:	DN 80
	Size of outlet connection:	DN 80
	Pressure rating for connection:	PN 40
	Flange size for motor:	FF265
	Electrical data:	
	Motor standard:	IEC
	Motor type:	132SF
	IE Efficiency class:	IE5
	Rated power - P2:	7.5 kW
	Power (P2) required by pump:	7.5 kW
	Mains frequency:	50 / 60 Hz
	Rated voltage:	3 x 380-500 V
	Rated current:	14.1-11.2 A
	Cos phi - power factor:	0.93-0.89
	Rated speed:	360-4000 rpm
	Efficiency:	92.5%
	Motor efficiency at full load:	92.5 %
	Enclosure class (IEC 34-5):	IP55
	Insulation class (IEC 85):	F
	Motor No:	98971052
	Controls:	
	Frequency converter:	Built-in
	Pressure sensor:	N
	Others:	
	Minimum efficiency index, MEI ≥:	0.70
	DOE Pump Energy Index CL:	0.00
	DOE Pump Energy Index VL:	0.00
	Net weight:	105 kg
	Gross weight:	138 kg
	Shipping volume:	0.495 m³
	Danish VVS No.:	386007001
	Finnish LVI No.:	4925714
	Country of origin:	DK
	Custom tariff no.:	84137075

99072011 CRE 45-1 A-F-A-E-HQQE

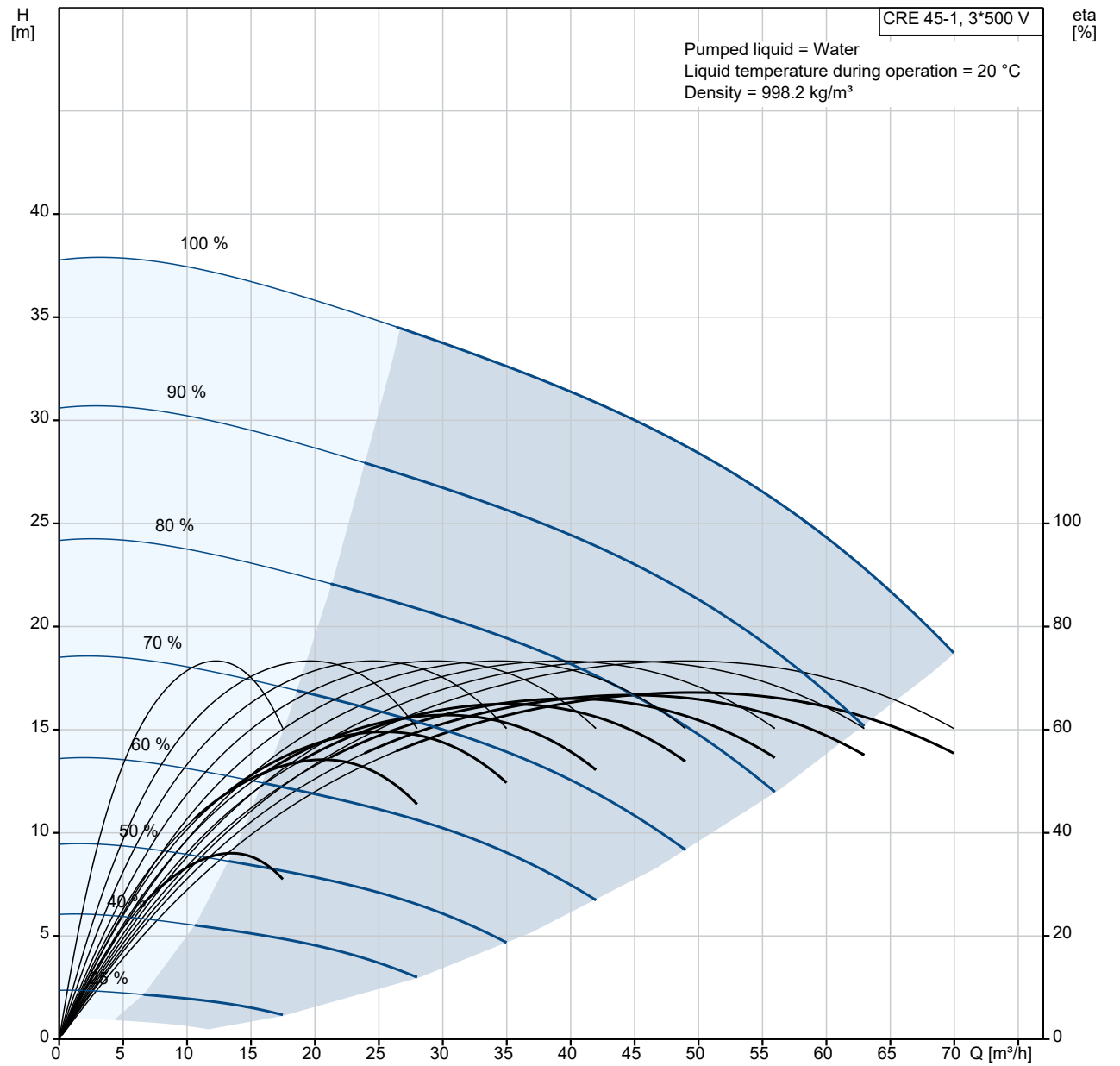

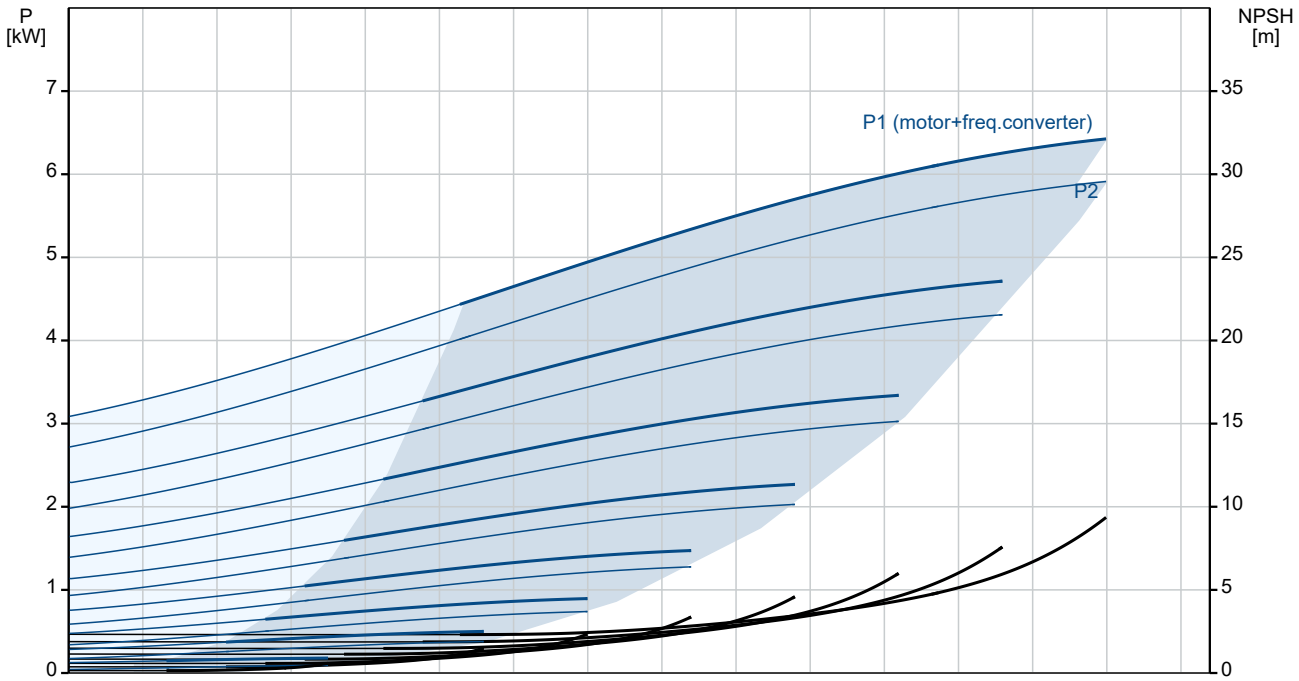

Description	Value
General information:	
Product name:	CRE 45-1 A-F-A-E-HQQE
Product No:	99072011
EAN number:	5712606202584
Technical:	
Pump speed on which pump data are based:	3525 rpm
Rated flow:	54 m³/h
Rated head:	28.1 m
Maximum head:	38.6 m
Stages:	1
Impellers:	1
Number of reduced-diameter impellers:	0
Low NPSH:	N
Pump orientation:	Vertical
Shaft seal arrangement:	Single
Code for shaft seal:	HQQE
Approvals on nameplate:	CE,EAC,UKCA,WRAS,ACS
Curve tolerance:	ISO9906:2012 3B
Pump version:	A
Model:	B
Materials:	
Base:	Cast iron
Base:	EN 1563 EN-GJS-500-7
Base:	ASTM A536 80-55-06
Impeller:	Stainless steel
Impeller:	EN 1.4301
Impeller:	AISI 304
Material code:	A
Code for rubber:	E
Bearing:	SIC
Support bearing:	Graflon
Installation:	
Maximum ambient temperature:	50 °C
Maximum operating pressure:	16 bar
Max pressure at stated temp:	16 bar / 120 °C
Max pressure at stated temp:	16 bar / -30 °C
Type of connection:	DIN
Size of inlet connection:	DN 80
Size of outlet connection:	DN 80
Pressure rating for connection:	PN 40
Flange size for motor:	FF265
Connect code:	F
Liquid:	
Pumped liquid:	Water
Liquid temperature range:	-30 .. 120 °C
Selected liquid temperature:	20 °C
Density:	998.2 kg/m³
Electrical data:	
Motor standard:	IEC
Motor type:	132SF
IE Efficiency class:	IE5
Rated power - P2:	7.5 kW
Power (P2) required by pump:	7.5 kW
Mains frequency:	50 / 60 Hz
Rated voltage:	3 x 380-500 V
Rated current:	14.1-11.2 A
Cos phi - power factor:	0.93-0.89
Rated speed:	360-4000 rpm
Efficiency:	92.5%
Motor efficiency at full load:	92.5 %
Enclosure class (IEC 34-5):	IP55
Insulation class (IEC 85):	F

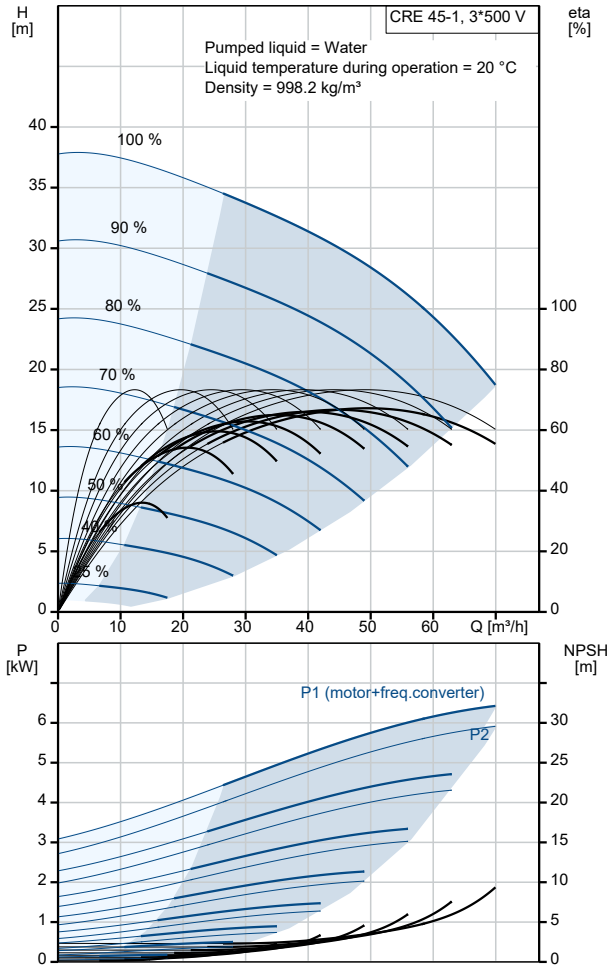

Description	Value
Motor protec:	ELEC
Motor No:	98971052
Controls:	
Control panel:	Standard
Function Module:	FM300 - Advanced
Frequency converter:	Built-in
Pressure sensor:	N
Others:	
Minimum efficiency index, MEI ≥:	0.70
DOE Pump Energy Index CL:	0.00
DOE Pump Energy Index VL:	0.00
Net weight:	105 kg
Gross weight:	138 kg
Shipping volume:	0.495 m^3
Config. file no:	99059348
Danish VVS No.:	386007001
Finnish LVI No.:	4925714
Country of origin:	DK
Custom tariff no.:	84137075

99072011 CRE 45-1 A-F-A-E-HQQE

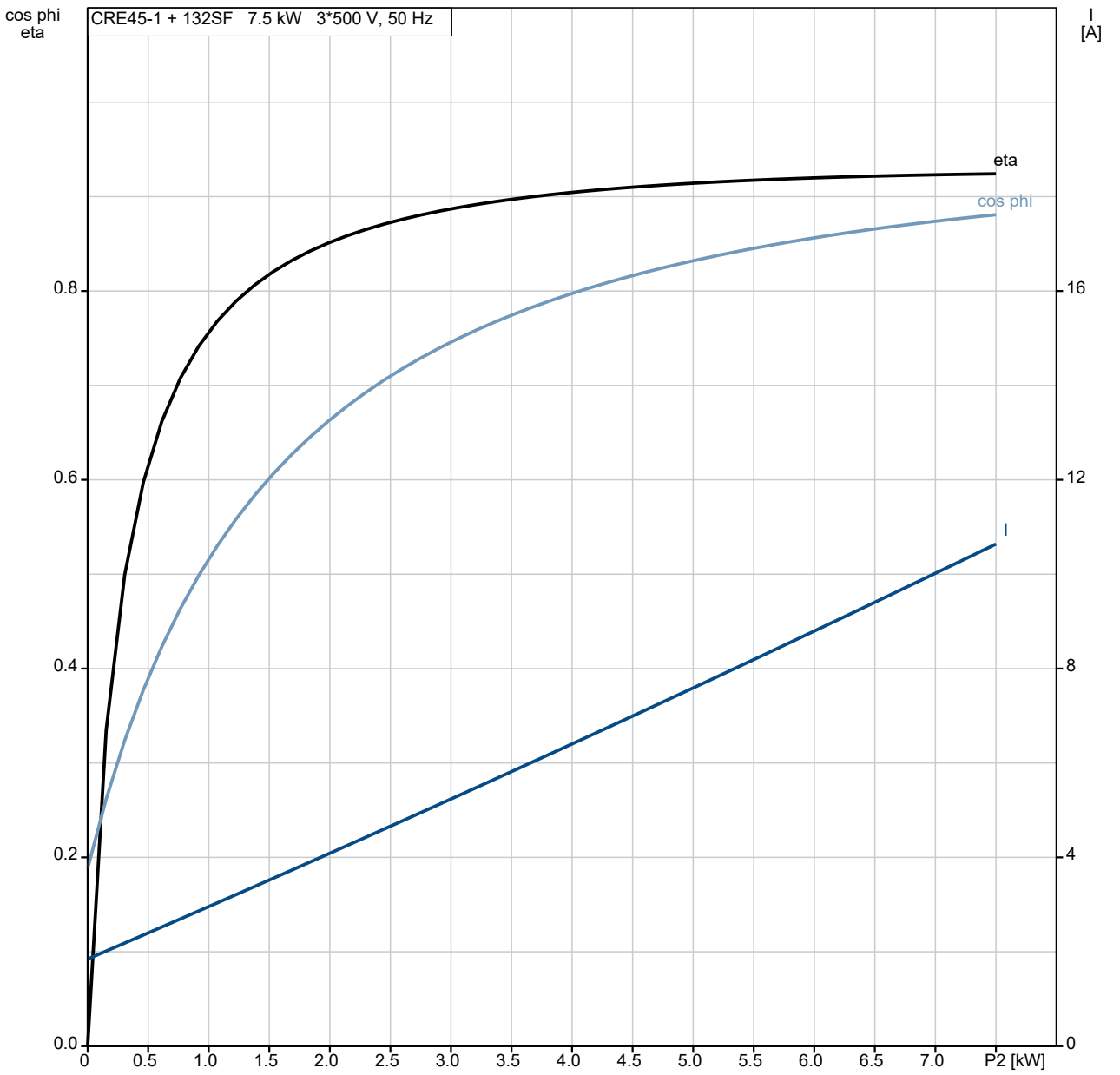

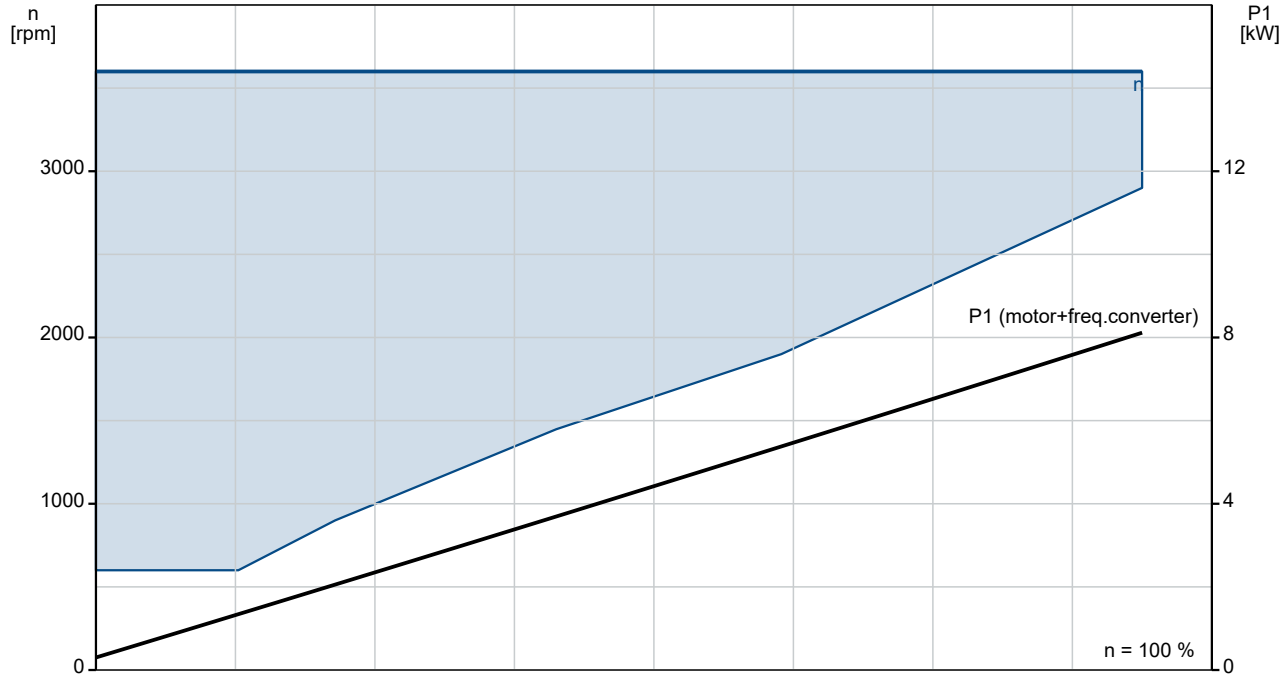

99072011 CRE 45-1 A-F-A-E-HQQE

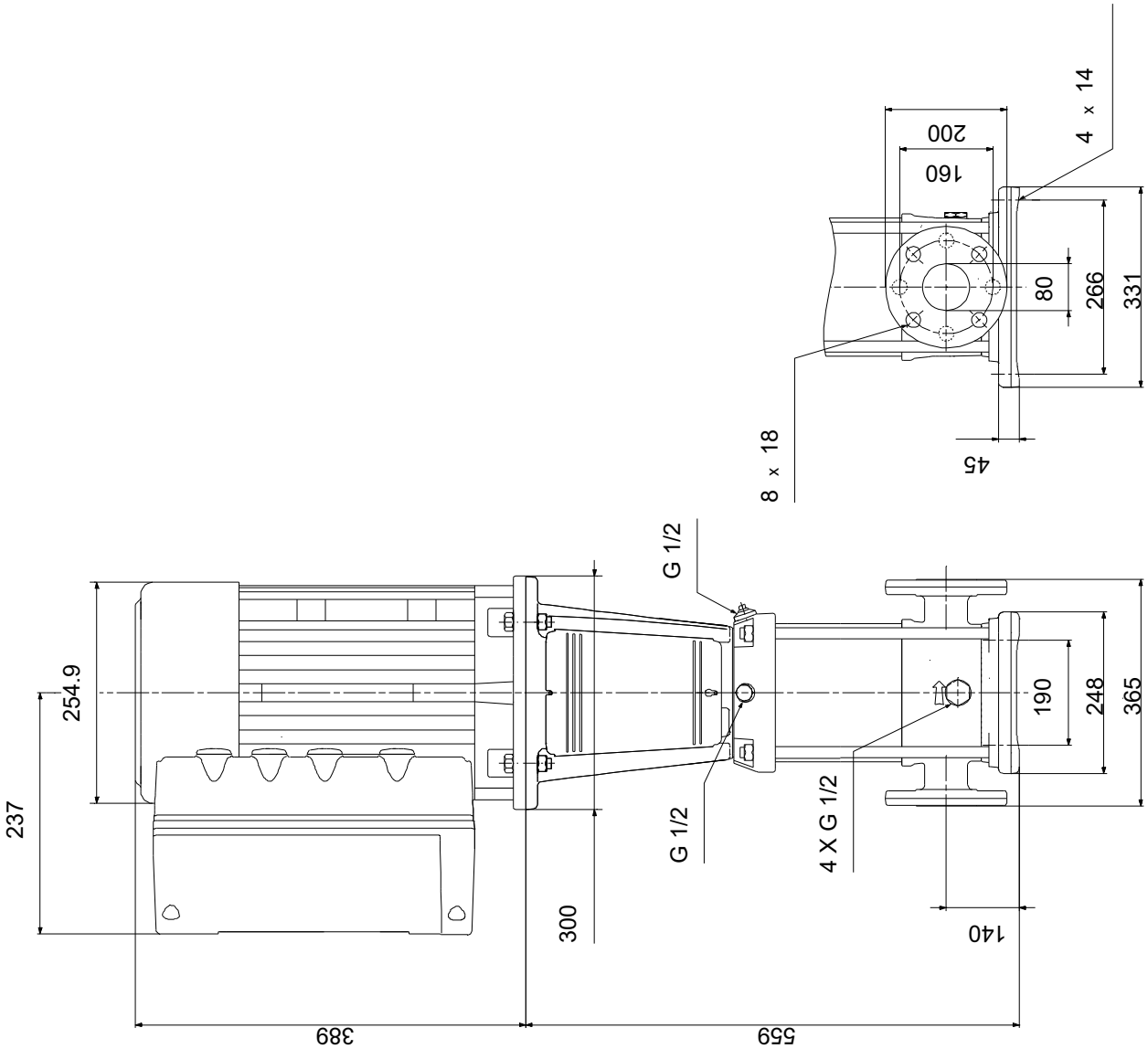

Note! All units are in [mm] unless others are stated.
Disclaimer: This simplified dimensional drawing does not show all details.

Spare parts CRE 45-1, Product No. 99072011
Produced After 1633 (production year and week number)

	Pos	Omschrijving	Opmerking tekst	Classificatie Gegevens	Onderdeelnr.	Aantal	Eenheid
-		Base			96587694	1	pcs
	6	Base				1	
-		Kit, chamber stack			96416223	1	pcs
-	80	Chamber stack				1	
-	3	Upper chamber cpl.					1
		Guide cup					
		Guide cup					
		Cone					
		Guide vane					
		Chamber					
		Chamber					
	47	Bearing					
	26c	Washer		Designation: DIN 125A			2
				Thickness: 1,6			
	26b	Hex socket head cap screw					2
-	26a	Strap cpl.		Length (mm): 89			2
				Thread: M8			
		Strip					
		Nut					
-	44	Suction interconnector cpl.					1
		Suction interconnector					
	45	Seal ring					
	46	Neck ring					
	65	Top f/neck ring					
-	47a	Bearing cpl.					1
		Driver					
		Holder					
		Disc spring					
		Bearing ring					
	47f	Hairpin clip					
-	49e	Impeller cpl.					1
	48	Nut					
	49b	Split cone					
-	49	Impeller					
		Impeller hub					
	49c	Wear ring					
	51	Shaft					1
-		Kit, chambers			98633982	1	pcs
-	3	Upper chamber cpl.				1	
		Guide cup					1
		Guide cup					1
		Cone					1
		Guide vane					10
		Chamber					1
		Chamber					1
	47	Bearing					1
-	47a	Bearing cpl.				1	
		Driver					1
		Holder					1
		Disc spring					1
		Bearing ring					1
	47f	Hairpin clip					1
-		Kit, coupling			96416591	1	pcs
		Adjusting fork				1	
	9	Hex socket head cap screw		Designation: DIN 912		4	
				Length (mm): 25			
				Thread: M10			
	10a	Coupling		Type: SPACER		1	
-		Kit, coupling guard			96505134	1	pcs

Pos	Omschrijving	Opmerking tekst	Classificatie Gegevens	Onderdeelnr.	Aantal	Eenheid
7a	Socket button head screw				4	
7	Coupling guard				2	
-	Kit, cover			98832448	1	pcs
58a	Hex socket head cap screw		Designation: DIN 912		4	
			Length (mm): 25			
			Thread: M10			
58	Cover				1	
-	Kit, gaskets			96416599	1	pcs
	Adjusting fork				1	
37	O-ring				2	
38	O-ring				2	
38	O-ring				4	
60	Spring				4	
109	O-ring				1	
110	O-ring		Diameter: 21,2		1	
			Material type: EPDM			
			Thickness: 3,55			
-	Kit, impeller			98497488	1	pcs
48	Nut				1	
48	Nut				1	
49b	Split cone				1	
- 49	Impeller				1	
	Impeller hub					1
49c	Wear ring					1
-	Kit, plug			96505136	1	pcs
- 18	Air vent screw				1	
	Spindle					1
	Plug					1
25	Plug				4	
25	Plug				1	
38	O-ring				2	
38	O-ring				4	
38	O-ring		Diameter: 16,3		2	
			Material type: FKM			
			Thickness: 2,4			
38	O-ring		Diameter: 16,3		4	
			Material type: FKM			
			Thickness: 2,4			
38	O-ring		Diameter: 16,3		6	
			Material type: FKM			
			Thickness: 2,4			
-	Kit, shaft seal HQQE			96525458	1	pcs
	Grinding device				1	
- 105	Shaft seal		Material type: HQQE		1	
	Adjusting fork					1
109	O-ring					1
110	O-ring		Diameter: 21,5			1
			Material type: EPDM			
			Thickness: 4,25			
-	Kit, wear parts			98497473	1	pcs
45	Seal ring				2	
47d	Lock ring				2	
47c	Bush				1	
49c	Wear ring				2	
65	Top f/neck ring				2	
-	Motor				1	pcs
-	Kit, Blanking plug			99052476	1	
252b	Blind plug					1
252b	Plug cpl.					5
-	Kit, cable gland			98736115	1	
293	Cable glands set					1
-	Kit, connector plugs			98403113	1	
266	Connector plug 10-pole					1
266	Connector plug 2-pole					1

Pos	Omschrijving	Opmerking tekst	Classificatie Gegevens	Onderdeelnr.	Aantal	Eenheid
266	Connector plug 8-pole				1	
266	Connector plug 8-pole				1	
266	Connector plug 8-pole				1	
266	Connector plug 3-pole				1	
266	Connector plug 3-pole				1	
266	Connector plug 3-pole				1	
-	Kit, control box			98878613	1	
251d	Pan head thread forming screw				4	
251b	Control box				1	
251a	Control box cpl.				1	
252b	Blind plug				1	
252b	Plug cpl.				5	
266	Connector plug 10-pole				1	
266	Connector plug 8-pole				1	
266	Connector plug 8-pole				1	
266	Connector plug 8-pole				1	
266	Connector plug 3-pole				1	
266	Connector plug 3-pole				1	
266	Connector plug 3-pole				1	
268a	Base				2	
268	Pan head screw				2	
273b	Battery				1	
273a	Cross recess Pan head screw				4	
273	Funct. Module cpl.				1	
275a	Pin				1	
277b	Spring				4	
277a	Cross recess Pan head screw				1	
277	Cover				1	
286	Spacer				1	
287	Cover				1	
288b	Retaining ring				8	
288a	Pan head thread forming screw				8	
288	Wire clamp				4	
289a	Pan head thread forming screw				1	
289	Wire clamp				1	
290	Control panel, cpl.				1	
301	Jumper				1	
-	Kit, Control box upper			98869869	1	
251d	Pan head thread forming screw				4	
251b	Control box				1	
-	Kit, Control panel			98939973	1	
290	Control panel, cpl.				1	
-	Kit, cover			98330622	1	
287	Cover				1	
-	Kit, end shield (NDE)			98869885	1	
150b	O-ring				1	
156c	Seal ring				1	
156.a	End shield NDE				1	
157	O-ring		Diameter: 62 Material type: NBR Thickness: 3		1	
158	Waved washer				1	
206	Pan head thread forming screw				4	
206	Hex socket head cap screw				4	
207b	Nut				4	
-	Kit, fan			98869879	1	
152	Pan head thread forming screw				4	
156c	Seal ring				1	
156	Fan				1	
-	Kit, fan cover			99957566	1	
151	Fan cover				1	
152	Pan head thread forming screw				4	
-	Kit, flange (DE)			98869905	1	

Pos	Omschrijving	Opmerking tekst	Classificatie Gegevens	Onderdeelnr.	Aantal	Eenheid
	Glue					0
150b	O-ring					1
155a	Bearing cover					1
156c	Seal ring					1
156b	Flange					1
185	Hex socket head cap screw					4
201c	Drain plug					4
208b	Nut					4
208a	Gasket					3
208	Hex socket head cap screw		Designation: DIN912			3
			Length (mm): 40			
			Thread: M5			
-	Kit, Funct. module			98334777	1	
273a	Cross recess Pan head screw					5
273	Funct. Module cpl.					1
275a	Pin					1
286	Spacer					1
-	Kit, Isolation cover			98859523	1	
277b	Spring					4
277a	Cross recess Pan head screw					1
277	Cover					1
-	Kit, Lower part cpl.			98859573	1	
178	Pan head thread forming screw					4
251a	Control box cpl.					1
275a	Pin					1
277a	Cross recess Pan head screw					1
277	Cover					1
-	Kit, motor			99010792	1	
	Hex socket head cap screw					2
	Glue					0
	Terminal					6
66a	Washer					2
111	Ball bearing		Designation: 6206.2Z.C3.SYN			1
118a	Hex socket head cap screw					4
150b	O-ring					2
150	Stator w/housing					1
151	Fan cover					1
152	Pan head thread forming screw					4
153	Angular-contact bearing					1
155a	Bearing cover					1
156d	Gasket					1
156c	Seal ring					1
156c	Seal ring					1
156b	Flange					1
156.a	End shield NDE					1
156	Fan					1
157	O-ring		Diameter: 62			1
			Material type: NBR			
			Thickness: 3			
158	Waved washer					2
172	Shaft w/rotor					1
185	Hex socket head cap screw					4
186	Drain plug					4
187	Retaining ring					1
203	Terminal plug					1
208b	Nut					4
208b	Nut					4
208a	Gasket					3
208	Hex socket head cap screw		Designation: DIN912			3
			Length (mm): 40			
			Thread: M5			
289a	Pan head thread forming screw					2
-	Kit, plug			99028677	1	

	Pos	Omschrijving	Opmerking tekst	Classificatie Gegevens	Onderdeelnr.	Aantal	Eenheid
	152	Pan head thread forming screw				2	
	203	Terminal plug				1	
	205	Gasket				1	
-		Kit, screws			99028725	1	
	268a	Base				2	
	268	Pan head screw				2	
	288b	Retaining ring				8	
	288a	Pan head thread forming screw				8	
	288	Wire clamp				4	
	289a	Pan head thread forming screw				1	
	289	Wire clamp				1	
-		Kit, staybolts			98881543	1	
	181	Pan head staybolt				4	
		Lifting device			99140040	2	
	111	Ball bearing		Designation: 6206.2Z.C3.SYN	99078033	1	
	111	Ball bearing		Designation: 6206.2Z.C3.SYN	97501070	1	
	152	Pan head thread forming screw			99834207	4	
	152	Pan head thread forming screw			99814578	4	
	153	Angular-contact bearing			98412045	1	
	153	Angular-contact bearing			98576644	1	
	186	Drain plug			99980519	4	
	251d	Pan head thread forming screw			98995460	4	
	266	Connector plug 3-pole			99421265	1	
	1a	Motor stool			96547431	1	pcs
	2	Pump head			96547433	1	pcs
-	3	Upper chamber cpl.			99262935	1	pcs
	47	Bearing			99964632	1	
	47	Bearing			99928986	1	
-	4a	Intermediate chamber cpl.			99262867	1	pcs
	45a	Neck ring cpl.			98763585	1	
	45a	Neck ring cpl.			96547397	1	
+	4a	Intermediate chamber cpl.			99139113	1	pcs
	7a	Socket button head screw			96549696	4	pcs
	7	Coupling guard			96603300	2	pcs
+	8	Coupling cpl.		Dimension: 22/38	96587705	1	pcs
	9	Hex socket head cap screw		Designation: DIN 912	99789390	4	pcs
				Length (mm): 25			
				Thread: M10			
+	18	Air vent screw			96547461	1	pcs
+	18	Air vent screw			95061351	1	pcs
	25	Plug			96536013	1	pcs
	26c	Washer		Designation: DIN 125A	99262704	2	pcs
				Thickness: 1,6			
	26c	Washer		Designation: DIN 125A	99886930	2	pcs
				Thickness: 1,6			
	26b	Hex socket head cap screw			98931380	2	pcs
+	26a	Strap cpl.		Length (mm): 89	98983868	2	pcs
				Thread: M8			
	26	Staybolt		Length (mm): 250	98976735	4	pcs
				Thread: M16			
	28	Hex socket head cap screw		Designation: DIN 912	96536147	4	pcs
				Length (mm): 50			
				Thread: M10			
	28	Hex head screw		Length (mm): 45 MM	96620474	4	pcs
				Thread: M12			
	32	Washer		Designation: DIN 125 A	99883474	8	pcs
				Internal diameter: 13			
				Outer diameter: 24			
				Thickness: 2,5			
	32	Washer		Designation: DIN 125 A	98923051	4	pcs
				Internal diameter: 17			
				Outer diameter: 30			
				Thickness: 3			

	Pos	Omschrijving	Opmerking tekst	Classificatie Gegevens	Onderdeelnr.	Aantal	Eenheid
	36	Hex nut		Thread: M16	96620480	4	pcs
	36	Nut		Thread: M12	96620479	4	pcs
	37	O-ring			96536142	1	pcs
	38	O-ring			99198815	2	pcs
	38	O-ring			99412727	2	pcs
-	44	Suction interconnector cpl.			98634054	1	pcs
	45	Seal ring			97911448	1	
	45	Seal ring			96535952	1	
	65	Top f/neck ring			96547390	1	
-	47a	Bearing cpl.			99270651	1	pcs
	47f	Hairpin clip			99908983	1	
	49b	Split cone			96536010	1	pcs
-	49	Impeller			96535946	1	pcs
	49c	Wear ring			96535949	1	
	51	Shaft			98506302	1	pcs
	55	Outer sleeve		Outer diameter: 216	98820219	1	pcs
				Length (mm): 103,5			
	58	Cover			98893158	1	pcs
	60	Spring			96536032	4	pcs
-	105	Shaft seal		Material type: HQQE	96984086	1	pcs
		Adjusting fork			96587896	1	
	109	O-ring			99651108	1	
	109	O-ring			96547586	1	
+	105	Shaft seal		Material type: HQQE	96984070	1	pcs
	440b	Lock ring			96535943	1	pcs