Inventflow: Grundfos A-partner

Grundfos NKE 40-160/158 A2F2AE-SBQQE

Find the pump here:
https://inventflow.nl/en/pompenfilter/nke/grundfos-nke-40-160-158-a2f2ae-sbqqe

Contact

info@inventflow.nl
+31 (0) 546 45 80 72

Datasheet

Qty.	Description
1	**NKE 40-160/158 A2F2AE-SBQQE**

Note! Product picture may differ from actual product

Product No.: 99105899

Non-self priming, single-stage centrifugal
Flange standard: pump according to EN 1092-2.

The pump is for the pumping of thin, clean or
slightly contaminated
liquids without abrasive or long-fibred
solids.

Phase: Pump and 3-phase AC motor are mounted
as separate units on a common baseplate and

The impeller is hydraulically as well as
dynamically balanced.

The pump has the following characteristics:
- flange dimensions according to
EN 1092-2,

Pump housing: - Cast iron volute
pump housing,
- stainless steel shaft

Impeller: and Cast iron impeller,
- unbalanced mechanical shaft seal
according to EN 12756.

The pump is fitted with an IEC-flanged three-phase
MGE motor with frequency converter and
PI-controller integrated in the motor terminal box.
No additional motor protection is required as both
motor and electronics are protected by integrated
overload and temperature protection.

An external sensor can be connected if controlled
pump operation based on for example flow,
differential pressure or temperature is required.

A control panel enables setting of required
setpoint as well as setting of pump to MIN or MAX
operation or to STOP. The control panel has
indicator lights for "Operation" and "Fault".

Communication with the pump is possible by means
of Grundfos R100 Remote Control enabling further
settings as well as reading out of a number of
parameters such as "Actual value", "Speed",
"Power input" and total "Power consumption".

The terminal box holds terminals for the
connection of:
- pump start/stop (potential-free contact),
- external remote setpoint setting via analog
signal, 0 - 5 V, 0 - 10 V, 0(4) - 20 mA,
- 5 V voltage supply for setpoint potentiometer,

Qty.	Description

Imax = 5 mA,
- sensor, 0 - 5 V, 0 - 10 V, 0(4) - 20 mA,
- 24 V voltage supply for sensor, Imax = 40 mA,
- input for forced control to MIN or MAX (potential-free contact),
- potential-free fault signal relay with changeover contact,
- RS485 GENIbus.

Controls:

Frequency converter:	Built-in
Pressure sensor:	N

Liquid:

Pumped liquid:	Water
Liquid temperature range:	-25 .. 120 °C
Selected liquid temperature:	20 °C
Density:	998.2 kg/m³

Technical:

Pump speed on which pump data are based:	2901 rpm
Rated flow:	44.02 m³/h
Pump with motor:	Y
Rated head:	29.12 m
Actual impeller diameter:	158 mm
Nominal impeller diameter:	160
Code for shaft seal:	BQQE
Curve tolerance:	ISO9906:2012 3B2
Bearing design:	Standard

Materials:

Pump housing:	Cast iron EN-GJL-250 ASTM class 35
Wear ring:	Brass
Impeller:	Cast iron EN-GJL-200 ASTM class 30
Shaft:	Stainless steel EN 1.4301 AISI 304
Internal pump house coating:	CED

Installation:

Maximum ambient temperature:	50 °C
Maximum operating pressure:	16 bar
Pipe connection standard:	EN 1092-2
Type of inlet connection:	DIN
Type of outlet connection:	DIN
Size of inlet connection:	DN 65
Size of outlet connection:	DN 40
Pressure rating for connection:	PN 16
Coupling type:	Flexible w/spacer
Base frame design:	EN/ISO
Grouting:	N

Electrical data:

Motor type:	132SE
IE Efficiency class:	IE5
Rated power - P2:	5.5 kW
Mains frequency:	50 Hz
Rated voltage:	3 x 380-500 V
Rated current:	10.3-8.20 A
Cos phi - power factor:	0.92-0.88
Rated speed:	360-4000 rpm

Qty.	Description
	Efficiency: 92.7% Motor efficiency at full load: 92.7 % Number of poles: 2 Enclosure class (IEC 34-5): IP55 Insulation class (IEC 85): F Motor No: 99306755 Others: Minimum efficiency index, MEI ≥: 0.70 Net weight: 144 kg Gross weight: 164 kg Shipping volume: 0.392 m³ Country of origin: HU Custom tariff no.: 84137059

99105899 NKE 40-160/158 A2F2AE-SBQQE 50 Hz

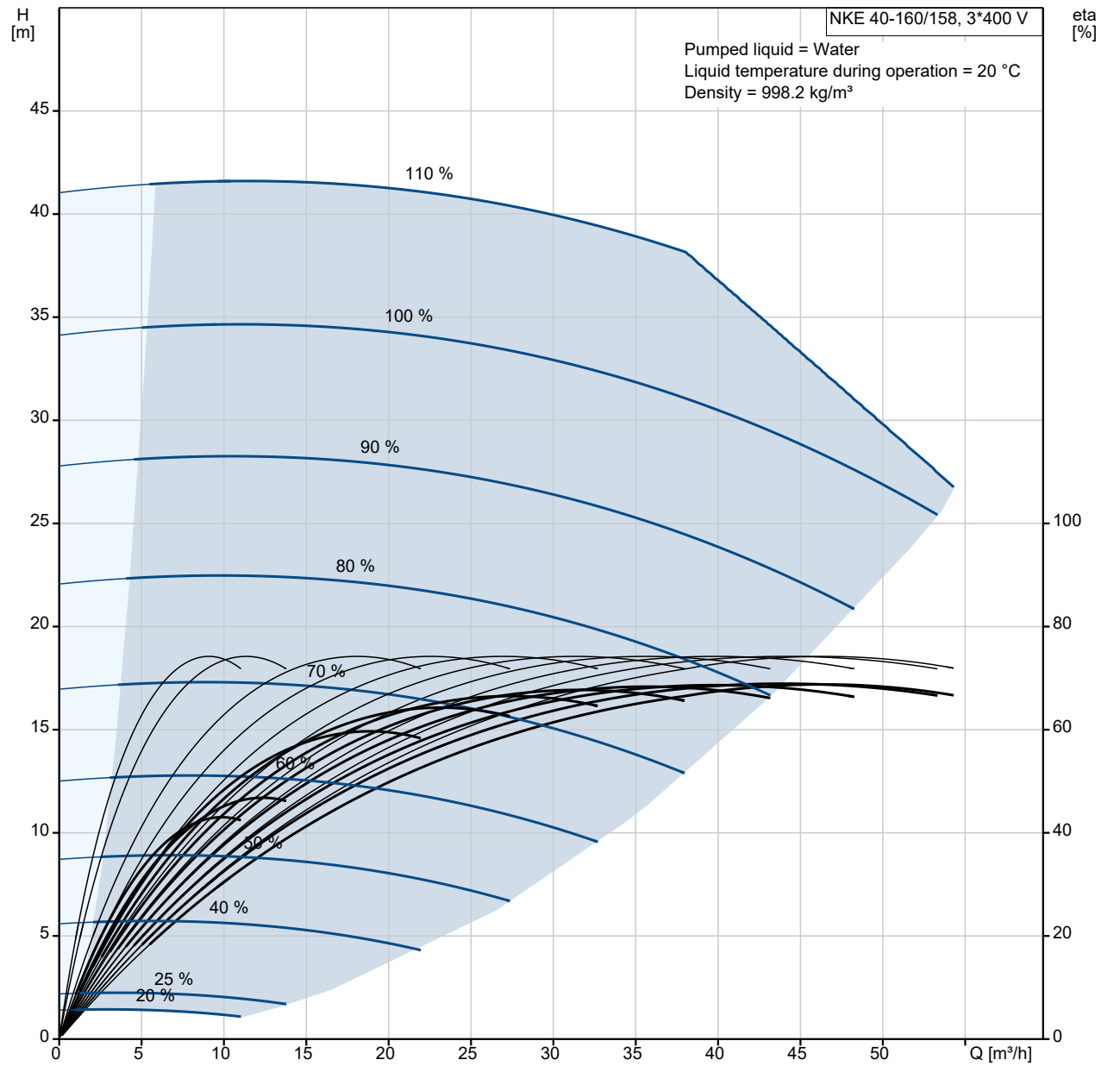

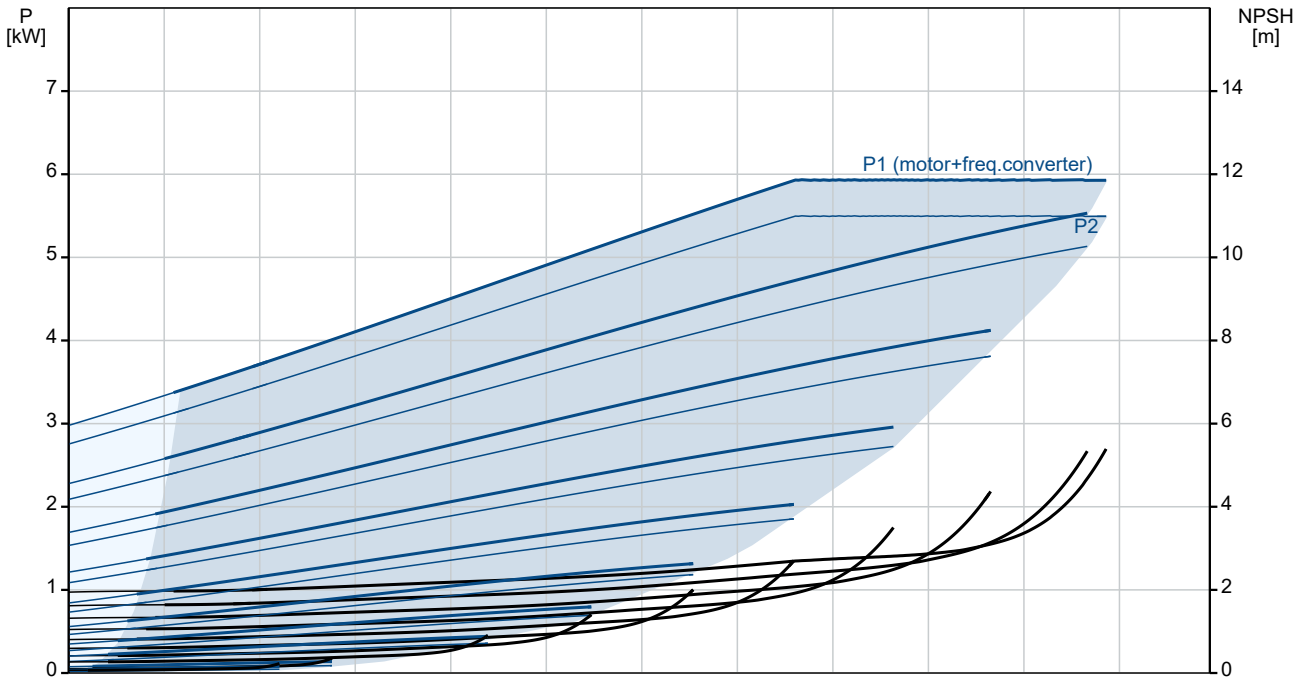

Description	Value
General information:	
Product name:	NKE 40-160/158 A2F2AE-SBQQE
Product No:	99105899
EAN number:	5712606861842
Technical:	
Pump speed on which pump data are based:	2901 rpm
Rated flow:	44.02 m³/h
Pump with motor:	Y
Rated head:	29.12 m
Actual impeller diameter:	158 mm
Nominal impeller diameter:	160
Shaft diameter:	24 mm
Code for shaft seal:	BQQE
Curve tolerance:	ISO9906:2012 3B2
Pump version:	A2
Bearing design:	Standard
Materials:	
Pump housing:	Cast iron
Pump housing:	EN-GJL-250
Pump housing:	ASTM class 35
Wear ring:	Brass
Impeller:	Cast iron
Impeller:	EN-GJL-200
Impeller:	ASTM class 30
Shaft:	Stainless steel
Shaft:	EN 1.4301
Shaft:	AISI 304
Internal pump house coating:	CED
Material code:	A
Code for rubber:	E
Installation:	
Maximum ambient temperature:	50 °C
Maximum operating pressure:	16 bar
Pipe connection standard:	EN 1092-2
Type of inlet connection:	DIN
Type of outlet connection:	DIN
Size of inlet connection:	DN 65
Size of outlet connection:	DN 40
Pressure rating for connection:	PN 16
Coupling type:	Flexible w/spacer
Base frame design:	EN/ISO
Grouting:	N
Connect code:	F
Liquid:	
Pumped liquid:	Water
Liquid temperature range:	-25 .. 120 °C
Selected liquid temperature:	20 °C
Density:	998.2 kg/m³
Electrical data:	
Motor type:	132SE
IE Efficiency class:	IE5
Rated power - P2:	5.5 kW
Mains frequency:	50 Hz
Rated voltage:	3 x 380-500 V
Rated current:	10.3-8.20 A
Cos phi - power factor:	0.92-0.88
Rated speed:	360-4000 rpm
Efficiency:	92.7%
Motor efficiency at full load:	92.7 %
Number of poles:	2
Enclosure class (IEC 34-5):	IP55
Insulation class (IEC 85):	F

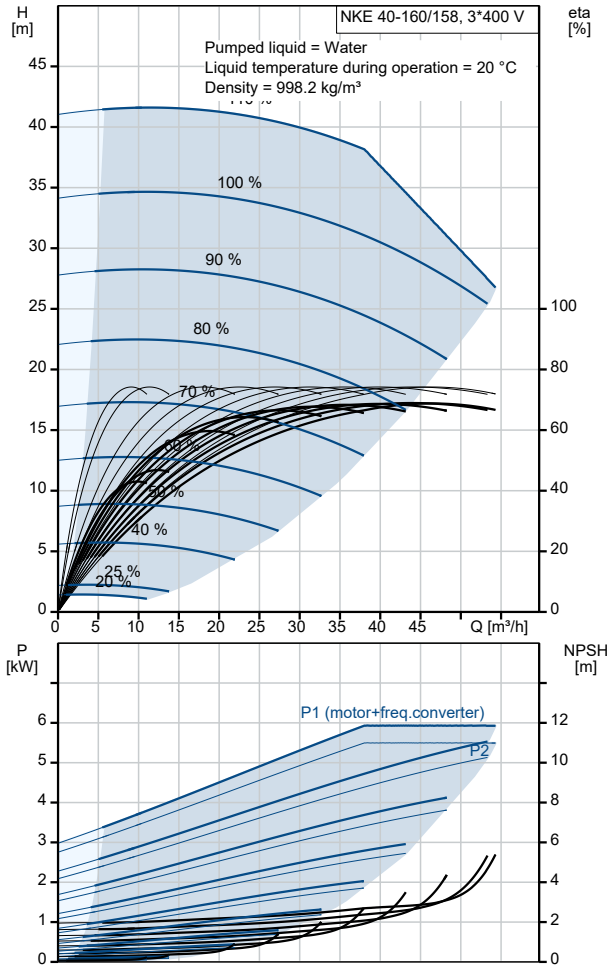

Description	Value
Motor protec:	ELEC
Motor No:	99306755
Controls:	
Control panel:	HMI300 - Advanced
Function Module:	FM300 - Advanced
Frequency converter:	Built-in
Pressure sensor:	N
Others:	
Minimum efficiency index, MEI ≥:	0.70
Net weight:	144 kg
Gross weight:	164 kg
Shipping volume:	0.392 m^3
Country of origin:	HU
Custom tariff no.:	84137059

99105899 NKE 40-160/158 A2F2AE-SBQQE 50 Hz

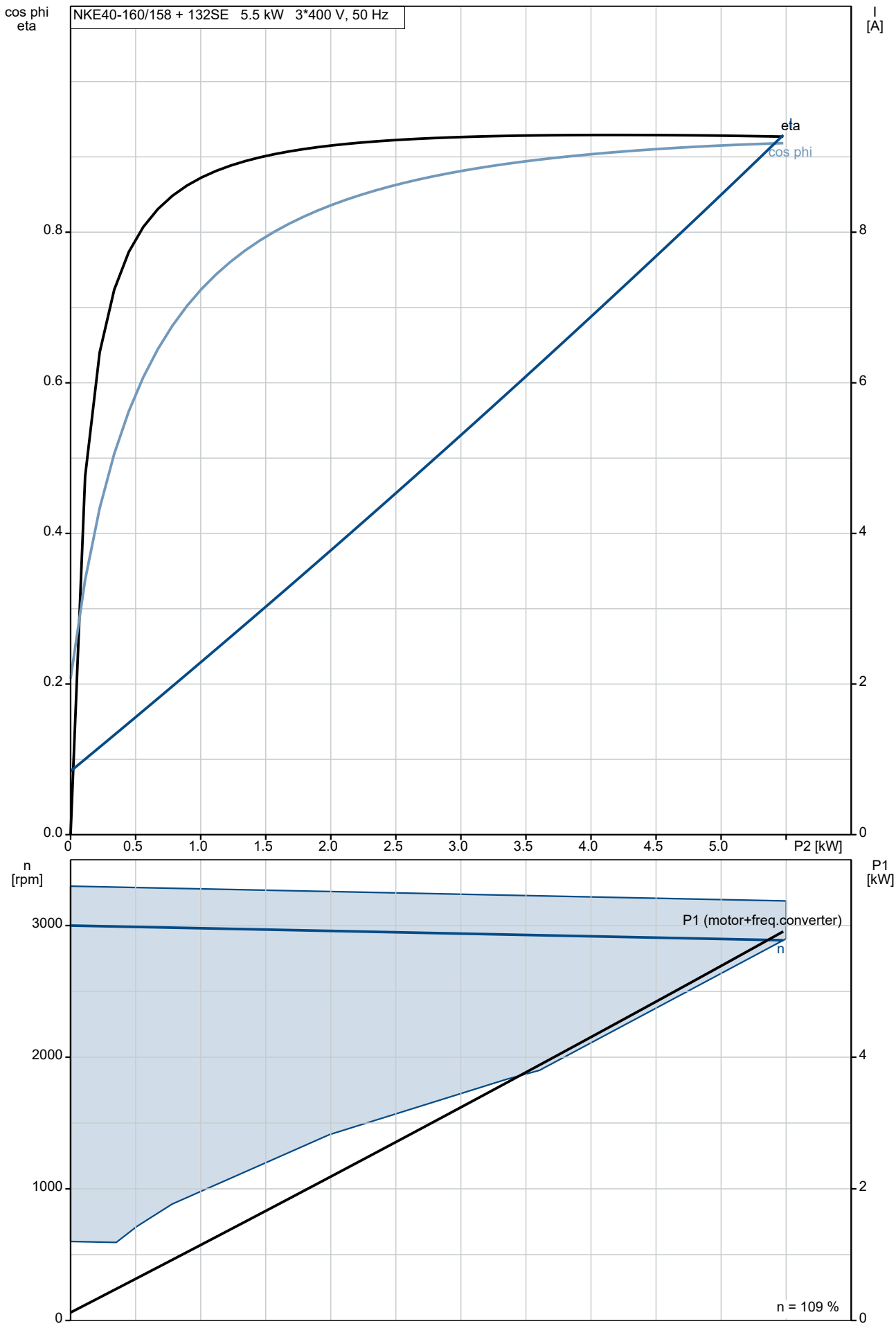

99105899 NKE 40-160/158 A2F2AE-SBQQE 50 Hz

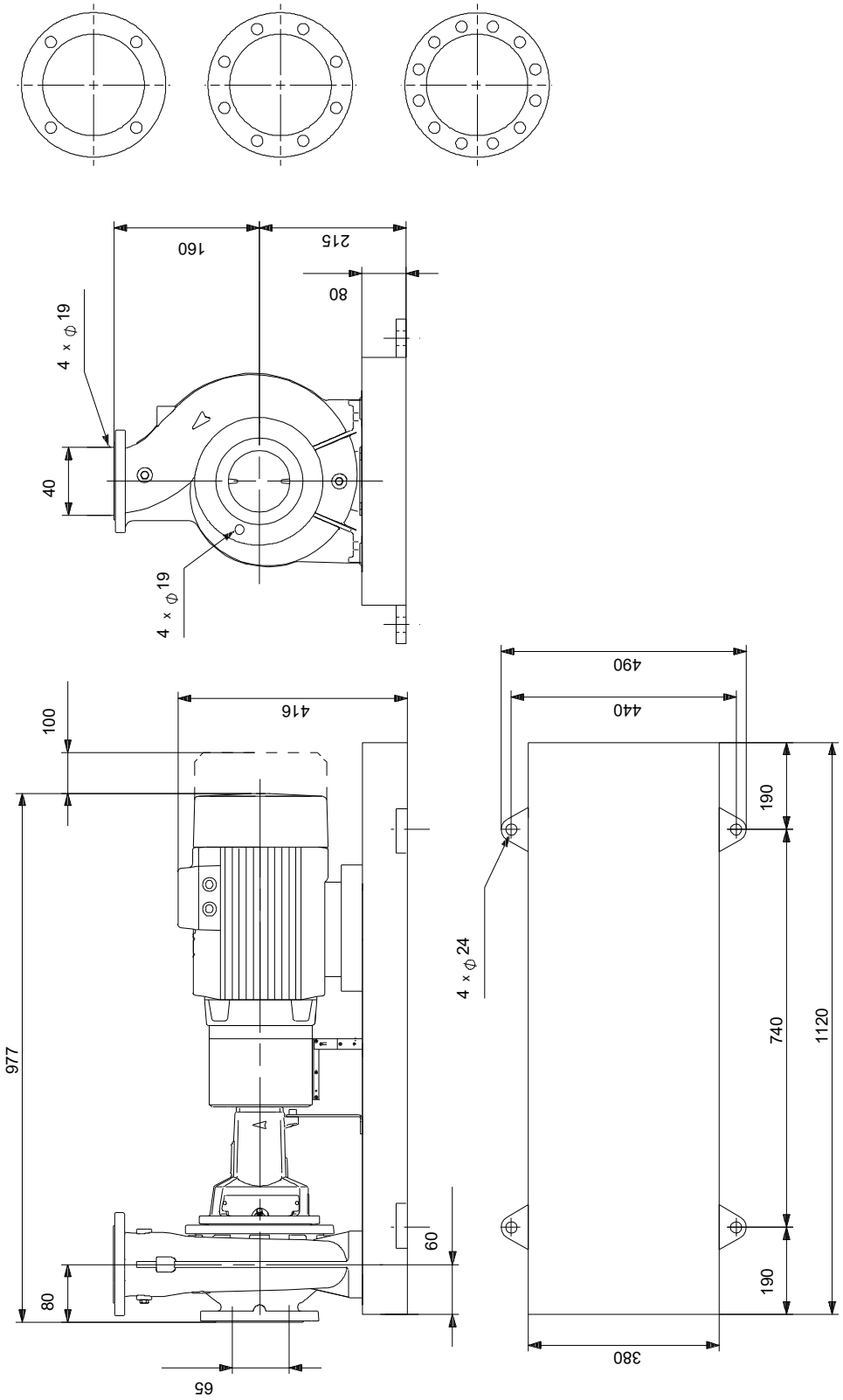

Note! All units are in [mm] unless others are stated.
Disclaimer: This simplified dimensional drawing does not show all details.

Spare parts NKE 40-160/158, Product No. 99105899
Produced After 1828 (production year and week number)

Pos	Omschrijving	Opmerking tekst	Classificatie Gegevens	Onderdeelnr.	Aantal	Eenheid
-	Kit, bearing			96579598	1	pcs
53a	O-ring		Diameter: 71,5		1	
			Material type: EPDM			
			Thickness: 3			
53	Ball bearing				1	
54a	O-ring		Diameter: 71,5		1	
			Material type: EPDM			
			Thickness: 3			
54	Ball bearing				1	
156a	Bearing cover				2	
159f	Retaining ring				2	
159a	V-ring				2	
-	Kit, bearing bracket			95131793	1	pcs
7.k	Hex socket head cap screw		Length (mm): 10		4	
			Thread: M6			
36.a	Nut		Thread: M10		6	
76a	Rivet				2	
86	Bearing bracket				1	
124d	Shaft guard				1	
124d	Shaft guard				1	
124.d	Pan head screw				4	
-	Kit, coupling			96579726	1	pcs
- 8	Coupling cpl.				1	
89s	Spacer ring					1
89r	Spacer sleeve					1
89o	Coupling part spacer side					1
89.p	Coupling female					1
89.d	Hex socket head cap screw		Length (mm): 16			6
			Thread: M6			
89.b	Socket set screw		Length (mm): 8			1
			Thread: M6			
89	Rubber blocks for coupling					6
11.a	Parallel key		Dimension: 8X7X40		1	
-	Kit, coupling guard			97945065	1	pcs
7b	Hex socket head cap screw		Length (mm): 10		4	
			Thread: M6			
7b	Retainer for coupling guard				1	
- 7	Coupling guard cpl.				1	
7e	Hex socket head cap screw					3
7c	Spacer f/coupling guard					1
7	Guard					1
94	Lock nut		Thread: M6			2
-	Kit, cover			95131799	1	pcs
18	Plug				1	
36	Nut		Thread: M10		6	
77	Cover f/mech. seal				1	
-	Kit, foot for bearing bracket			96909145	1	pcs
	Nut		Thread: M12		2	
	Nut		Thread: M12		2	
66	Washer				2	
90.e	Hex head screw		Length (mm): 25		1	
			Thread: M12			
90.d	Hex head bolt		Length (mm): 70		2	
			Thread: M12			
90.d	Hex head screw		Length (mm): 35MM		2	
			Thread: M12			
90.d	Hex head screw		Length (mm): 40		2	
			Thread: M12			

Pos	Omschrijving	Opmerking tekst	Classificatie Gegevens	Onderdeelnr.	Aantal	Eenheid
90.c	Foot				1	
-	Kit, foot for coupling guard			96848540	1	pcs
7h	Hex head screw		Length (mm): 16		2	
			Thread: M8			
- 7.d	Foot cpl.				1	
7d	Foot for coupling guard					1
66	Washer				2	
-	Kit, nut			96939128	1	pcs
11	Parallel key		Dimension: 6X6X35		1	
- 36	Nut				1	
66a	Spring lock washer					1
66	Washer					1
67	Nut		Thread: M14			1
-	Kit, pump housing			95131709	1	pcs
- 6	Pump housing				1	
26	Staybolt		Length (mm): 40			6
			Thread: M10			
45	Wear ring					1
20	Pipe plug		Thread: R 3/8		2	
36	Nut		Thread: M10		6	
-	Kit, rubber blocks f. coupling			96480016	1	pcs
89	Rubber blocks for coupling				6	
-	Kit, shaft			96039654	1	pcs
11.a	Parallel key		Dimension: 8X7X40		1	
11	Parallel key		Dimension: 6X6X35		1	
51	Shaft				1	
66a	Spring lock washer				1	
66	Washer				1	
67	Nut		Thread: M14		1	
-	Kit, shaft cover			96809954	1	pcs
124d	Shaft guard				1	
124d	Shaft guard				1	
124.d	Pan head screw				4	
-	Spare, wear ring			96810100	1	pcs
45	Wear ring				1	
-	Spare, wear ring			96810102	1	pcs
45b	Wear ring				1	
-	V-ring			96591314	1	pcs
159a	V-ring				1	
-	Motor				1	pcs
-	Kit, Ball bearing			98881510	1	
153	Ball bearing		Designation: 6206.2Z.C3.SYN			1
154	Ball bearing					1
156d	Seal ring					1
156c	Seal ring					1
157	O-ring		Diameter: 62			1
			Material type: NBR			
			Thickness: 3			
158	Waved washer					1
187	Retaining ring					1
188	Retaining ring					1
-	Kit, Blanking plug			99052475	1	
252b	Plug cpl.					4
252b	Blanking plug					1
-	Kit, cable gland			98736096	1	
293	Cable glands set					1
-	Kit, connector plugs			98403113	1	
266	Connector plug 10-pole					1
266	Connector plug 2-pole					1
266	Connector plug 8-pole					1
266	Connector plug 8-pole					1
266	Connector plug 8-pole					1

Pos	Omschrijving	Opmerking tekst	Classificatie Gegevens	Onderdeelnr.	Aantal	Eenheid
266	Connector plug 3-pole				1	
266	Connector plug 3-pole				1	
266	Connector plug 3-pole				1	
-	Kit, control box			98878619	1	
251d	Pan head thread forming screw				4	
251b	Control box				1	
251a	Control box cpl.				1	
252b	Plug cpl.				4	
252b	Blanking plug				1	
266	Connector plug 10-pole				1	
266	Connector plug 8-pole				1	
266	Connector plug 8-pole				1	
266	Connector plug 8-pole				1	
266	Connector plug 3-pole				1	
266	Connector plug 3-pole				1	
266	Connector plug 3-pole				1	
268a	Base				1	
268	Pan head screw				1	
273b	Battery				1	
273a	Cross recess Pan head screw				3	
273	Funct. Module cpl.				1	
275a	Pin				1	
277b	Spring				4	
277a	Cross recess Pan head screw				1	
277	Cover				1	
286	Spacer				1	
287	Cover				1	
288b	Retaining ring				8	
288a	Pan head thread forming screw				8	
288	Wire clamp				4	
289a	Pan head thread forming screw				1	
289	Wire clamp				1	
290	Control panel, cpl.				1	
301	Jumper				1	
-	Kit, Control box upper			98869867	1	
251d	Pan head thread forming screw				4	
251b	Control box				1	
-	Kit, Control panel			98939971	1	
290	Control panel, cpl.				1	
-	Kit, cover			98330622	1	
287	Cover				1	
-	Kit, end shield (NDE)			98869883	1	
156c	Seal ring				1	
156a	End shield NDE				1	
157	O-ring		Diameter: 62		1	
			Material type: NBR			
			Thickness: 3			
158	Waved washer				1	
206	Pan head thread forming screw				4	
-	Kit, fan			98869877	1	
152	Pan head thread forming screw				4	
156c	Seal ring				1	
156	Fan				1	
-	Kit, fan cover			99957566	1	
151	Fan cover				1	
152	Pan head thread forming screw				4	
-	Kit, flange (DE)			98869895	1	
	Glue				0	
156c	Seal ring				1	
156b	End shield DE				1	
201c	Drain plug				4	
-	Kit, foot			98962888	1	
152	Pan head thread forming screw				4	
191	Foot				1	

Pos	Omschrijving	Opmerking tekst	Classificatie Gegevens	Onderdeelnr.	Aantal	Eenheid
-	Kit, Funct. module			98334777	1	
273a	Cross recess Pan head screw				5	
273	Funct. Module cpl.				1	
275a	Pin				1	
286	Spacer				1	
-	Kit, Isolation cover			98859508	1	
277b	Spring				4	
277a	Cross recess Pan head screw				1	
277	Cover				1	
-	Kit, Lower part cpl.			98859571	1	
178	Pan head thread forming screw				4	
251a	Control box cpl.				1	
275a	Pin				1	
277a	Cross recess Pan head screw				1	
277	Cover				1	
-	Kit, motor			99010779	1	
	Terminal				3	
111	Ball bearing		Designation: 6206.2Z.C3.SYN		1	
150	Stator w/housing				1	
151	Fan cover				1	
152	Pan head thread forming screw				4	
152	Pan head thread forming screw				2	
152	Pan head thread forming screw				4	
153	Ball bearing				1	
156d	Seal ring				1	
156c	Seal ring				1	
156	Fan				1	
157	O-ring		Diameter: 62		1	
			Material type: NBR			
			Thickness: 3			
158	Waved washer				1	
172a	Parallel key				1	
172	Shaft w/rotor				1	
181	Pan head staybolt				4	
187	Retaining ring				1	
188	Retaining ring				1	
190	Eyebolt				2	
191	Foot				1	
201c	Drain plug				4	
203	Terminal plug				1	
205	Gasket				1	
-	Kit, plug			99028676	1	
152	Pan head thread forming screw				2	
203	Terminal plug				1	
205	Gasket				1	
-	Kit, screws			99028712	1	
268a	Base				1	
268	Pan head screw				1	
288b	Retaining ring				8	
288a	Pan head thread forming screw				8	
288	Wire clamp				4	
289a	Pan head thread forming screw				1	
289	Wire clamp				1	
-	Kit, staybolts			98881543	1	
181	Pan head staybolt				4	
111	Ball bearing		Designation: 6206.2Z.C3.SYN	99078033	1	
111	Ball bearing		Designation: 6206.2Z.C3.SYN	97501070	1	
152	Pan head thread forming screw			99834207	2	
152	Pan head thread forming screw			99814578	2	
153	Ball bearing			98638919	1	
186	Drain plug			99980519	4	
251d	Pan head thread forming screw			98995460	4	

Pos	Omschrijving	Opmerking tekst	Classificatie Gegevens	Onderdeelnr.	Aantal	Eenheid
266	Connector plug 3-pole			99421265	1	
7k	Hex socket head cap screw		Length (mm): 10	97506946	4	pcs
			Thread: M6			
28	Hex head screw		Length (mm): 25	99522923	1	pcs
			Thread: M12			
36	Nut		Thread: M10	96620484	6	pcs
49	Impeller		Outer diameter: 158	98296616	1	pcs
53.b	Spacer ring			96938908	1	pcs
54a	O-ring		Diameter: 71,5	97511807	2	pcs
			Material type: EPDM			
			Thickness: 3			
67	Nut		Thread: M14	92526531	1	pcs
72a	O-ring			92547662	1	pcs
72a	O-ring			92526508	1	pcs
72a	O-ring			97511824	1	pcs
72a	O-ring			99756265	1	pcs
77a	Pan head screw			99266550	4	pcs
156a	Bearing cover			97506936	2	pcs