Inventflow: Grundfos A-partner

Grundfos TPE 65-410/2 S-A-F-A-BQQE-MDB

Find the pump here:
https://inventflow.nl/en/pompenfilter/tpe/grundfos-tpe-65-410-2-s-a-f-a-bqqe-mdb

Contact

info@inventflow.nl
+31 (0) 546 45 80 72

Datasheet

Qty.	Description
1	**TPE 65-410/2 S-A-F-A-BQQE-MDB**

Note! Product picture may differ from actual product

Product No.: 99114672
Single-stage, centrifugal volute in-line, single-head pump.

The in-line design with opposite suction and discharge ports enables mounting in pipework or on a concrete foundation.

The shaft seal is a corrosion resistant maintenance-free mechanical seal.

The pump is fitted with an IEC-flanged three-phase MGE motor with frequency converter and PI-controller integrated in the motor terminal box. No additional motor protection is required as both motor and electronics are protected by integrated overload and temperature protection.

A differential pressure transmitter fitted on the pump registers the differential pressure across the pump and enables constant pressure or proportional pressure control of the pump.

A control panel enables setting of required setpoint as well as setting of pump to MIN or MAX operation or to STOP. The control panel has indicator lights for "Operation" and "Fault".

Communication with the pump is possible by means of Grundfos R100 Remote Control enabling further settings as well as reading out of a number of parameters such as "Actual value", "Speed", "Power input" and total "Power consumption".

The terminal box holds terminals for the connection of :
- Pump start/stop (potential-free contact),
- external remote setpoint setting via analog signal, 0 - 5 V, 0 - 10 V, 0(4) - 20 mA,
- 5 V voltage supply for setpoint potentiometer, Imax = 5 mA,
- differential pressure sensor factory-fitted,
- input for forced control to MIN or MAX (potential-free contact),
- potential-free fault signal relay with changeover contact,
- RS485 GENIbus.

Qty.	Description

Controls:

Frequency converter:	Built-in

Liquid:

Pumped liquid:	Water
Liquid temperature range:	-25 .. 120 °C
Selected liquid temperature:	20 °C
Density:	998.2 kg/m³

Technical:

Pump speed on which pump data are based:	2910 rpm
Rated flow:	56.3 m³/h
Rated head:	33.6 m
Actual impeller diameter:	172 mm
Code for shaft seal:	BQQE
Curve tolerance:	ISO9906:2012 3B2

Materials:

Pump housing:	Cast iron EN-GJL-250 ASTM class 35
Impeller:	Cast iron EN-GJL-200 ASTM class 30

Installation:

Range of ambient temperature:	-20 .. 50 °C
Maximum operating pressure:	16 bar
Max pressure at stated temp:	16 bar / 120 °C
Type of connection:	DIN
Size of connection:	DN 65
Pressure rating for connection:	PN 16
Port-to-port length:	360 mm
Flange size for motor:	FF265

Electrical data:

Motor type:	132SF
IE Efficiency class:	IE5
Rated power - P2:	7.5 kW
Mains frequency:	50 Hz
Rated voltage:	3 x 380-500 V
Rated current:	14.1-11.2 A
Cos phi - power factor:	0.93-0.89
Rated speed:	360-4000 rpm
Efficiency:	92.5%
Motor efficiency at full load:	92.5 %
Number of poles:	2
Enclosure class (IEC 34-5):	IP55
Insulation class (IEC 85):	F
Motor No:	98971272

Others:

Minimum efficiency index, MEI ≥:	0.70
Net weight:	93.2 kg
Gross weight:	112 kg
Shipping volume:	0.39 m³
Danish VVS No.:	381944410
Finnish LVI No.:	4616394
Norwegian NRF no.:	9043622
Country of origin:	HU
Custom tariff no.:	84137051

99114672 TPE 65-410/2 S-A-F-A-BQQE-MDB 50 Hz

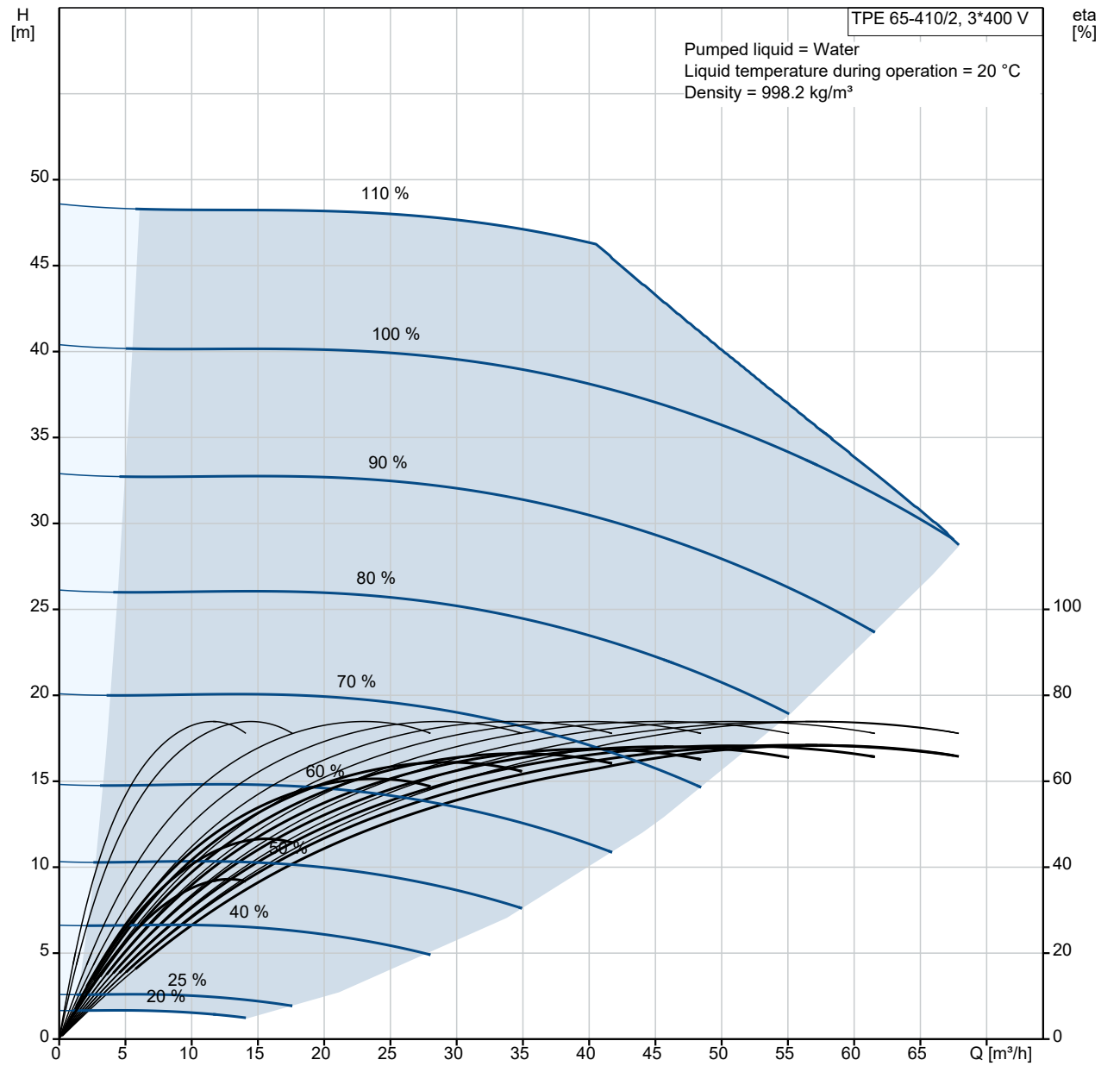

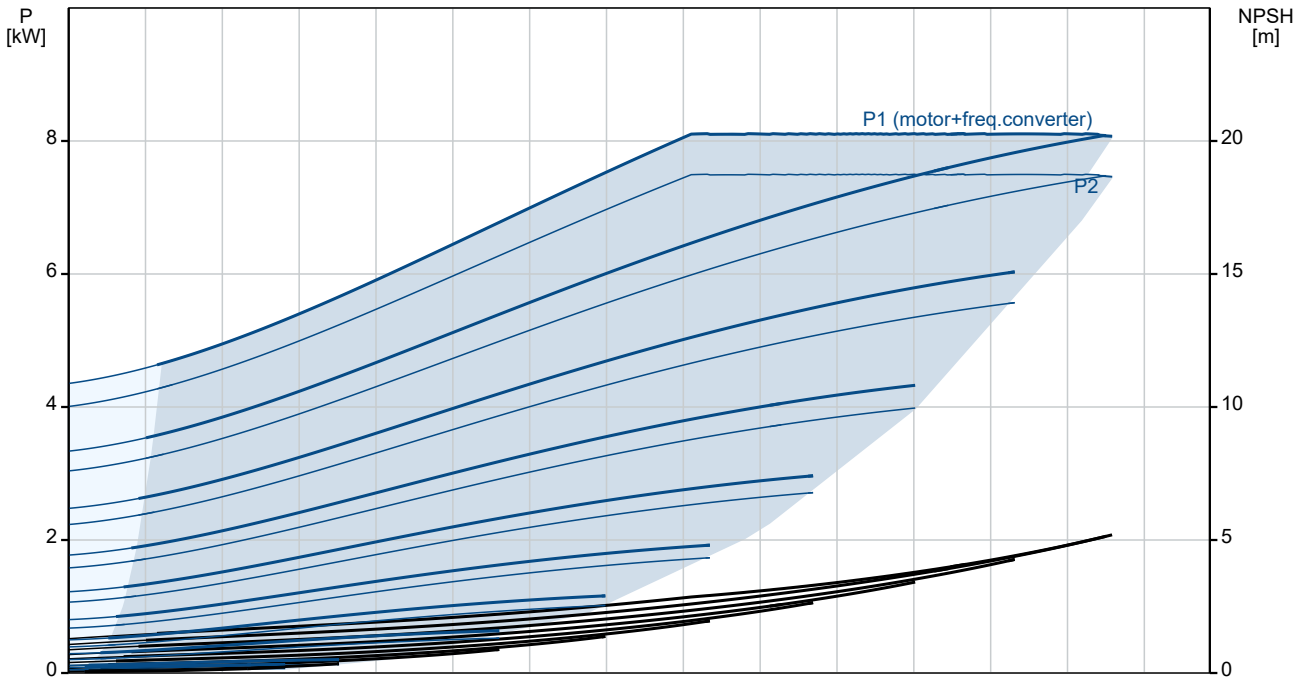

Description	Value
General information:	
Product name:	TPE 65-410/2 S-A-F-A-BQQE-MDB
Product No:	99114672
EAN number:	5712607033705
Technical:	
Pump speed on which pump data are based:	2910 rpm
Rated flow:	56.3 m³/h
Rated head:	33.6 m
Maximum head:	410 dm
Actual impeller diameter:	172 mm
Code for shaft seal:	BQQE
Curve tolerance:	ISO9906:2012 3B2
Pump version:	A
Materials:	
Pump housing:	Cast iron
Pump housing:	EN-GJL-250
Pump housing:	ASTM class 35
Impeller:	Cast iron
Impeller:	EN-GJL-200
Impeller:	ASTM class 30
Material code:	A
Installation:	
Range of ambient temperature:	-20 .. 50 °C
Maximum operating pressure:	16 bar
Max pressure at stated temp:	16 bar / 120 °C
Type of connection:	DIN
Size of connection:	DN 65
Pressure rating for connection:	PN 16
Port-to-port length:	360 mm
Flange size for motor:	FF265
Connect code:	F
Liquid:	
Pumped liquid:	Water
Liquid temperature range:	-25 .. 120 °C
Selected liquid temperature:	20 °C
Density:	998.2 kg/m³
Electrical data:	
Motor type:	132SF
IE Efficiency class:	IE5
Rated power - P2:	7.5 kW
Mains frequency:	50 Hz
Rated voltage:	3 x 380-500 V
Rated current:	14.1-11.2 A
Cos phi - power factor:	0.93-0.89
Rated speed:	360-4000 rpm
Efficiency:	92.5%
Motor efficiency at full load:	92.5 %
Number of poles:	2
Enclosure class (IEC 34-5):	IP55
Insulation class (IEC 85):	F
Motor protec:	ELEC
Motor No:	98971272
Controls:	
Control panel:	HMI300 - Advanced
Function Module:	FM300 - Advanced
Frequency converter:	Built-in
Others:	
Minimum efficiency index, MEI ≥:	0.70
Net weight:	93.2 kg
Gross weight:	112 kg
Shipping volume:	0.39 m³
Config. file no:	99247887

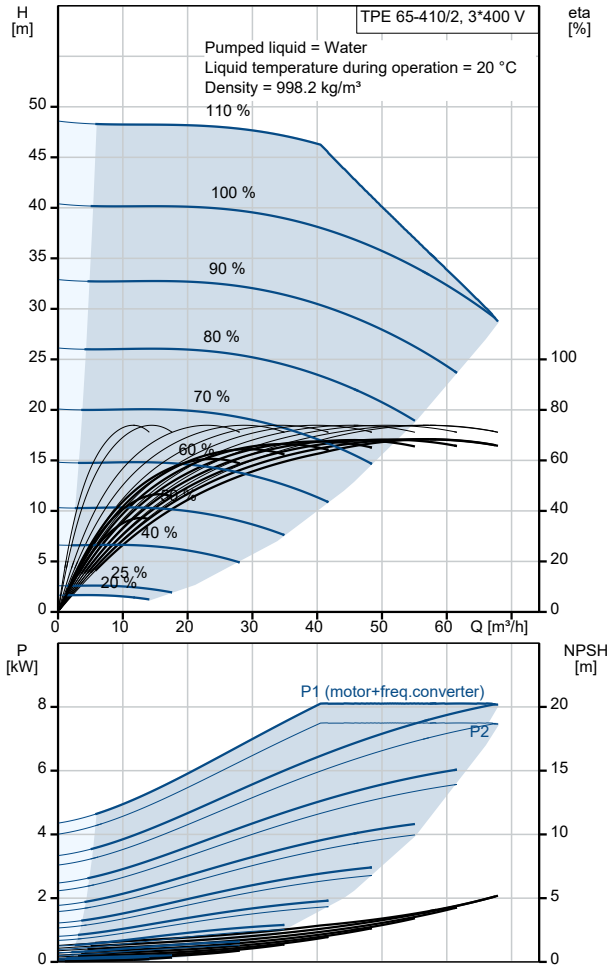

Description	Value
Danish VVS No.:	381944410
Finnish LVI No.:	4616394
Norwegian NRF no.:	9043622
Country of origin:	HU
Custom tariff no.:	84137051

99114672 TPE 65-410/2 S-A-F-A-BQQE-MDB 50 Hz

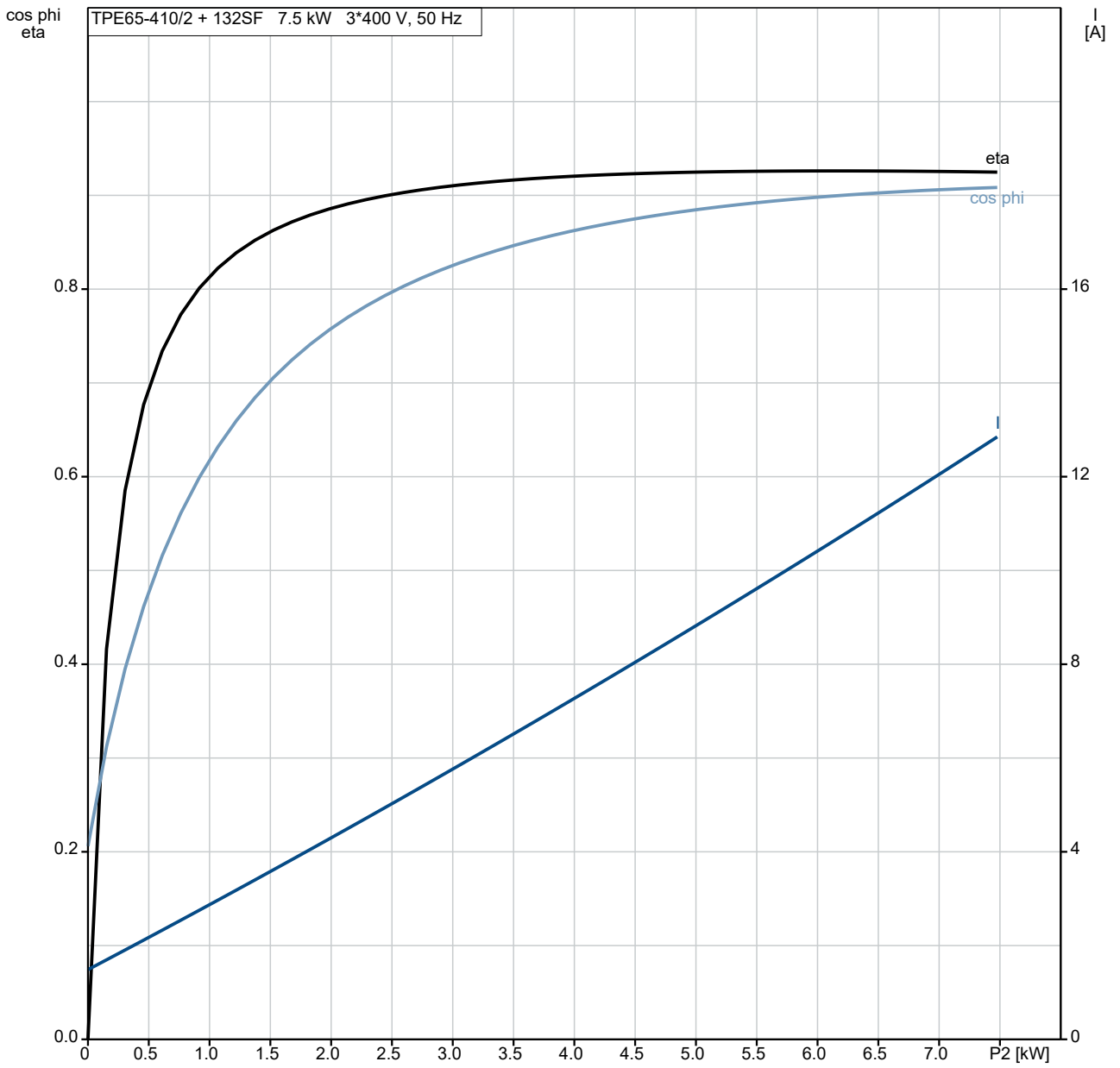

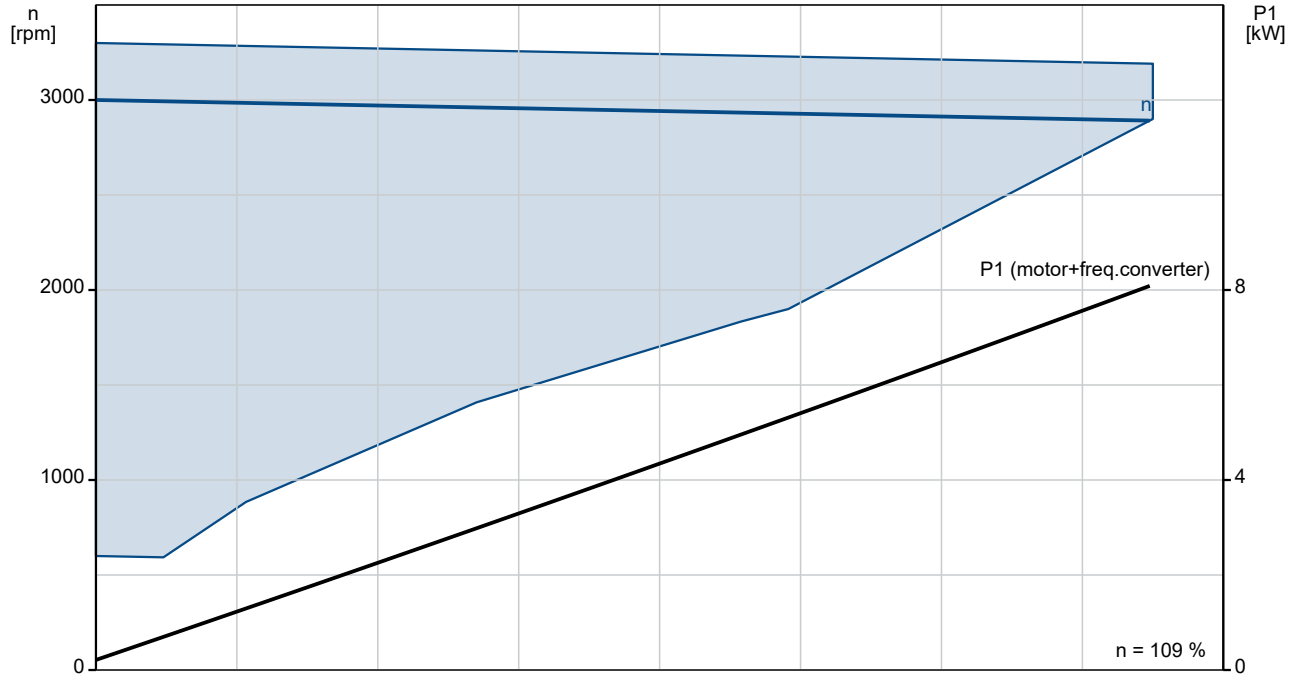

99114672 TPE 65-410/2 S-A-F-A-BQQE-MDB 50 Hz

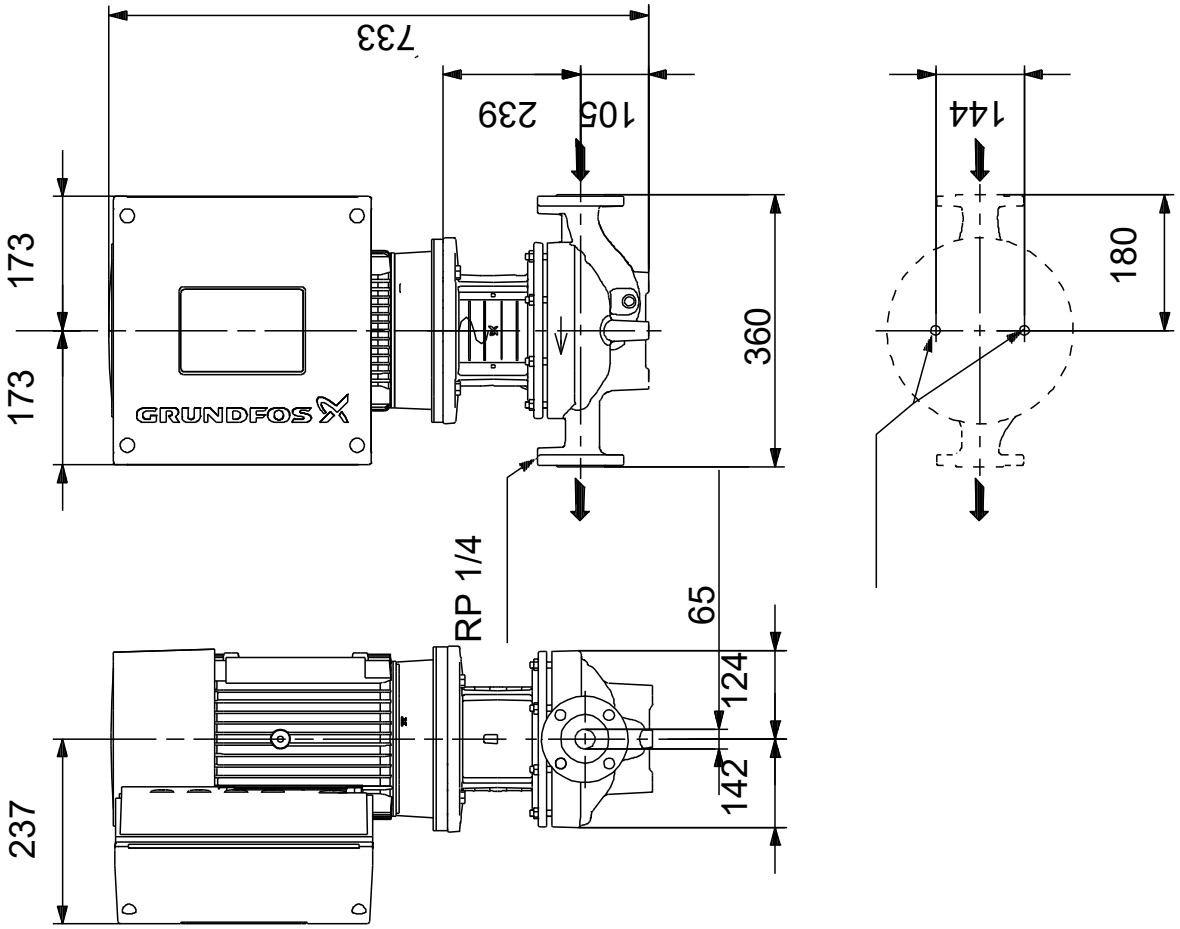

Note! All units are in [mm] unless others are stated.
Disclaimer: This simplified dimensional drawing does not show all details.

Spare parts TPE 65-410/2, Product No. 99114672
Produced After 1811 (production year and week number)

Pos	Omschrijving	Opmerking tekst	Classificatie Gegevens	Onderdeelnr.	Aantal	Eenheid
-	Kit, bracket			99184283	1	pcs
	Pan head thread forming screw				1	
	Bracket				1	
152	Cross recess countersunk screw				1	
-	Kit, capillary tubes			99184237	1	pcs
508	Tube				1	
509	Capillary tube.				1	
-	Kit, sensor			99268414	1	pcs
	Housing				1	
	Clip				1	
	Fitting				2	
7a	Pan washer head screw				2	
501	Sensor				1	
510	Mounting bush.				2	
530	Cable				1	
-	Motor				1	pcs
-	Kit, Ball bearing			98881521	1	
153	Ball bearing		Designation: 6206.2Z.C3.SYN			1
154	Ball bearing					1
156d	Seal ring					1
156c	Seal ring					1
157	O-ring		Diameter: 62			1
			Material type: NBR			
			Thickness: 3			
158	Waved washer					1
-	Kit, Blanking plug			99052476	1	
252b	Blind plug					1
252b	Plug cpl.					5
-	Kit, cable gland			98736115	1	
293	Cable glands set					1
-	Kit, connector plugs			98403113	1	
266	Connector plug 10-pole					1
266	Connector plug 2-pole					1
266	Connector plug 8-pole					1
266	Connector plug 8-pole					1
266	Connector plug 8-pole					1
266	Connector plug 3-pole					1
266	Connector plug 3-pole					1
266	Connector plug 3-pole					1
-	Kit, control box			98878620	1	
251d	Pan head thread forming screw					4
251b	Control box					1
251a	Control box cpl.					1
252b	Blind plug					1
252b	Plug cpl.					5
266	Connector plug 10-pole					1
266	Connector plug 8-pole					1
266	Connector plug 8-pole					1
266	Connector plug 8-pole					1
266	Connector plug 3-pole					1
266	Connector plug 3-pole					1
266	Connector plug 3-pole					1
268a	Base					2
268	Pan head screw					2
273b	Battery					1
273a	Cross recess Pan head screw					4
273	Funct. Module cpl.					1
275a	Pin					1

Pos	Omschrijving	Opmerking tekst	Classificatie Gegevens	Onderdeelnr.	Aantal	Eenheid
277b	Spring				4	
277a	Cross recess Pan head screw				1	
277	Cover				1	
286	Spacer				1	
287	Cover				1	
288b	Retaining ring				8	
288a	Pan head thread forming screw				8	
288	Wire clamp				4	
289a	Pan head thread forming screw				1	
289	Wire clamp				1	
290	Control panel, cpl.				1	
301	Jumper				1	
-	Kit, Control box upper			98869871	1	
251b	Pan head thread forming screw				4	
251b	Control box				1	
-	Kit, Control panel			98939971	1	
290	Control panel, cpl.				1	
-	Kit, cover			98330622	1	
287	Cover				1	
-	Kit, end shield (NDE)			98869885	1	
150b	O-ring				1	
156c	Seal ring				1	
156.a	End shield NDE				1	
157	O-ring		Diameter: 62		1	
			Material type: NBR			
			Thickness: 3			
158	Waved washer				1	
206	Pan head thread forming screw				4	
206	Hex socket head cap screw				4	
207b	Nut				4	
-	Kit, fan			98869879	1	
152	Pan head thread forming screw				4	
156c	Seal ring				1	
156	Fan				1	
-	Kit, fan cover			99957566	1	
151	Fan cover				1	
152	Pan head thread forming screw				4	
-	Kit, flange (DE)			98869905	1	
	Glue				0	
150b	O-ring				1	
155a	Bearing cover				1	
156c	Seal ring				1	
156b	Flange				1	
185	Hex socket head cap screw				4	
201c	Drain plug				4	
208b	Nut				4	
208a	Gasket				3	
208	Hex socket head cap screw		Designation: DIN912		3	
			Length (mm): 40			
			Thread: M5			
-	Kit, Funct. module			98334777	1	
273a	Cross recess Pan head screw				5	
273	Funct. Module cpl.				1	
275a	Pin				1	
286	Spacer				1	
-	Kit, Isolation cover			98859523	1	
277b	Spring				4	
277a	Cross recess Pan head screw				1	
277	Cover				1	
-	Kit, Lower part cpl.			98859573	1	
178	Pan head thread forming screw				4	
251a	Control box cpl.				1	
275a	Pin				1	

Pos	Omschrijving	Opmerking tekst	Classificatie Gegevens	Onderdeelnr.	Aantal	Eenheid
277a	Cross recess Pan head screw				1	
277	Cover				1	
-	Kit, motor			99010794	1	
	Hex socket head cap screw				2	
	Terminal				6	
40	Parallel key				1	
66a	Washer				2	
99a	Retaining ring				1	
111	Ball bearing		Designation: 6206.2Z.C3.SYN		1	
118a	Hex socket head cap screw				4	
150b	O-ring				2	
150	Stator w/housing				1	
151	Fan cover				1	
152	Pan head thread forming screw				4	
153	Ball bearing				1	
155a	Bearing cover				1	
156d	Gasket				1	
156c	Seal ring				1	
156c	Seal ring				1	
156b	Flange				1	
156.a	End shield NDE				1	
156	Fan				1	
157	O-ring		Diameter: 62		1	
			Material type: NBR			
			Thickness: 3			
158	Waved washer				1	
172	Shaft w/rotor				1	
185	Hex socket head cap screw				4	
186	Drain plug				4	
187	Retaining ring				1	
203	Terminal plug				1	
208b	Nut				4	
208b	Nut				4	
208a	Gasket				3	
208	Hex socket head cap screw		Designation: DIN912		3	
			Length (mm): 40			
			Thread: M5			
289a	Pan head thread forming screw				2	
-	Kit, plug			99028677	1	
152	Pan head thread forming screw				2	
203	Terminal plug				1	
205	Gasket				1	
-	Kit, screws			99028725	1	
268a	Base				2	
268	Pan head screw				2	
288b	Retaining ring				8	
288a	Pan head thread forming screw				8	
288	Wire clamp				4	
289a	Pan head thread forming screw				1	
289	Wire clamp				1	
-	Kit, staybolts			98881543	1	
181	Pan head staybolt				4	
	Lifting device			99140040	2	
111	Ball bearing		Designation: 6206.2Z.C3.SYN	99078033	1	
111	Ball bearing		Designation: 6206.2Z.C3.SYN	97501070	1	
152	Pan head thread forming screw			99834207	2	
152	Pan head thread forming screw			99814578	2	
153	Ball bearing			98638919	1	
186	Drain plug			99980519	4	
251d	Pan head thread forming screw			98995460	4	
266	Connector plug 3-pole			99421265	1	

Pos	Omschrijving	Opmerking tekst	Classificatie Gegevens	Onderdeelnr.	Aantal	Eenheid
1a	Motor stool			98996940	1	pcs
18	Plug			96620482	1	pcs
18	Plug			98164277	1	pcs
19	Pipe plug		Thread: R 3/8	96620487	2	pcs
49	Impeller		Outer diameter: 172	98296615	1	pcs
- 50	Pump housing cpl.			98925095	1	pcs
36	Nut		Thread: M10	96620484	6	
67	Nut		Thread: M14	92526531	1	pcs
72a	O-ring			92547662	1	pcs
72a	O-ring			92526508	1	pcs
72a	O-ring			97511824	1	pcs
72a	O-ring			99756265	1	pcs
77a	Pan head screw			99266550	4	pcs
105	Shaft seal			99380916	1	pcs
105	Shaft seal			99884645	1	pcs
510	Mounting bush.			99079267	2	pcs