Inventflow: Grundfos A-partner

Grundfos CRN 95-2-2 A-F-A-E-HQQE

Find the pump here:
https://inventflow.nl/en/pompenfilter/crn/grundfos-crn-95-2-2-a-f-a-e-hqqe

Contact

info@inventflow.nl
+31 (0) 546 45 80 72

Datasheet

Qty.	Description
1	**CRN 95-2-2 A-F-A-E-HQQE**

Note! Product picture may differ from actual product

Product No.: 99141759

Vertical, multistage centrifugal pump with inlet and outlet ports on same the level (inline). Pump materials in contact with the liquid are in high-grade stainless steel. The Grundfos cartridge shaft seal ensures high reliability, safe handling, and easy access and service. Power transmission is via a rigid split coupling. Pipe connection is via DIN flanges.

The pump is fitted with a 3-phase, fan-cooled asynchronous motor.

Liquid:

Pumped liquid:	Water
Liquid temperature range:	-40 .. 120 °C
Selected liquid temperature:	20 °C
Density:	998.2 kg/m³

Technical:

Pump speed on which pump data are based:	2950 rpm
Rated flow:	95 m³/h
Rated head:	32.6 m
Pump orientation:	Vertical
Shaft seal arrangement:	Single
Code for shaft seal:	HQQE
Approvals:	CE,EAC,UKCA,ACS,WRAS
Curve tolerance:	ISO9906:2012 3B

Materials:

Base:	Stainless steel EN 1.4408
Impeller:	Stainless steel EN 1.4401
Bearing:	WC/WC
Support bearing:	Graflon
Material certified according to:	European standards

Installation:

Maximum ambient temperature:	60 °C
Maximum operating pressure:	16 bar
Max pressure at stated temp:	16 bar / 120 °C
Type of connection:	DIN
Size of inlet connection:	DN 100
Size of outlet connection:	DN 100
Pressure rating for connection:	PN 16
Flange size for motor:	FF300

Electrical data:

Motor standard:	IEC
Motor type:	160MB
IE Efficiency class:	IE3

Qty.	Description	
	Rated power - P2:	11 kW
	Power (P2) required by pump:	11 kW
	Mains frequency:	50 Hz
	Rated voltage:	3 x 380-415D/660-690Y V
	Rated current:	20,8-19,8/12,0-11,8 A
	Starting current:	660-780 %
	Cos phi - power factor:	0.88-0.84
	Rated speed:	2940-2950 rpm
	Efficiency:	IE3 91,2%
	Motor efficiency at full load:	91.2-91.2 %
	Motor efficiency at 3/4 load:	91.8 %
	Motor efficiency at 1/2 load:	91.3 %
	Number of poles:	2
	Enclosure class (IEC 34-5):	55 Dust/Jetting
	Insulation class (IEC 85):	F
	Motor No:	85U17524
	Controls:	
	Frequency converter:	NONE
	Others:	
	Net weight:	194 kg
	Gross weight:	237 kg
	Shipping volume:	0.611 m³
	Finnish LVI No.:	4925614
	Thrust handling device:	N
	Country of origin:	DK
	Custom tariff no.:	84137075

99141759 CRN 95-2-2 A-F-A-E-HQQE 50 Hz

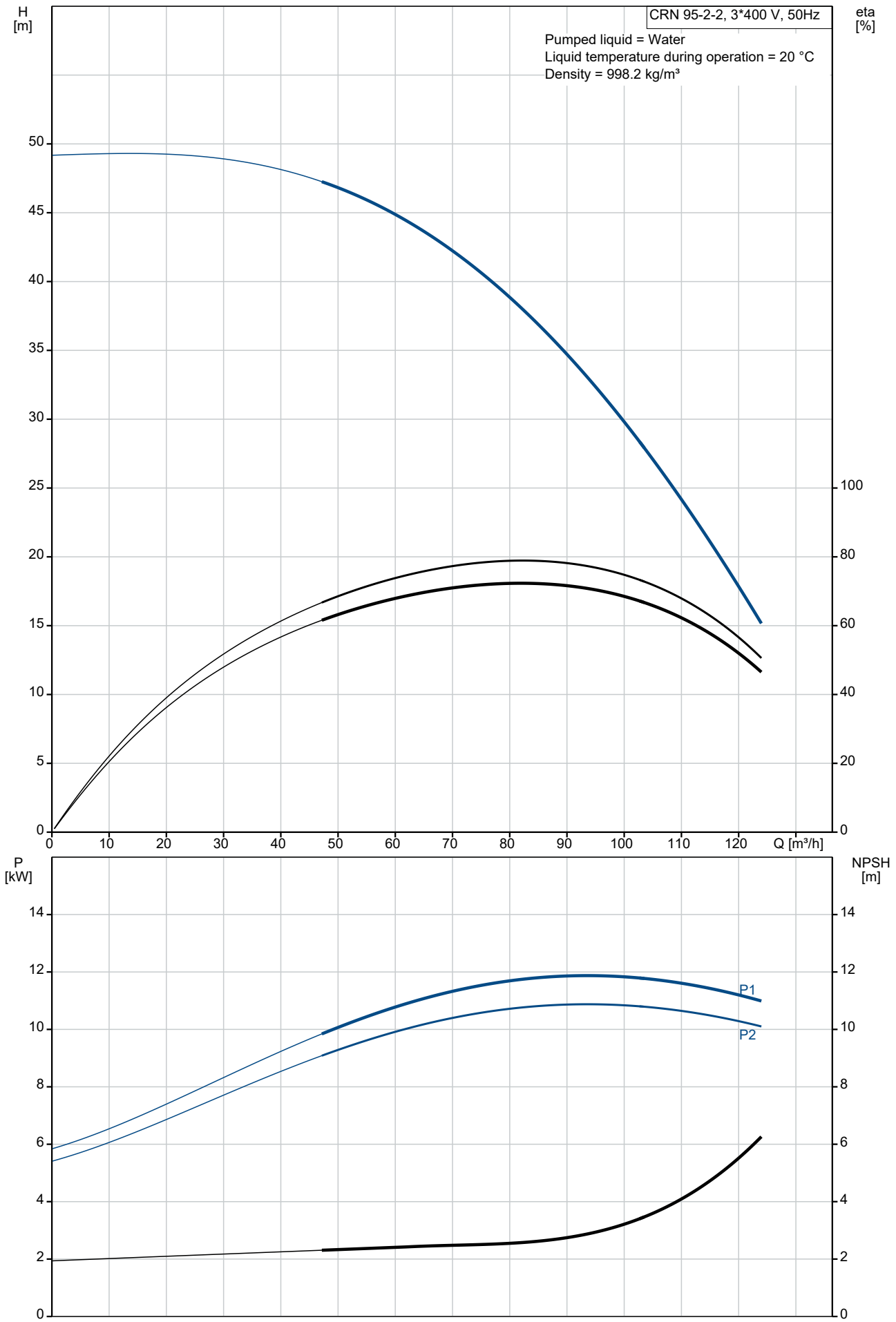

Description	Value
General information:	
Product name:	CRN 95-2-2 A-F-A-E-HQQE
Product No:	99141759
EAN number:	5712607527617
Technical:	
Pump speed on which pump data are based:	2950 rpm
Rated flow:	95 m³/h
Rated head:	32.6 m
Maximum head:	49.3 m
Stages:	2
Impellers:	2
Number of reduced-diameter impellers:	2
Low NPSH:	N
Pump orientation:	Vertical
Shaft seal arrangement:	Single
Code for shaft seal:	HQQE
Approvals:	CE,EAC,UKCA,ACS,WRAS
Curve tolerance:	ISO9906:2012 3B
Pump version:	A
Model:	A
Cooling:	IC 411
Materials:	
Base:	Stainless steel
Base:	EN 1.4408
Impeller:	Stainless steel
Impeller:	EN 1.4401
Material code:	A
Code for rubber:	E
Bearing:	WC/WC
Support bearing:	Graflon
Material certified according to:	European standards
Installation:	
Maximum ambient temperature:	60 °C
Maximum operating pressure:	16 bar
Max pressure at stated temp:	16 bar / 120 °C
Type of connection:	DIN
Size of inlet connection:	DN 100
Size of outlet connection:	DN 100
Pressure rating for connection:	PN 16
Flange size for motor:	FF300
Connect code:	F
Liquid:	
Pumped liquid:	Water
Liquid temperature range:	-40 .. 120 °C
Selected liquid temperature:	20 °C
Density:	998.2 kg/m³
Electrical data:	
Motor standard:	IEC
Motor type:	160MB
IE Efficiency class:	IE3
Rated power - P2:	11 kW
Power (P2) required by pump:	11 kW
Mains frequency:	50 Hz
Rated voltage:	3 x 380-415D/660-690Y V
Rated current:	20,8-19,8/12,0-11,8 A
Starting current:	660-780 %
Cos phi - power factor:	0.88-0.84
Rated speed:	2940-2950 rpm
Efficiency:	IE3 91,2%
Motor efficiency at full load:	91.2-91.2 %
Motor efficiency at 3/4 load:	91.8 %

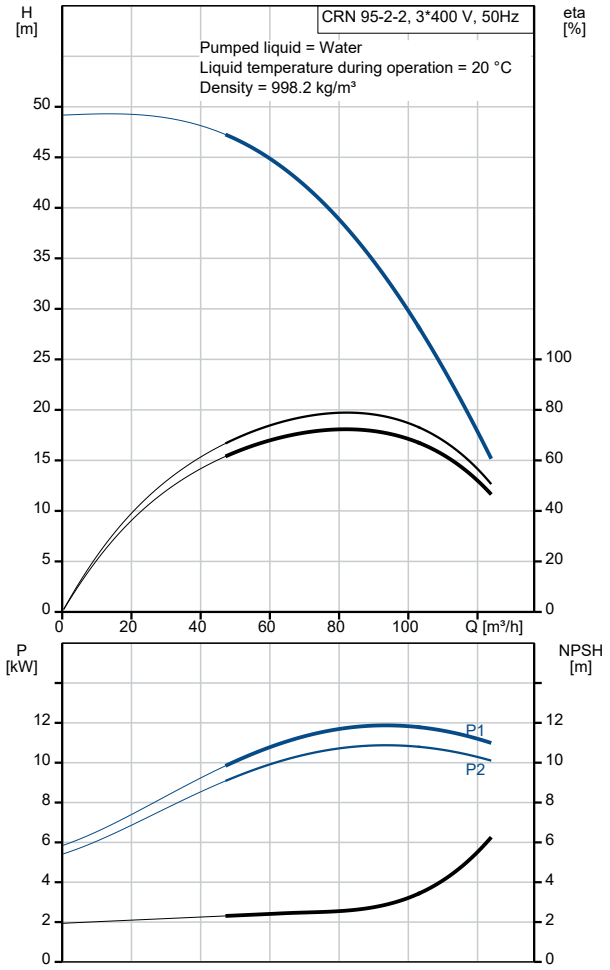

Description	Value
Motor efficiency at 1/2 load:	91.3 %
Number of poles:	2
Enclosure class (IEC 34-5):	55 Dust/Jetting
Insulation class (IEC 85):	F
Motor protec:	PTC
Motor No:	85U17524
Controls:	
Frequency converter:	NONE
Others:	
Net weight:	194 kg
Gross weight:	237 kg
Shipping volume:	0.611 m³
Finnish LVI No.:	4925614
Thrust handling device:	N
Country of origin:	DK
Custom tariff no.:	84137075

99141759 CRN 95-2-2 A-F-A-E-HQQE 50 Hz

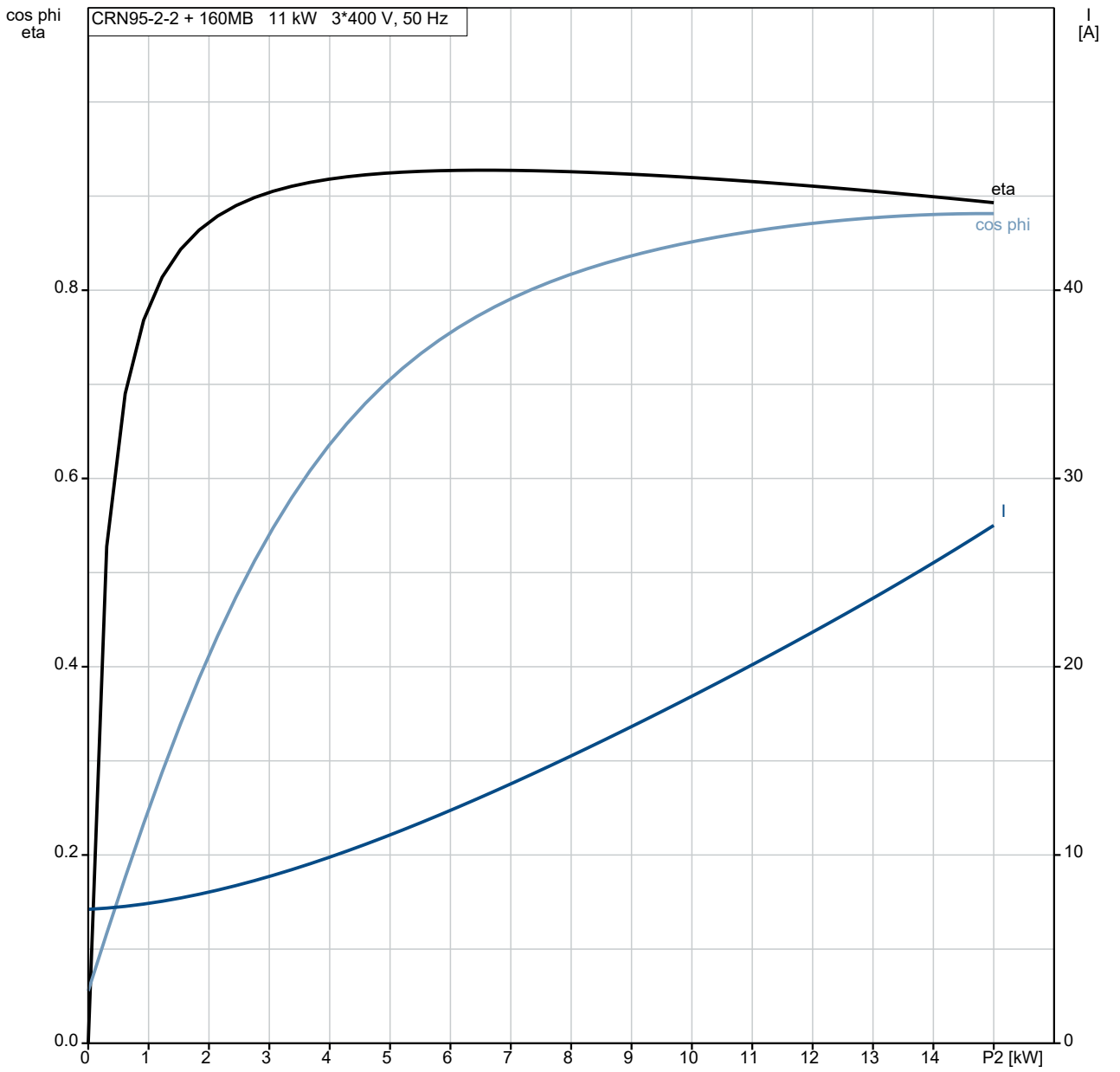

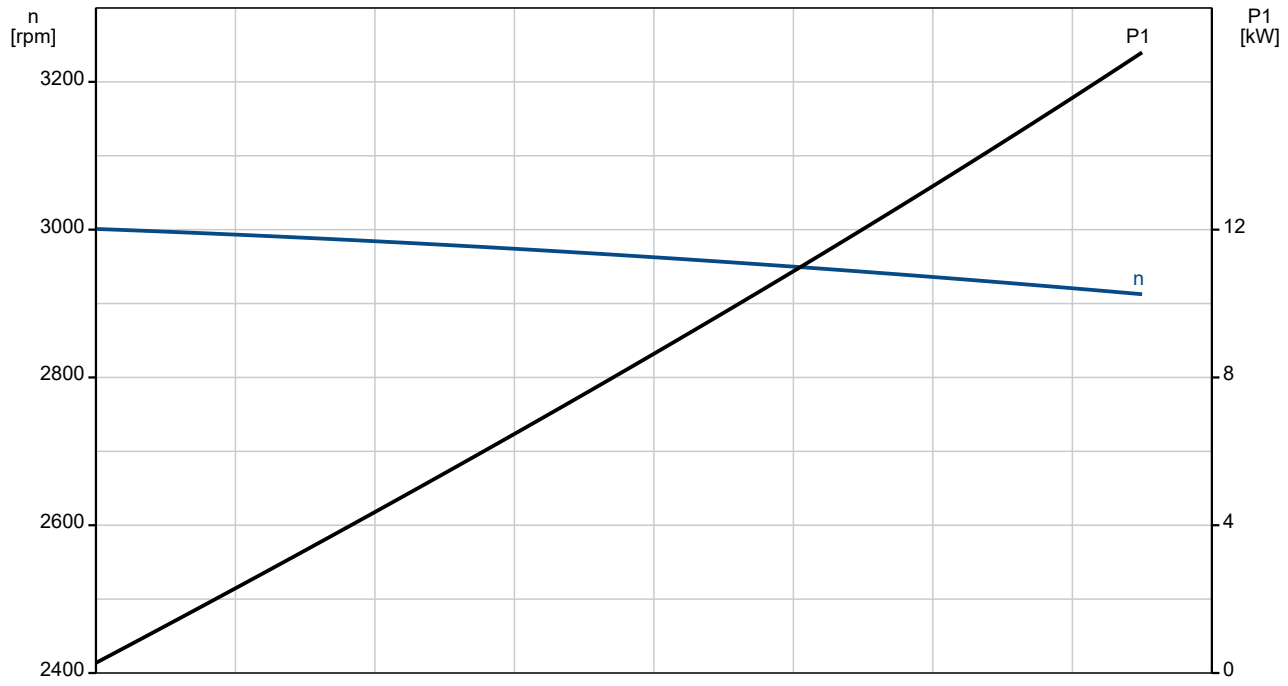

99141759 CRN 95-2-2 A-F-A-E-HQQE 50 Hz

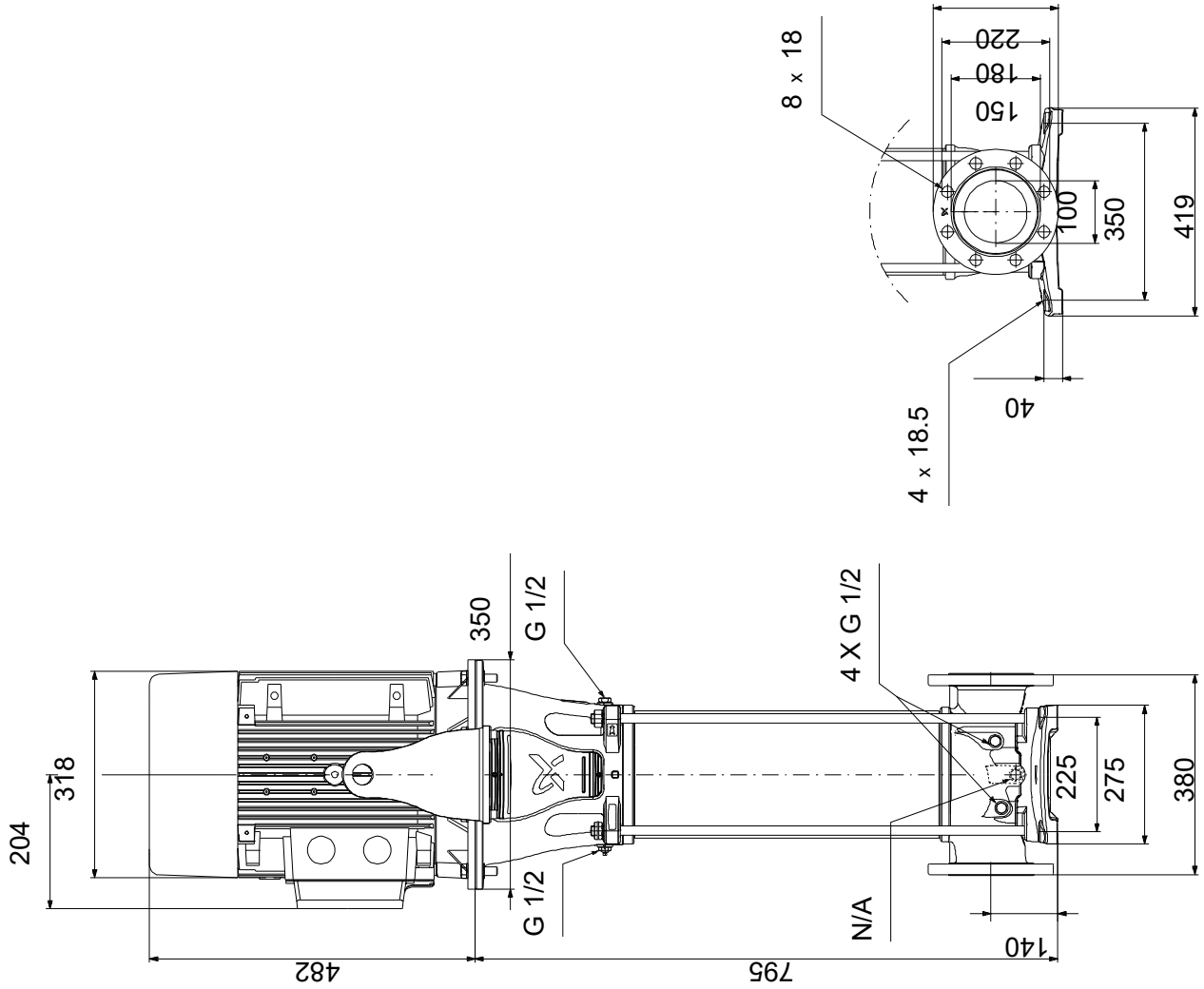

Note! All units are in [mm] unless others are stated.
Disclaimer: This simplified dimensional drawing does not show all details.

Spare parts CRN 95-2-2, Product No. 99141759
Produced After 1827 (production year and week number)

	Pos	Omschrijving	Opmerking tekst	Classificatie Gegevens	Onderdeelnr.	Aantal	Eenheid
-		Kit, bearing			99415812	1	pcs
-	47a	Bearing cpl.				1	
		Driver					1
		Retainer					1
-		Kit, coupling			99190035	1	pcs
-	7	Coupling cpl.				1	
	10a	Coupling					2
	9	Hex socket head cap screw		Designation: DIN 912		4	
				Length (mm): 25			
				Thread: M10			
	10	Parallel pin				1	
-		Kit, coupling guard			99196379	2	pcs
	7b	Lock washer				2	
	7a	Screw				2	
	7	Coupling guard				1	
-		Kit, flange			99432754	1	pcs
	440b	Lock ring				1	
	440a	Flange		Diameter: DN 100		1	
				Pressure: PN 16			
-		Kit, impeller,reduced,1st.			99554054	2	pcs
	48	Nut				1	
	49h	Impeller				1	
	49b	Split cone				1	
-		Kit, O-rings			99262378	1	pcs
	37	O-ring				2	
	38	O-ring				8	
	109	O-ring				1	
	110	O-ring		Diameter: 21,5		1	
				Material type: EPDM			
				Thickness: 4,25			
-		Kit, plug			99262366	1	pcs
-		Plug cpl.				5	
	25	Plug					1
	38	O-ring					1
-		Air vent screw				1	
-	18	Air vent screw					1
		Spindle					
		Plug					
	38	O-ring					1
-		Kit, shaft seal HQQE			99262346	1	pcs
		Grinding device				1	
	105	Shaft seal				1	
-		Kit, staybolts			99190079	4	pcs
	26	Staybolt				1	
	36	Nut				1	
	66a	Washer				1	
-		Kit, strap			99190047	2	pcs
	26c	Washer		Designation: DIN 125A		1	
				Thickness: 1,6			
	26b	Hex head screw				1	
	26a	Strap				1	
-		Kit, wear parts			99262415	1	pcs
		Adjusting fork				1	
	45	Neck ring				4	
	47d	Lock ring				3	
	47c	Bush				3	
	65	Neck ring retainer				4	
-		Motor				1	pcs
-		Kit, bearing cpl.			96796676	1	

	Pos	Omschrijving	Opmerking tekst	Classificatie Gegevens	Onderdeelnr.	Aantal	Eenheid
	32b	Waved washer					2
	153	Angular-contact bearing					1
	154	Ball bearing					1
	157	O-ring					1
	159	V-ring					1
-		Kit, bearing plate			96796664	1	
	155.a	Bearing cover					1
	208a	Gasket					3
	208	Hex socket head cap screw		Designation: DIN912			3
				Length (mm): 40			
				Thread: M5			
-		Kit, eyebolt			96796712	1	
	189	Eyebolt					2
-		Kit, fan			96796654	1	
	156.c	Retaining ring					1
	156	Fan					1
-		Kit, fan cover			96796647	1	
	151	Fan cover					1
	152.a	Rubber bush					4
	152	Hex head cap screw					4
	196	Diaphragm					1
-		Kit, flange			96796662	1	
	156.b	Flange					1
	159.b	Seal ring					1
	185.b	Nut					4
	185	Hex socket head cap screw					4
	186	Drain plug					4
	195.a	Grease nipple					1
-		Kit, gaskets			96798508	1	
	184	O-ring		Diameter: 235			2
-		Kit, lubrication nipple			96796671	1	
	195.b	Grease nipple					2
	195.a	Grease nipple					1
-		Kit, ND-end shield cpl.			96796669	1	
	32b	Waved washer					1
	156.a	End shield NDE					1
	157	O-ring					1
	159	V-ring					1
	185.c	Nut					4
	185.a	Hex socket head cap screw					4
	195.b	Grease nipple					1
-		Kit, shaft seal			96843459	1	
	159.b	V-ring					1
	159	V-ring					1
-		Kit, terminal board			96796657	1	
		Terminal connection					3
		Washer					12
	36	Hex nut					12
	173	Torx Screw					1
	176.d	Terminal board					1
	176	Terminal board					1
	177	Torx Screw					1
-		Kit, terminal box cover			96796659	1	
	164	Terminal box cover					1
	273a	Pan head thread forming screw					4
	1a	Motor stool			99759902	1	pcs
	2	Cover			99196494	1	pcs
+	3	Chamber			99262581	1	pcs
-	3	Chamber			99262629	1	pcs
	47c	Bush			99321194	1	
+	3	Chamber			99196631	1	pcs
+	4a	Chamber			99446222	1	pcs
+	4a	Chamber			99446253	1	pcs
+	4a	Chamber			99415871	1	pcs

	Pos	Omschrijving	Opmerking tekst	Classificatie Gegevens	Onderdeelnr.	Aantal	Eenheid
	6	Base			99196467	1	pcs
	26c	Washer		Designation: DIN 125A	99262704	2	pcs
				Thickness: 1,6			
	26c	Washer		Designation: DIN 125A	99886930	2	pcs
				Thickness: 1,6			
	28a	Hex head screw			96620478	4	pcs
	32	Washer		Designation: DIN 125 A	98923051	8	pcs
				Internal diameter: 17			
				Outer diameter: 30			
				Thickness: 3			
	36	Nut			99262692	4	pcs
+	44	Suction part			99196613	1	pcs
	44a	Discharge part			99196621	1	pcs
	48	Nut			99262680	2	pcs
	48	Nut			99262683	2	pcs
	48	Nut			96536016	2	pcs
	49h	Impeller			99262539	2	pcs
	49h	Impeller			99262563	2	pcs
	49b	Split cone			99262686	2	pcs
	49b	Split cone			99262689	2	pcs
	51	Shaft			99196537	1	pcs
	55	Sleeve			99196420	1	pcs
	56	Base plate			99196481	1	pcs
	66a	Washer			99262699	4	pcs