Inventflow: Grundfos A-partner

Grundfos CRN 155-2 A-F-A-E-HQQE

Find the pump here:
https://inventflow.nl/en/pompenfilter/crn/grundfos-crn-155-2-a-f-a-e-hqqe

Contact

info@inventflow.nl
+31 (0) 546 45 80 72

Datasheet

Qty.	Description
1	**CRN 155-2 A-F-A-E-HQQE**

Note! Product picture may differ from actual product

Product No.: 99143272

Vertical, multistage centrifugal pump with inlet and outlet ports on same the level (inline). Pump materials in contact with the liquid are in high-grade stainless steel. The Grundfos cartridge shaft seal ensures high reliability, safe handling, and easy access and service. Power transmission is via a rigid split coupling. Pipe connection is via DIN flanges.

The pump is fitted with a 3-phase, fan-cooled asynchronous motor.

Liquid:

Pumped liquid:	Water
Liquid temperature range:	-40 .. 120 °C
Selected liquid temperature:	20 °C
Density:	998.2 kg/m³

Technical:

Pump speed on which pump data are based:	2971 rpm
Rated flow:	155 m³/h
Rated head:	55.1 m
Pump orientation:	Vertical
Shaft seal arrangement:	Single
Code for shaft seal:	HQQE
Approvals:	CE,EAC,UKCA,ACS,WRAS
Curve tolerance:	ISO9906:2012 3B

Materials:

Base:	Stainless steel EN 1.4408
Impeller:	Stainless steel EN 1.4401
Bearing:	WC/WC
Support bearing:	Graflon
Material certified according to:	European standards

Installation:

Maximum ambient temperature:	55 °C
Maximum operating pressure:	16 bar
Max pressure at stated temp:	16 bar / 120 °C
Type of connection:	DIN
Size of inlet connection:	DN 150
Size of outlet connection:	DN 150
Pressure rating for connection:	PN 16
Flange size for motor:	FF350

Electrical data:

Motor standard:	IEC
Motor type:	SIEMENS
IE Efficiency class:	IE3

Qty.	Description	
	Rated power - P2:	30 kW
	Power (P2) required by pump:	30 kW
	Mains frequency:	50 Hz
	Rated voltage:	3 x 380-420D/660-725Y V
	Rated current:	56,0-51,0/32,0-29,5 A
	Starting current:	660-660 %
	Cos phi - power factor:	0.86
	Rated speed:	2955 rpm
	Efficiency:	IE3 93,3%
	Motor efficiency at full load:	93.3-93.3 %
	Motor efficiency at 3/4 load:	93.6-93.6 %
	Motor efficiency at 1/2 load:	93.4-93.4 %
	Number of poles:	2
	Enclosure class (IEC 34-5):	IP55
	Insulation class (IEC 85):	F
	Motor No:	81U15332
	Controls:	
	Frequency converter:	NONE
	Others:	
	Net weight:	387 kg
	Gross weight:	450 kg
	Shipping volume:	1.14 m³
	Finnish LVI No.:	4925641
	Thrust handling device:	N
	Country of origin:	DK
	Custom tariff no.:	84137075

99143272 CRN 155-2 A-F-A-E-HQQE 50 Hz

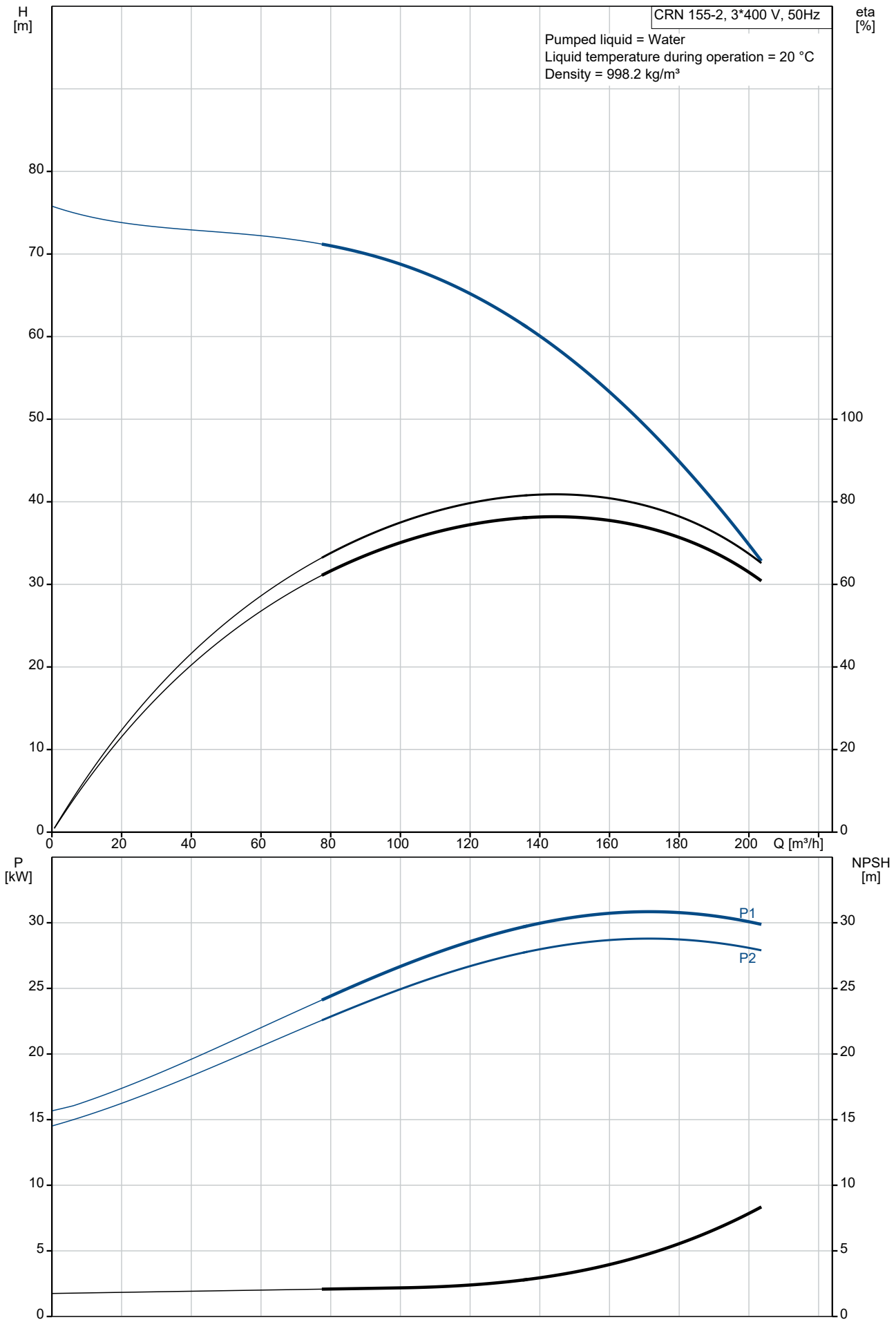

Description	Value
General information:	
Product name:	CRN 155-2 A-F-A-E-HQQE
Product No:	99143272
EAN number:	5712607553098
Technical:	
Pump speed on which pump data are based:	2971 rpm
Rated flow:	155 m³/h
Rated head:	55.1 m
Maximum head:	75.8 m
Stages:	2
Impellers:	2
Low NPSH:	N
Pump orientation:	Vertical
Shaft seal arrangement:	Single
Code for shaft seal:	HQQE
Approvals:	CE,EAC,UKCA,ACS,WRAS
Curve tolerance:	ISO9906:2012 3B
Pump version:	A
Model:	A
Cooling:	IC 411
Materials:	
Base:	Stainless steel
Base:	EN 1.4408
Impeller:	Stainless steel
Impeller:	EN 1.4401
Material code:	A
Code for rubber:	E
Bearing:	WC/WC
Support bearing:	Graflon
Material certified according to:	European standards
Installation:	
Maximum ambient temperature:	55 °C
Maximum operating pressure:	16 bar
Max pressure at stated temp:	16 bar / 120 °C
Type of connection:	DIN
Size of inlet connection:	DN 150
Size of outlet connection:	DN 150
Pressure rating for connection:	PN 16
Flange size for motor:	FF350
Connect code:	F
Liquid:	
Pumped liquid:	Water
Liquid temperature range:	-40 .. 120 °C
Selected liquid temperature:	20 °C
Density:	998.2 kg/m³
Electrical data:	
Motor standard:	IEC
Motor type:	SIEMENS
IE Efficiency class:	IE3
Rated power - P2:	30 kW
Power (P2) required by pump:	30 kW
Mains frequency:	50 Hz
Rated voltage:	3 x 380-420D/660-725Y V
Rated current:	56,0-51,0/32,0-29,5 A
Starting current:	660-660 %
Cos phi - power factor:	0.86
Rated speed:	2955 rpm
Efficiency:	IE3 93,3%
Motor efficiency at full load:	93.3-93.3 %
Motor efficiency at 3/4 load:	93.6-93.6 %
Motor efficiency at 1/2 load:	93.4-93.4 %

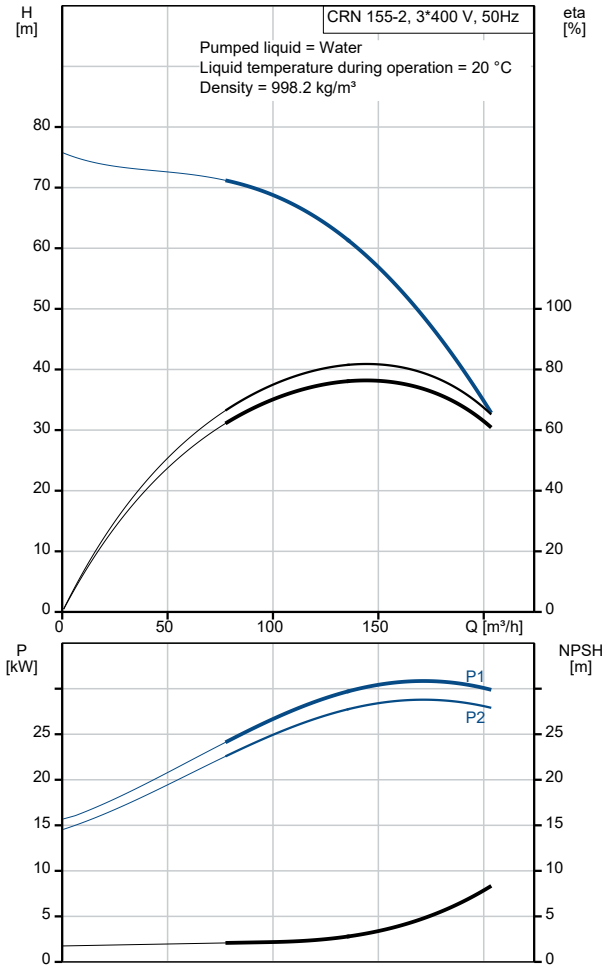

Description	Value
Number of poles:	2
Enclosure class (IEC 34-5):	IP55
Insulation class (IEC 85):	F
Motor protec:	PTC
Motor No:	81U15332
Controls:	
Frequency converter:	NONE
Others:	
Net weight:	387 kg
Gross weight:	450 kg
Shipping volume:	1.14 m³
Finnish LVI No.:	4925641
Thrust handling device:	N
Country of origin:	DK
Custom tariff no.:	84137075

99143272 CRN 155-2 A-F-A-E-HQQE 50 Hz

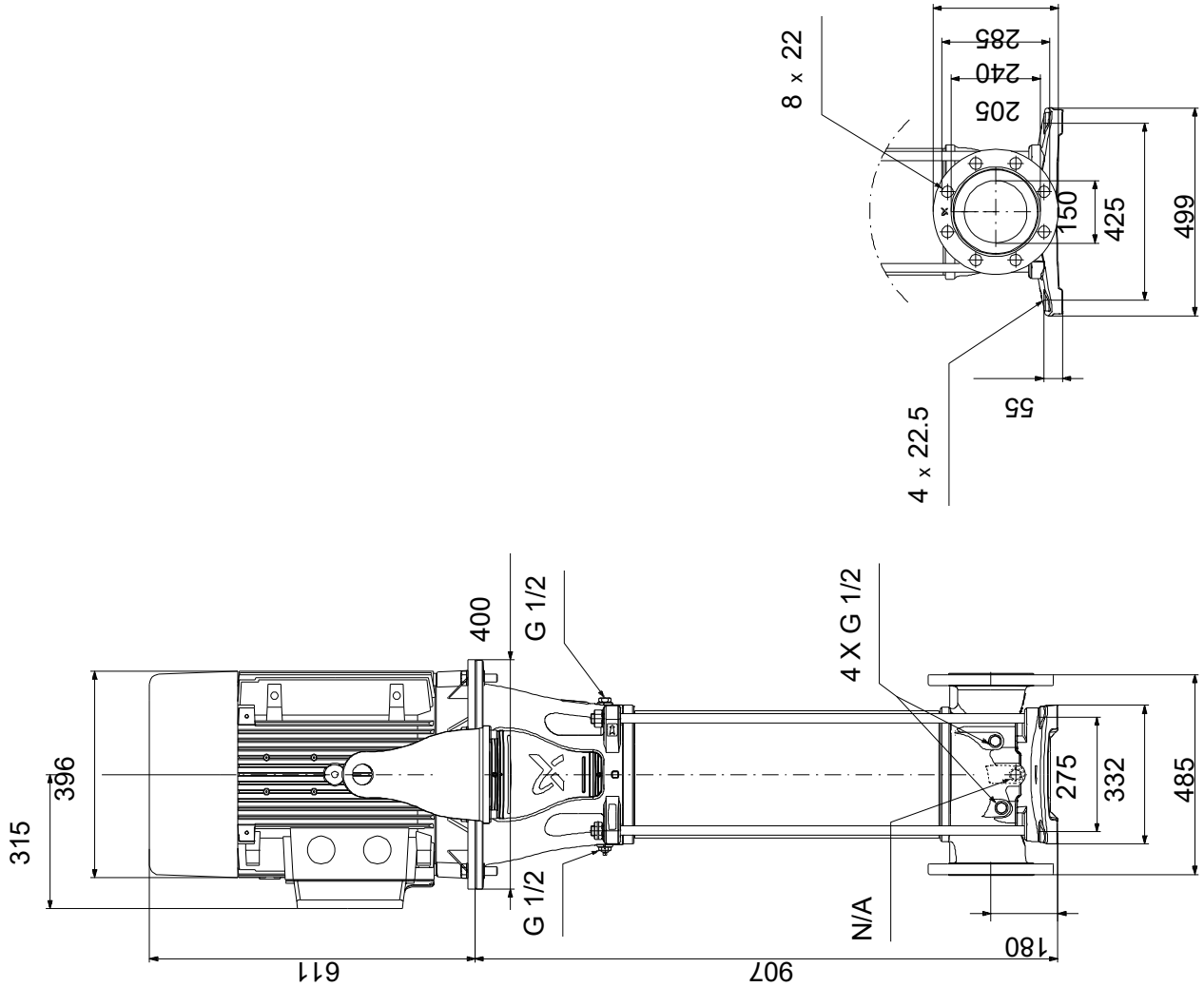

Note! All units are in [mm] unless others are stated.
Disclaimer: This simplified dimensional drawing does not show all details.

Spare parts CRN 155-2, Product No. 99143272
Produced After 1840 (production year and week number)

Pos	Omschrijving	Opmerking tekst	Classificatie Gegevens	Onderdeelnr.	Aantal	Eenheid
-	Kit, bearing			99415823	1	pcs
47g	Lock ring				1	
47a	Bearing				1	
48	Nut				1	
-	Kit, coupling			99190039	1	pcs
- 8	Coupling cpl.				1	
10a	Coupling					2
9	Hex socket head cap screw		Designation: DIN 912		4	
			Length (mm): 25			
			Thread: M10			
10	Parallel pin				1	
-	Kit, coupling guard			99196379	2	pcs
7b	Lock washer				2	
7a	Screw				2	
7	Coupling guard				1	
-	Kit, flange			99432761	1	pcs
440b	Retaining ring				1	
440a	Flange				1	
-	Kit, impeller,bearing			99432561	1	pcs
48	Nut				1	
49b	Split cone				1	
49	Impeller				1	
-	Kit, impeller,bush			99124961	1	pcs
48	Nut				1	
49b	Split cone				1	
49	Impeller				1	
-	Kit, O-rings			99262380	1	pcs
37	O-ring				2	
38	O-ring				8	
109	O-ring				1	
110	O-ring		Diameter: 21,5		1	
			Material type: EPDM			
			Thickness: 4,25			
-	Kit, plug			99262366	1	pcs
-	Plug cpl.				5	
25	Plug					1
38	O-ring					1
-	Air vent screw				1	
- 18	Air vent screw					1
	Spindle					
	Plug					
38	O-ring					1
-	Kit, shaft seal HQQE			99262346	1	pcs
	Grinding device				1	
105	Shaft seal				1	
-	Kit, staybolts			99190099	4	pcs
26	Staybolt				1	
36	Nut				1	
66a	Washer				1	
-	Kit, strap			99190059	2	pcs
26c	Washer		Designation: DIN 125A		1	
			Thickness: 1,6			
26b	Hex head screw				1	
26a	Strap				1	
-	Kit, wear parts			99262419	1	pcs
	Adjusting fork				1	
45	Neck ring				4	
47d	Lock washer				3	
47c	Bush				3	

	Pos	Omschrijving	Opmerking tekst	Classificatie Gegevens	Onderdeelnr.	Aantal	Eenheid
	65	Neck ring retainer				4	
-		Motor			99759457	1	pcs
	156	Kit, fan			98062265	1	
	151	Kit, fan cover			98062275	1	
	156b	Kit, flange			98062279	1	
		Kit, lubrication nipple			98062531	1	
	156a	Kit, ND-end shield cpl.			98062517	1	
	159b	Kit, seal ring			98062551	1	
	176	Kit, terminal board			98062236	1	
	164a	Kit, terminal box			98062262	1	
	2	Cover			99196497	1	pcs
+	3	Chamber			99262605	1	pcs
+	3	Chamber			99262663	1	pcs
+	3	Chamber			99196655	1	pcs
+	4a	Chamber			99446242	1	pcs
+	4a	Chamber			99446263	1	pcs
+	4a	Chamber			99415891	1	pcs
	6	Base			99196473	1	pcs
	26c	Washer		Designation: DIN 125A	99262704	2	pcs
				Thickness: 1,6			
	26c	Washer		Designation: DIN 125A	99886930	2	pcs
				Thickness: 1,6			
	28a	Hex head screw			96620478	2	pcs
	28	Hex head screw			99869043	2	pcs
	32	Washer		Designation: DIN 125 A	98923051	8	pcs
				Internal diameter: 17			
				Outer diameter: 30			
				Thickness: 3			
	36	Nut			99262693	4	pcs
	37	O-ring			99865786	2	pcs
+	44	Suction part			99196616	1	pcs
	44a	Discharge part			99196622	1	pcs
	48	Nut			99446217	1	pcs
	48	Nut			99262681	1	pcs
	48	Nut			99446219	1	pcs
	48	Nut			99262684	1	pcs
	49	Impeller			99262533	2	pcs
	49	Impeller			99262557	2	pcs
	49b	Split cone			99262687	2	pcs
	49b	Split cone			99262690	2	pcs
	51	Shaft			99196561	1	pcs
	55	Sleeve			99196440	1	pcs
	56	Base plate			99196486	1	pcs
	66a	Washer			99262700	4	pcs