Inventflow: Grundfos A-partner

Grundfos CRN 155-4-1 A-F-A-E-HQQE

Find the pump here:
https://inventflow.nl/en/pompenfilter/crn/grundfos-crn-155-4-1-a-f-a-e-hqqe

Contact

info@inventflow.nl
+31 (0) 546 45 80 72

Datasheet

Qty.	Description
1	**CRN 155-4-1 A-F-A-E-HQQE**

Note! Product picture may differ from actual product

Product No.: 99143275

Vertical, multistage centrifugal pump with inlet and outlet ports on same the level (inline). Pump materials in contact with the liquid are in high-grade stainless steel. The Grundfos cartridge shaft seal ensures high reliability, safe handling, and easy access and service. Power transmission is via a rigid split coupling. Pipe connection is via DIN flanges.

The pump is fitted with a 3-phase, fan-cooled asynchronous motor.

Liquid:

Pumped liquid:	Water
Liquid temperature range:	-40 .. 120 °C
Selected liquid temperature:	20 °C
Density:	998.2 kg/m³

Technical:

Pump speed on which pump data are based:	2976 rpm
Rated flow:	155 m³/h
Rated head:	102.4 m
Pump orientation:	Vertical
Shaft seal arrangement:	Single
Code for shaft seal:	HQQE
Approvals:	CE,EAC,UKCA,ACS,WRAS
Curve tolerance:	ISO9906:2012 3B

Materials:

Base:	Stainless steel EN 1.4408
Impeller:	Stainless steel EN 1.4401
Bearing:	WC/WC
Support bearing:	Graflon
Material certified according to:	European standards

Installation:

Maximum ambient temperature:	55 °C
Maximum operating pressure:	16 bar
Max pressure at stated temp:	16 bar / 120 °C
Type of connection:	DIN
Size of inlet connection:	DN 150
Size of outlet connection:	DN 150
Pressure rating for connection:	PN 16
Flange size for motor:	FF500

Electrical data:

Motor standard:	IEC
Motor type:	SIEMENS
IE Efficiency class:	IE3

Qty.	Description	
	Rated power - P2:	55 kW
	Power (P2) required by pump:	55 kW
	Mains frequency:	50 Hz
	Rated voltage:	3 x 380-420D/660-725Y V
	Rated current:	99,0-90,0/57,0-52,0 A
	Starting current:	670-670 %
	Cos phi - power factor:	0.89
	Rated speed:	2975 rpm
	Efficiency:	IE3 94,3%
	Motor efficiency at full load:	94.3-94.3 %
	Motor efficiency at 3/4 load:	94.5-94.5 %
	Motor efficiency at 1/2 load:	93.9-93.9 %
	Number of poles:	2
	Enclosure class (IEC 34-5):	IP55
	Insulation class (IEC 85):	F
	Motor No:	81U15338
	Controls:	
	Frequency converter:	NONE
	Others:	
	Net weight:	637 kg
	Gross weight:	780 kg
	Shipping volume:	2.04 m³
	Finnish LVI No.:	4925644
	Thrust handling device:	N
	Country of origin:	DK
	Custom tariff no.:	84137075

99143275 CRN 155-4-1 A-F-A-E-HQQE 50 Hz

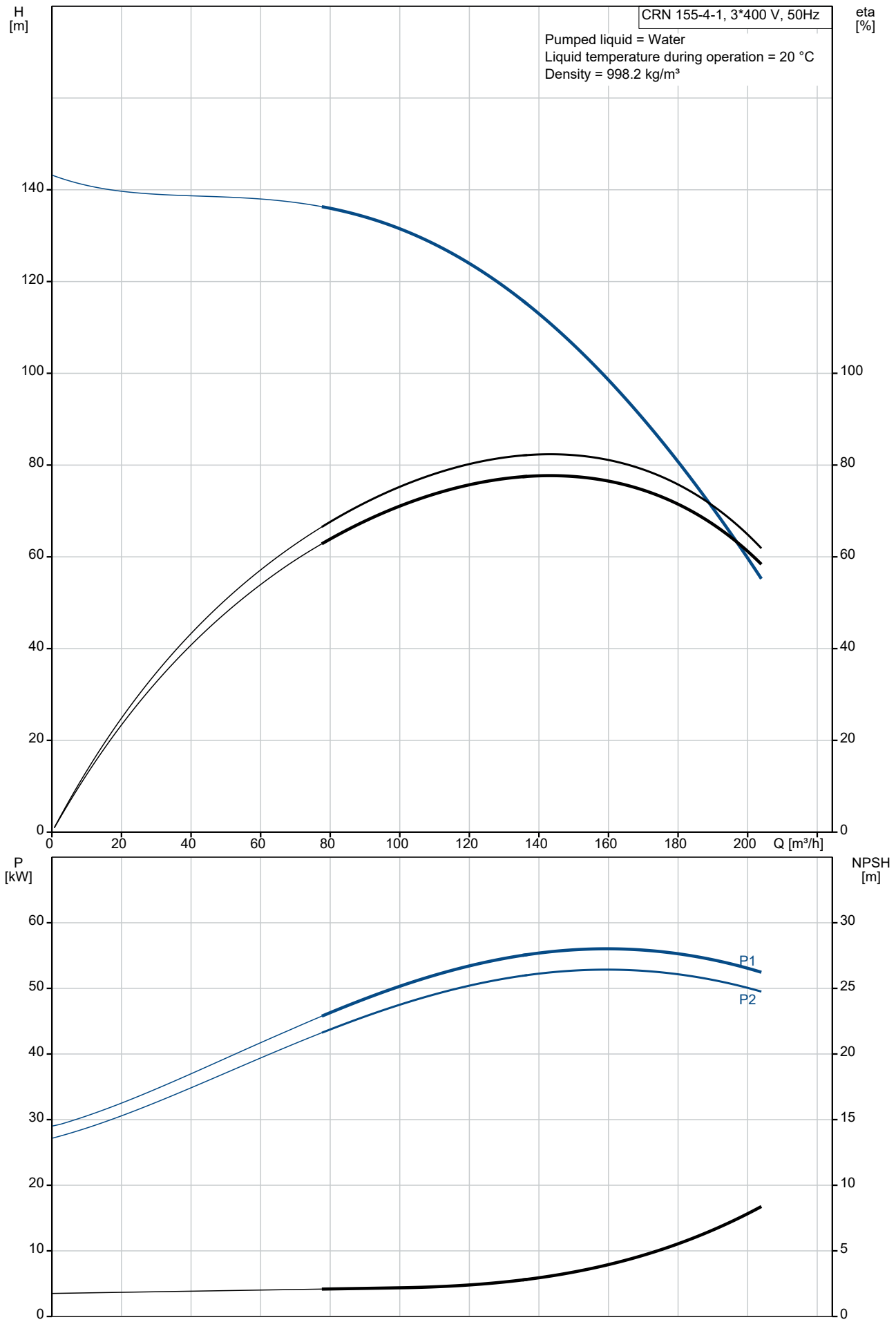

Description	Value
General information:	
Product name:	CRN 155-4-1 A-F-A-E-HQQE
Product No:	99143275
EAN number:	5712607553159
Technical:	
Pump speed on which pump data are based:	2976 rpm
Rated flow:	155 m³/h
Rated head:	102.4 m
Maximum head:	143.2 m
Stages:	4
Impellers:	4
Number of reduced-diameter impellers:	1
Low NPSH:	N
Pump orientation:	Vertical
Shaft seal arrangement:	Single
Code for shaft seal:	HQQE
Approvals:	CE,EAC,UKCA,ACS,WRAS
Curve tolerance:	ISO9906:2012 3B
Pump version:	A
Model:	A
Cooling:	IC 411
Materials:	
Base:	Stainless steel
Base:	EN 1.4408
Impeller:	Stainless steel
Impeller:	EN 1.4401
Material code:	A
Code for rubber:	E
Bearing:	WC/WC
Support bearing:	Graflon
Material certified according to:	European standards
Installation:	
Maximum ambient temperature:	55 °C
Maximum operating pressure:	16 bar
Max pressure at stated temp:	16 bar / 120 °C
Type of connection:	DIN
Size of inlet connection:	DN 150
Size of outlet connection:	DN 150
Pressure rating for connection:	PN 16
Flange size for motor:	FF500
Connect code:	F
Liquid:	
Pumped liquid:	Water
Liquid temperature range:	-40 .. 120 °C
Selected liquid temperature:	20 °C
Density:	998.2 kg/m³
Electrical data:	
Motor standard:	IEC
Motor type:	SIEMENS
IE Efficiency class:	IE3
Rated power - P2:	55 kW
Power (P2) required by pump:	55 kW
Mains frequency:	50 Hz
Rated voltage:	3 x 380-420D/660-725Y V
Rated current:	99,0-90,0/57,0-52,0 A
Starting current:	670-670 %
Cos phi - power factor:	0.89
Rated speed:	2975 rpm
Efficiency:	IE3 94,3%
Motor efficiency at full load:	94.3-94.3 %
Motor efficiency at 3/4 load:	94.5-94.5 %

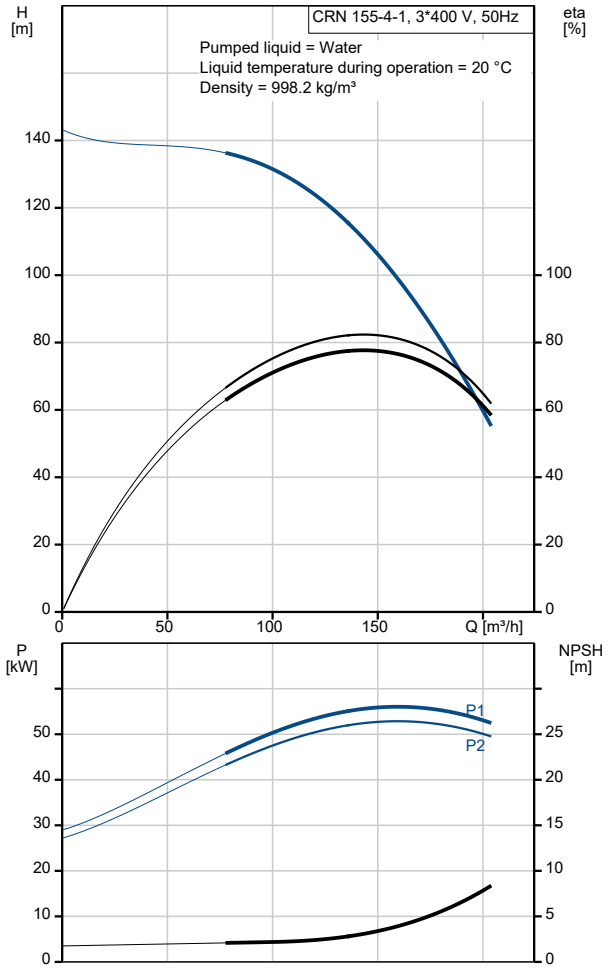

Description	Value
Motor efficiency at 1/2 load:	93.9-93.9 %
Number of poles:	2
Enclosure class (IEC 34-5):	IP55
Insulation class (IEC 85):	F
Motor protec:	PTC
Motor No:	81U15338
Controls:	
Frequency converter:	NONE
Others:	
Net weight:	637 kg
Gross weight:	780 kg
Shipping volume:	2.04 m^3
Finnish LVI No.:	4925644
Thrust handling device:	N
Country of origin:	DK
Custom tariff no.:	84137075

99143275 CRN 155-4-1 A-F-A-E-HQQE 50 Hz

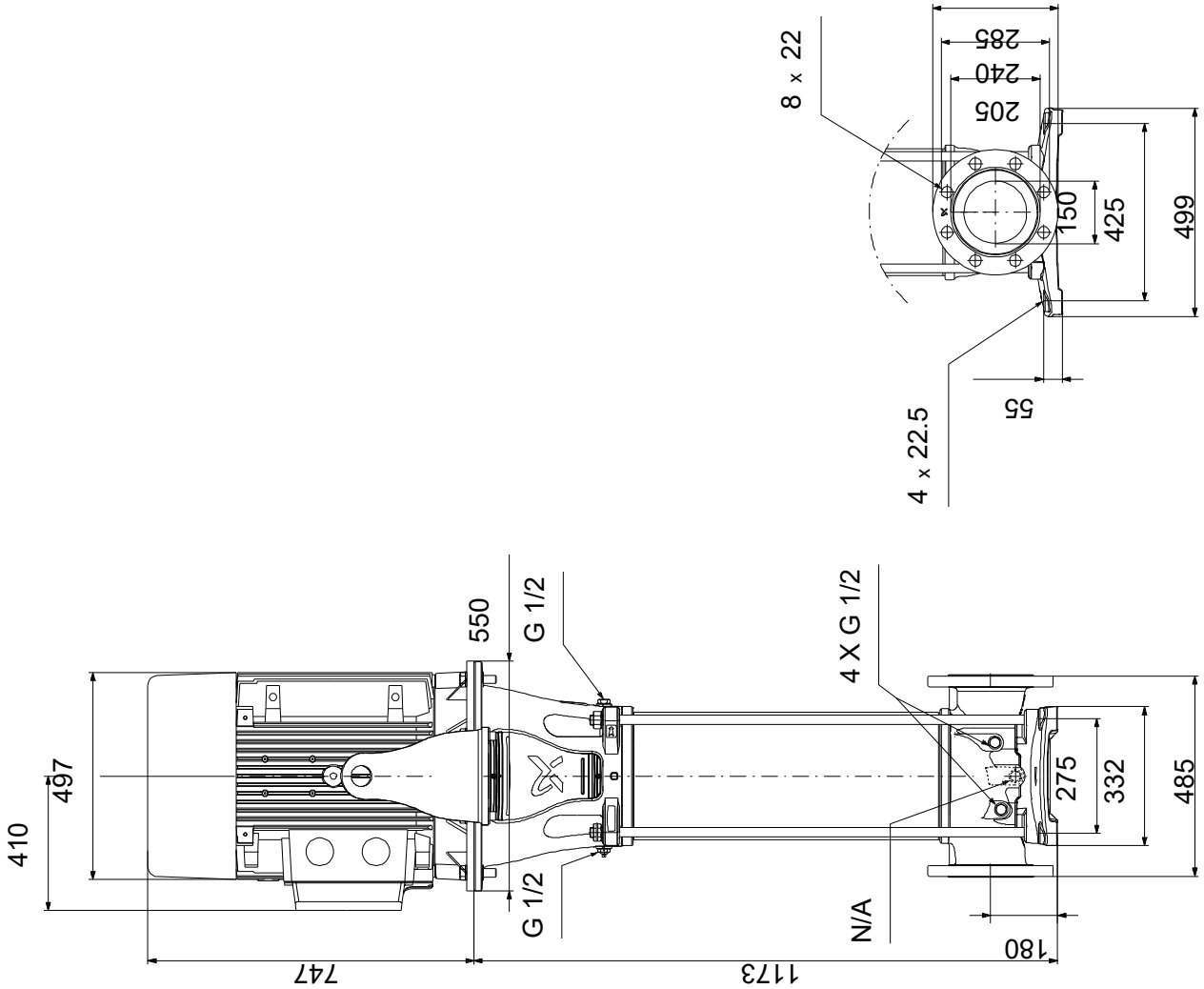

Note! All units are in [mm] unless others are stated.
Disclaimer: This simplified dimensional drawing does not show all details.

Spare parts CRN 155-4-1, Product No. 99143275
Produced After 1840 (production year and week number)

Pos	Omschrijving	Opmerking tekst	Classificatie Gegevens	Onderdeelnr.	Aantal	Eenheid
-	Kit, bearing			99415823	1	pcs
47g	Lock ring				1	
47a	Bearing				1	
48	Nut				1	
-	Kit, coupling			99190040	1	pcs
-	Coupling cpl.				1	
	Cable clip.				2	
10a	Coupling				1	
9	Hex socket head cap screw		Designation: DIN 912		4	
			Length (mm): 45			
			Thread: M16			
10	Parallel pin				1	
-	Kit, coupling guard			99196381	2	pcs
7b	Lock washer				2	
7a	Screw				2	
7	Coupling guard				1	
-	Kit, flange			99432761	1	pcs
440b	Retaining ring				1	
440a	Flange				1	
-	Kit, impeller,bearing			99432561	1	pcs
48	Nut				1	
49b	Split cone				1	
49	Impeller				1	
-	Kit, impeller,bush			99124961	2	pcs
48	Nut				1	
49b	Split cone				1	
49	Impeller				1	
-	Kit, impeller,red.bush			99124975	1	pcs
48	Nut				1	
49b	Split cone				1	
49a	Impeller				1	
-	Kit, O-rings			99262380	1	pcs
37	O-ring				2	
38	O-ring				8	
109	O-ring				1	
110	O-ring		Diameter: 21,5		1	
			Material type: EPDM			
			Thickness: 4,25			
-	Kit, plug			99262366	1	pcs
-	Plug cpl.				5	
25	Plug				1	
38	O-ring				1	
-	Air vent screw				1	
- 18	Air vent screw				1	
	Spindle					
	Plug					
38	O-ring				1	
-	Kit, shaft seal HQQE			99262346	1	pcs
	Grinding device				1	
105	Shaft seal				1	
-	Kit, staybolts			99190101	4	pcs
26	Staybolt				1	
36	Nut				1	
66a	Washer				1	
-	Kit, strap			99190061	2	pcs
26c	Washer		Designation: DIN 125A		1	
			Thickness: 1,6			
26b	Hex head screw				1	
26a	Strap				1	

	Pos	Omschrijving	Opmerking tekst	Classificatie Gegevens	Onderdeelnr.	Aantal	Eenheid
-		Kit, wear parts			99262419	1	pcs
		Adjusting fork				1	
	45	Neck ring				4	
	47d	Lock washer				3	
	47c	Bush				3	
	65	Neck ring retainer				4	
-		Motor				1	pcs
	156	Fan			96766619	1	
	151	Kit, fan cover			98062277	1	
	156b	Kit, flange			98062294	1	
		Kit, lubrication nipple			98062533	1	
	156a	Kit, ND-end shield cpl.			98062519	1	
	159b	Kit, seal ring			98062553	1	
	176	Kit, terminal board			98062239	1	
	164a	Kit, terminal box			98062264	1	
	2	Cover			99196497	1	pcs
+	3	Chamber			99262605	1	pcs
+	3	Chamber			99262663	1	pcs
+	3	Chamber			99196655	1	pcs
+	4a	Chamber			99446242	1	pcs
+	4a	Chamber			99446263	1	pcs
+	4a	Chamber			99415891	1	pcs
+	4	Chamber			99262601	2	pcs
+	4	Chamber			99262659	2	pcs
+	4	Chamber			99196651	2	pcs
	6	Base			99196473	1	pcs
	26c	Washer		Designation: DIN 125A	99262704	2	pcs
				Thickness: 1,6			
	26c	Washer		Designation: DIN 125A	99886930	2	pcs
				Thickness: 1,6			
	32	Washer		Designation: DIN 125 A	98923051	16	pcs
				Internal diameter: 17			
				Outer diameter: 30			
				Thickness: 3			
	36	Nut			99262693	4	pcs
	37	O-ring			99865786	2	pcs
+	44	Suction part			99196616	1	pcs
	44a	Discharge part			99196622	1	pcs
	48	Nut			99446217	1	pcs
	48	Nut			99262681	3	pcs
	48	Nut			99446219	1	pcs
	48	Nut			99262684	3	pcs
	49h	Impeller			99262545	1	pcs
	49	Impeller			99262533	3	pcs
	49h	Impeller			99262569	1	pcs
	49	Impeller			99262557	3	pcs
	49b	Split cone			99262687	4	pcs
	49b	Split cone			99262690	4	pcs
	51	Shaft			99196563	1	pcs
	55	Sleeve			99196442	1	pcs
	56	Base plate			99196488	1	pcs
	66a	Washer			99262700	4	pcs