Inventflow: Grundfos A-partner

Grundfos CRN 185-1 A-F-A-V-HQQV

Find the pump here:
https://inventflow.nl/en/pompenfilter/crn/grundfos-crn-185-1-a-f-a-v-hqqv

Contact

info@inventflow.nl
+31 (0) 546 45 80 72

Datasheet

Qty.	Description
1	**CRN 185-1 A-F-A-V-HQQV**

Note! Product picture may differ from actual product

Product No.: 99143752

Vertical, multistage centrifugal pump with inlet and outlet ports on same the level (inline). Pump materials in contact with the liquid are in high-grade stainless steel. The Grundfos cartridge shaft seal ensures high reliability, safe handling, and easy access and service. Power transmission is via a rigid split coupling. Pipe connection is via DIN flanges.

The pump is fitted with a 3-phase, fan-cooled asynchronous motor.

Liquid:

Pumped liquid:	Water
Liquid temperature range:	-20 .. 90 °C
Selected liquid temperature:	20 °C
Density:	998.2 kg/m³

Technical:

Pump speed on which pump data are based:	2961 rpm
Rated flow:	185 m³/h
Rated head:	34.1 m
Pump orientation:	Vertical
Shaft seal arrangement:	Single
Code for shaft seal:	HQQV
Approvals:	CE,EAC,UKCA,ACS,WRAS
Curve tolerance:	ISO9906:2012 3B

Materials:

Base:	Stainless steel EN 1.4408
Impeller:	Stainless steel EN 1.4401
Bearing:	WC/WC
Support bearing:	Graflon
Material certified according to:	European standards

Installation:

Maximum ambient temperature:	60 °C
Maximum operating pressure:	16 bar
Max pressure at stated temp:	16 bar / 90 °C
Type of connection:	DIN
Size of inlet connection:	DN 200
Size of outlet connection:	DN 200
Pressure rating for connection:	PN 16
Flange size for motor:	FF300

Electrical data:

Motor standard:	IEC
Motor type:	180MB
IE Efficiency class:	IE3

Qty.	Description	
	Rated power - P2:	22 kW
	Power (P2) required by pump:	22 kW
	Mains frequency:	50 Hz
	Rated voltage:	3 x 380-415D/660-690Y V
	Rated current:	39.5/22.8 A
	Starting current:	830 %
	Cos phi - power factor:	0.90-0.90
	Rated speed:	2950 rpm
	Efficiency:	IE3 92,7%
	Motor efficiency at full load:	92.7-92.7 %
	Motor efficiency at 3/4 load:	93.7 %
	Motor efficiency at 1/2 load:	94.4 %
	Number of poles:	2
	Enclosure class (IEC 34-5):	55 Dust/Jetting
	Insulation class (IEC 85):	F
	Motor No:	85U17530
	Controls:	
	Frequency converter:	NONE
	Others:	
	Net weight:	360 kg
	Gross weight:	481 kg
	Shipping volume:	1.25 m³
	Thrust handling device:	N
	Country of origin:	DK
	Custom tariff no.:	84137075

99143752 CRN 185-1 A-F-A-V-HQQV 50 Hz

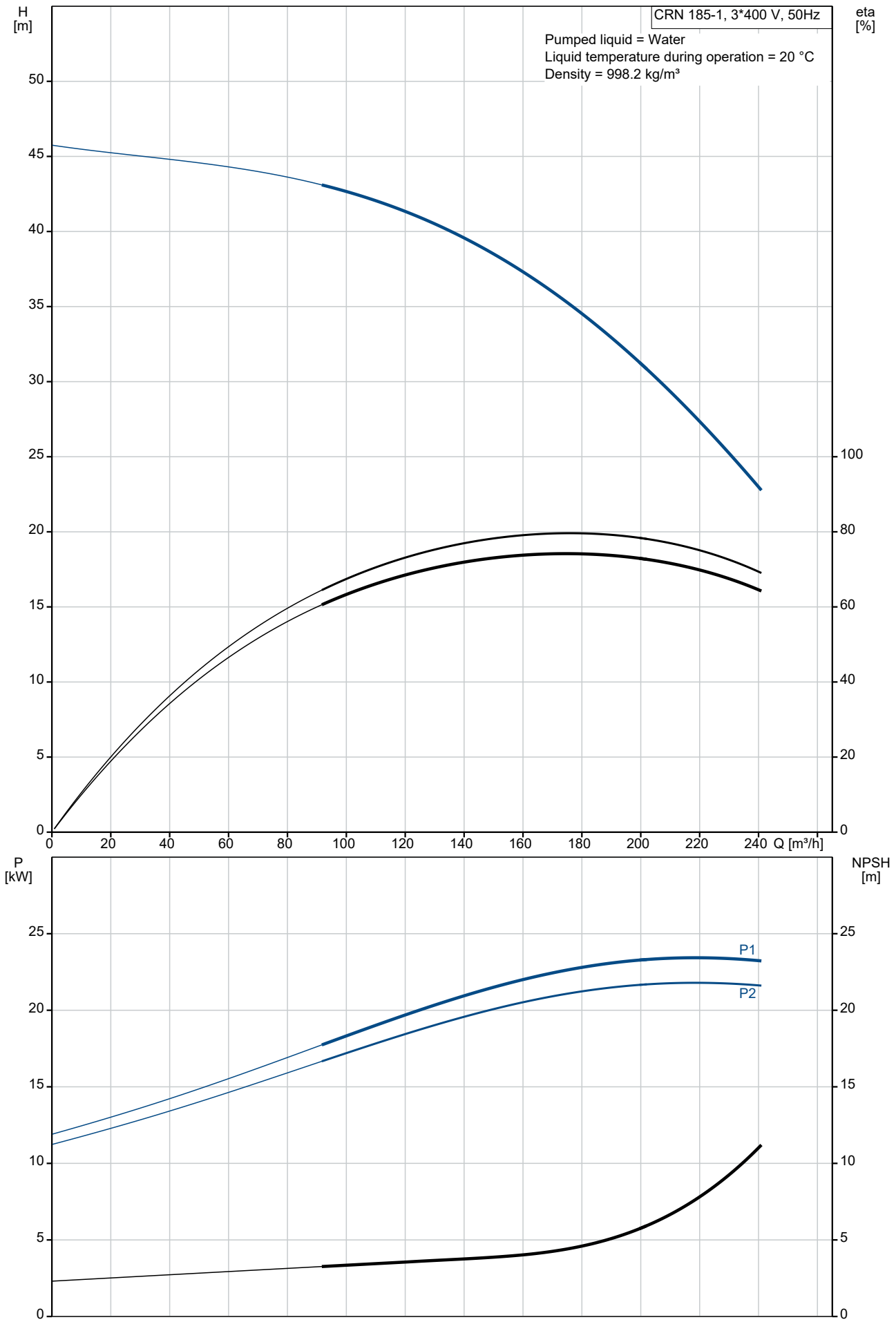

Description	Value
General information:	
Product name:	CRN 185-1 A-F-A-V-HQQV
Product No:	99143752
EAN number:	5712607562328
Technical:	
Pump speed on which pump data are based:	2961 rpm
Rated flow:	185 m³/h
Rated head:	34.1 m
Maximum head:	45.8 m
Stages:	1
Impellers:	1
Low NPSH:	N
Pump orientation:	Vertical
Shaft seal arrangement:	Single
Code for shaft seal:	HQQV
Approvals:	CE,EAC,UKCA,ACS,WRAS
Curve tolerance:	ISO9906:2012 3B
Pump version:	A
Model:	A
Cooling:	IC 411
Materials:	
Base:	Stainless steel
Base:	EN 1.4408
Impeller:	Stainless steel
Impeller:	EN 1.4401
Material code:	A
Code for rubber:	V
Bearing:	WC/WC
Support bearing:	Graflon
Material certified according to:	European standards
Installation:	
Maximum ambient temperature:	60 °C
Maximum operating pressure:	16 bar
Max pressure at stated temp:	16 bar / 90 °C
Type of connection:	DIN
Size of inlet connection:	DN 200
Size of outlet connection:	DN 200
Pressure rating for connection:	PN 16
Flange size for motor:	FF300
Connect code:	F
Liquid:	
Pumped liquid:	Water
Liquid temperature range:	-20 .. 90 °C
Selected liquid temperature:	20 °C
Density:	998.2 kg/m³
Electrical data:	
Motor standard:	IEC
Motor type:	180MB
IE Efficiency class:	IE3
Rated power - P2:	22 kW
Power (P2) required by pump:	22 kW
Mains frequency:	50 Hz
Rated voltage:	3 x 380-415D/660-690Y V
Rated current:	39.5/22.8 A
Starting current:	830 %
Cos phi - power factor:	0.90-0.90
Rated speed:	2950 rpm
Efficiency:	IE3 92,7%
Motor efficiency at full load:	92.7-92.7 %
Motor efficiency at 3/4 load:	93.7 %
Motor efficiency at 1/2 load:	94.4 %

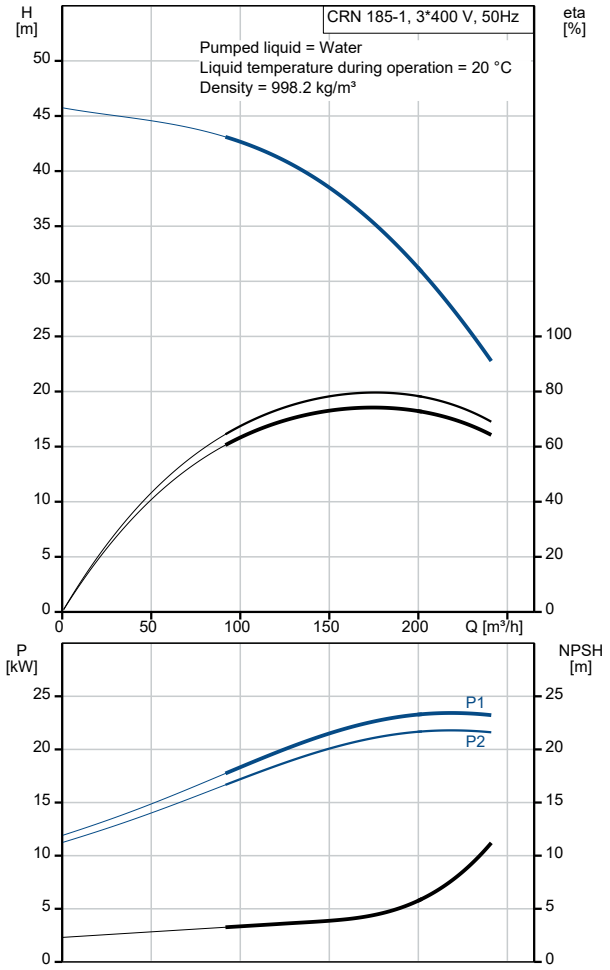

Description	Value
Number of poles:	2
Enclosure class (IEC 34-5):	55 Dust/Jetting
Insulation class (IEC 85):	F
Motor protec:	PTC
Motor No:	85U17530
Controls:	
Frequency converter:	NONE
Others:	
Net weight:	360 kg
Gross weight:	481 kg
Shipping volume:	1.25 m³
Thrust handling device:	N
Country of origin:	DK
Custom tariff no.:	84137075

99143752 CRN 185-1 A-F-A-V-HQQV 50 Hz

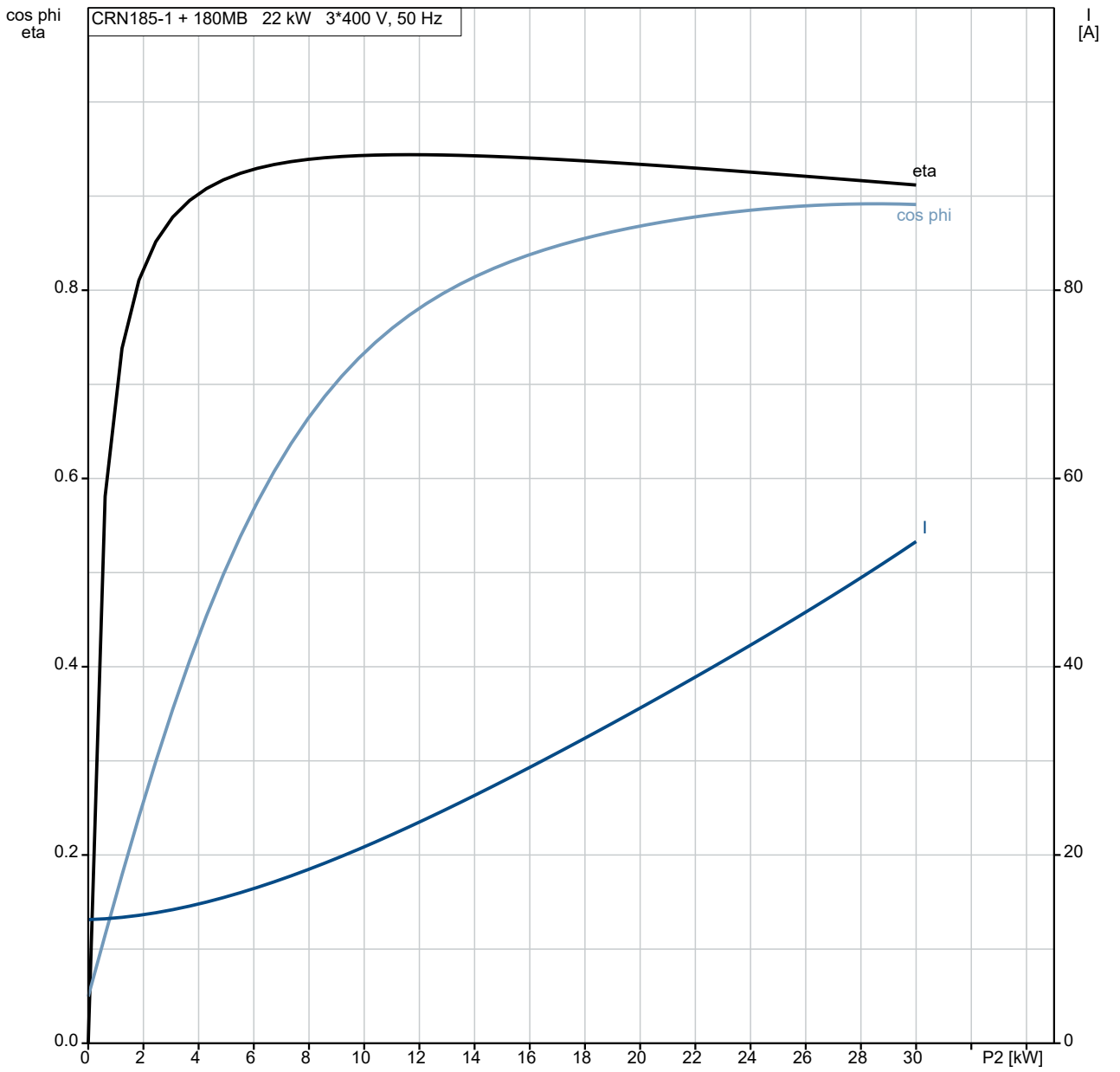

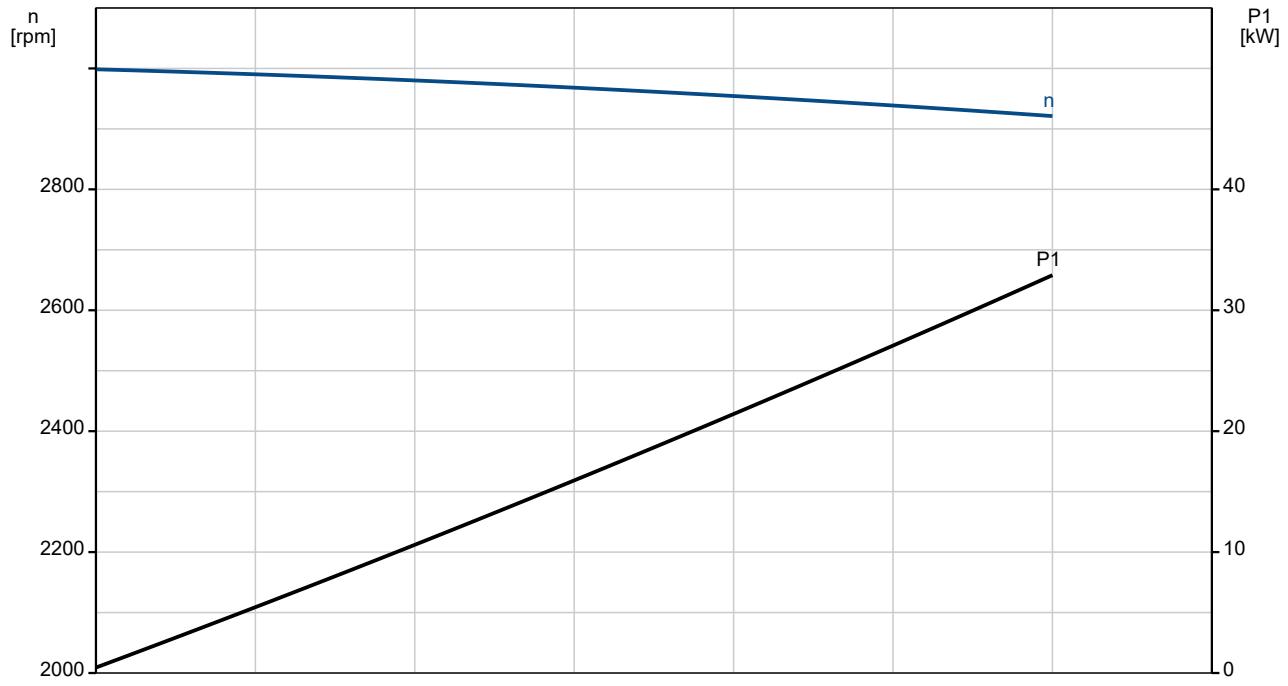

99143752 CRN 185-1 A-F-A-V-HQQV 50 Hz

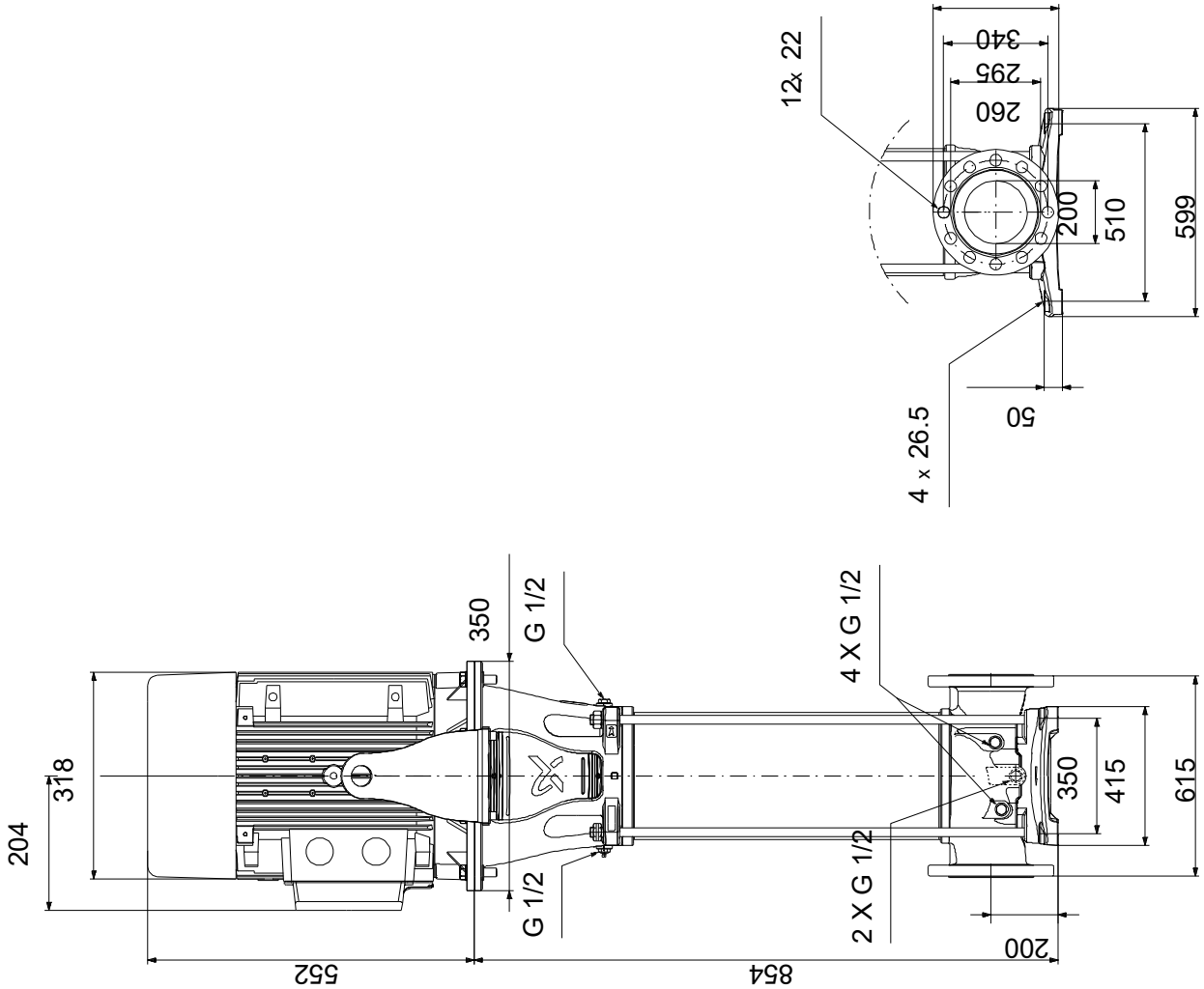

Note! All units are in [mm] unless others are stated.
Disclaimer: This simplified dimensional drawing does not show all details.

Spare parts CRN 185-1, Product No. 99143752
Produced After 2040 (production year and week number)

Pos	Omschrijving	Opmerking tekst	Classificatie Gegevens	Onderdeelnr.	Aantal	Eenheid
-	Kit, bearing			99415824	1	pcs
47g	Lock ring				1	
47a	Bearing				1	
48a	Nut				1	
-	Kit, coupling			99190038	1	pcs
- 7	Coupling cpl.				1	
10a	Coupling					2
9	Hex socket head cap screw		Designation: DIN 912		4	
			Length (mm): 25			
			Thread: M10			
10	Parallel pin				1	
-	Kit, coupling guard			99196379	2	pcs
7b	Lock washer				2	
7a	Screw				2	
7	Coupling guard				1	
-	Kit, flange			99432766	1	pcs
440b	Retaining ring				1	
440a	Flange				1	
-	Kit, impeller,bearing			99432573	1	pcs
48	Nut				1	
49b	Split cone				1	
49	Impeller				1	
-	Kit, O-rings			99262383	1	pcs
37	O-ring				2	
38	O-ring		Diameter: 16,3		8	
			Material type: FKM			
			Thickness: 2,4			
109	O-ring				1	
110	O-ring		Diameter: 21,5		1	
			Thickness: 4,25			
-	Kit, plug			99262371	1	pcs
-	Plug				7	
25	Plug					1
38	O-ring		Diameter: 16,3			1
			Material type: FKM			
			Thickness: 2,4			
-	Air vent screw				1	
- 18	Air vent screw					1
	Spindle					
	Plug					
38	O-ring		Diameter: 16,3			1
			Material type: FKM			
			Thickness: 2,4			
-	Kit, shaft seal HQQV			99262347	1	pcs
	Grinding device				1	
105	Shaft seal				1	
-	Kit, staybolts			99190117	4	pcs
26	Staybolt				1	
36	Nut				1	
66a	Washer				1	
-	Kit, strap			99190058	2	pcs
26c	Washer		Designation: DIN 125A		1	
			Thickness: 1,6			
26b	Hex head screw				1	
26a	Strap				1	
-	Kit, wear parts			99262421	1	pcs
	Adjusting fork				1	
45	Neck ring				4	
47d	Lock washer				3	

	Pos	Omschrijving	Opmerking tekst	Classificatie Gegevens	Onderdeelnr.	Aantal	Eenheid
	47c	Bush				3	
	65	Neck ring retainer				4	
-		Motor				1	pcs
-		Kit, bearing cpl.			96796812	1	
	153	Angular-contact bearing		Designation: 7310B			1
	154	Ball bearing					1
	158	Waved washer					2
	159	V-ring					1
-		Kit, bearing plate			96796809	1	
	155.a	Cover					1
	208a	Gasket					3
	208	Hex socket head cap screw		Designation: DIN912			3
				Length (mm): 40			
				Thread: M5			
-		Kit, eyebolt			96796712	1	
	189	Eyebolt					2
-		Kit, fan			96796650	1	
	156.c	Retaining ring					1
	156	Fan					1
-		Kit, fan cover			96796647	1	
	151	Fan cover					1
	152.a	Rubber bush					4
	152	Hex head cap screw					4
	196	Diaphragm					1
-		Kit, flange			96796807	1	
	156.b	Flange					1
	159.b	Seal ring					1
	185	Hex socket head cap screw					4
	186	Drain plug					4
	195.a	Grease nipple					1
-		Kit, gaskets			96798508	1	
	184	O-ring		Diameter: 235			2
-		Kit, lubrication nipple			96796671	1	
	195.b	Grease nipple					2
	195.a	Grease nipple					1
-		Kit, ND-end shield cpl.			96796810	1	
	156a	End shield NDE					1
	158	Waved washer					1
	159	V-ring					1
	185.c	Nut					4
	185.a	Hex socket head cap screw					4
	195.b	Grease nipple					1
-		Kit, shaft seal			96843460	1	
	159.b	V-ring					1
	159	V-ring					1
-		Kit, terminal board			96796657	1	
		Terminal connection					3
		Washer					12
	36	Hex nut					12
	173	Torx Screw					1
	176.d	Terminal board					1
	176	Terminal board					1
	177	Torx Screw					1
-		Kit, terminal box cover			96796659	1	
	164	Terminal box cover					1
	273a	Pan head thread forming screw					4
	2	Cover			99196501	1	pcs
+	3a	Chamber			99446247	1	pcs
+	3a	Chamber			99446268	1	pcs
+	3a	Chamber			99415896	1	pcs
	6	Base			99445742	1	pcs
	26c	Washer		Designation: DIN 125A	99262704	2	pcs
				Thickness: 1,6			
	26c	Washer		Designation: DIN 125A	99886930	2	pcs

	Pos	Omschrijving	Opmerking tekst	Classificatie Gegevens	Onderdeelnr.	Aantal	Eenheid
				Thickness: 1,6			
	28a	Hex head screw			96620478	4	pcs
	32	Washer		Designation: DIN 125 A	98923051	8	pcs
				Internal diameter: 17			
				Outer diameter: 30			
				Thickness: 3			
	36	Nut			99262695	4	pcs
+	44	Suction part			99196617	1	pcs
	44a	Discharge part			99196623	1	pcs
	48	Nut			99446218	1	pcs
	48	Nut			99446220	1	pcs
	49	Impeller			99262535	1	pcs
	49	Impeller			99262559	1	pcs
	49b	Split cone			99262688	1	pcs
	49b	Split cone			99262691	1	pcs
	51	Shaft			99196587	1	pcs
	56	Base plate			99196491	1	pcs
	66a	Washer			99262698	4	pcs