# Inventflow: Grundfos A-partner

## Grundfos CRN 185-1-1 A-P-A-E-HQQE

Find the pump here:
https://inventflow.nl/en/pompenfilter/crn/grundfos-crn-185-1-1-a-p-a-e-hqqe

### Contact

info@inventflow.nl
+31 (0) 546 45 80 72

### Datasheet

| Qty. | Description |
|---|---|
| 1 | **CRN 185-1-1 A-P-A-E-HQQE** |

**Note! Product picture may differ from actual product**

Product No.: 99143767

Vertical, multistage centrifugal pump with inlet and outlet ports on same the level (inline). Pump materials in contact with the liquid are in high-grade stainless steel. The Grundfos cartridge shaft seal ensures high reliability, safe handling, and easy access and service. Power transmission is via a rigid split coupling. Pipe connection is via PJE (Victaulic®) couplings.

The pump is fitted with a 3-phase, fan-cooled asynchronous motor.

Liquid:

| | |
|---|---|
| Pumped liquid: | Water |
| Liquid temperature range: | -40 .. 120 °C |
| Selected liquid temperature: | 20 °C |
| Density: | 998.2 kg/m³ |

Technical:

| | |
|---|---|
| Pump speed on which pump data are based: | 2951 rpm |
| Rated flow: | 185 m³/h |
| Rated head: | 28.1 m |
| Pump orientation: | Vertical |
| Shaft seal arrangement: | Single |
| Code for shaft seal: | HQQE |
| Approvals: | CE,EAC,UKCA,ACS,WRAS |
| Curve tolerance: | ISO9906:2012 3B |

Materials:

| | |
|---|---|
| Base: | Stainless steel<br>EN 1.4408 |
| Impeller: | Stainless steel<br>EN 1.4401 |
| Bearing: | WC/WC |
| Support bearing: | Graflon |
| Material certified according to: | European standards |

Installation:

| | |
|---|---|
| Maximum ambient temperature: | 60 °C |
| Maximum operating pressure: | 16 bar |
| Max pressure at stated temp: | 16 bar / 120 °C |
| Type of connection: | PJE |
| Size of inlet connection: | DN 200 |
| Size of outlet connection: | DN 200 |
| Pressure rating for connection: | 55 bar |
| Flange size for motor: | FF300 |

Electrical data:

| | |
|---|---|
| Motor standard: | IEC |
| Motor type: | 160LB |
| IE Efficiency class: | IE3 |

| Qty. | Description | |
|---|---|---|
| | Rated power - P2: | 18.5 kW |
| | Power (P2) required by pump: | 18.5 kW |
| | Mains frequency: | 50 Hz |
| | Rated voltage: | 3 x 380-415D/660-690Y V |
| | Rated current: | 34,5-32,5/20,0-18,8 A |
| | Starting current: | 830-980 % |
| | Cos phi - power factor: | 0.89-0.85 |
| | Rated speed: | 2940-2950 rpm |
| | Efficiency: | IE3 92,4% |
| | Motor efficiency at full load: | 92.4-92.4 % |
| | Motor efficiency at 3/4 load: | 93.2 % |
| | Motor efficiency at 1/2 load: | 93.2 % |
| | Number of poles: | 2 |
| | Enclosure class (IEC 34-5): | 55 Dust/Jetting |
| | Insulation class (IEC 85): | F |
| | Motor No: | 85U17528 |
| | | |
| | Controls: | |
| | Frequency converter: | NONE |
| | | |
| | Others: | |
| | Net weight: | 329 kg |
| | Gross weight: | 451 kg |
| | Shipping volume: | 1.25 m³ |
| | Thrust handling device: | N |
| | Country of origin: | DK |
| | Custom tariff no.: | 84137075 |

# 99143767 CRN 185-1-1 A-P-A-E-HQQE 50 Hz

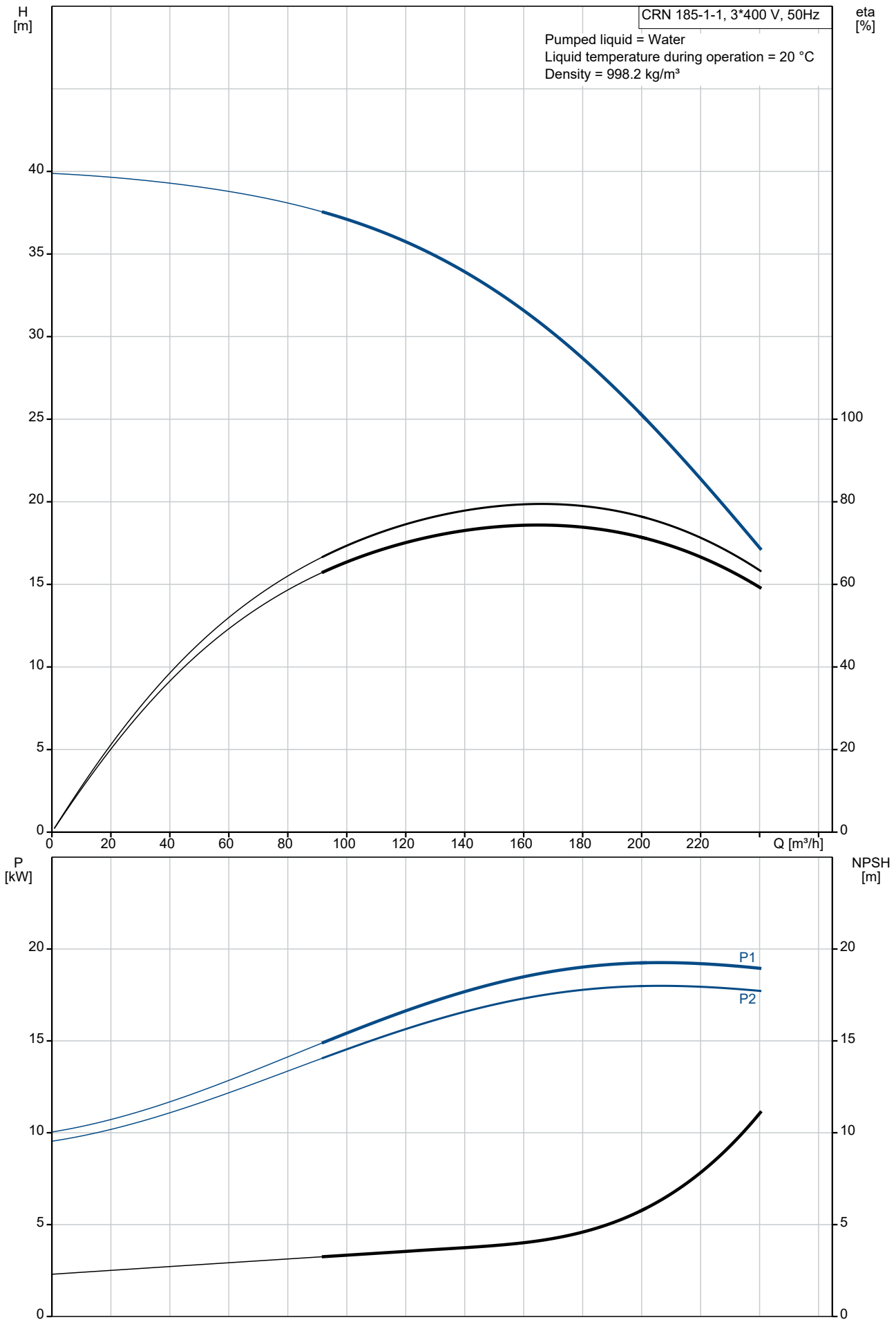

| Description | Value |
|---|---|
| **General information:** | |
| Product name: | CRN 185-1-1 A-P-A-E-HQQE |
| Product No: | 99143767 |
| EAN number: | 5712607562625 |
| **Technical:** | |
| Pump speed on which pump data are based: | 2951 rpm |
| Rated flow: | 185 m³/h |
| Rated head: | 28.1 m |
| Maximum head: | 39.9 m |
| Stages: | 1 |
| Impellers: | 1 |
| Number of reduced-diameter impellers: | 1 |
| Low NPSH: | N |
| Pump orientation: | Vertical |
| Shaft seal arrangement: | Single |
| Code for shaft seal: | HQQE |
| Approvals: | CE,EAC,UKCA,ACS,WRAS |
| Curve tolerance: | ISO9906:2012 3B |
| Pump version: | A |
| Model: | A |
| Cooling: | IC 411 |
| **Materials:** | |
| Base: | Stainless steel |
| Base: | EN 1.4408 |
| Impeller: | Stainless steel |
| Impeller: | EN 1.4401 |
| Material code: | A |
| Code for rubber: | E |
| Bearing: | WC/WC |
| Support bearing: | Graflon |
| Material certified according to: | European standards |
| **Installation:** | |
| Maximum ambient temperature: | 60 °C |
| Maximum operating pressure: | 16 bar |
| Max pressure at stated temp: | 16 bar / 120 °C |
| Type of connection: | PJE |
| Size of inlet connection: | DN 200 |
| Size of outlet connection: | DN 200 |
| Pressure rating for connection: | 55 bar |
| Flange size for motor: | FF300 |
| Connect code: | P |
| **Liquid:** | |
| Pumped liquid: | Water |
| Liquid temperature range: | -40 .. 120 °C |
| Selected liquid temperature: | 20 °C |
| Density: | 998.2 kg/m³ |
| **Electrical data:** | |
| Motor standard: | IEC |
| Motor type: | 160LB |
| IE Efficiency class: | IE3 |
| Rated power - P2: | 18.5 kW |
| Power (P2) required by pump: | 18.5 kW |
| Mains frequency: | 50 Hz |
| Rated voltage: | 3 x 380-415D/660-690Y V |
| Rated current: | 34,5-32,5/20,0-18,8 A |
| Starting current: | 830-980 % |
| Cos phi - power factor: | 0.89-0.85 |
| Rated speed: | 2940-2950 rpm |
| Efficiency: | IE3 92,4% |
| Motor efficiency at full load: | 92.4-92.4 % |
| Motor efficiency at 3/4 load: | 93.2 % |

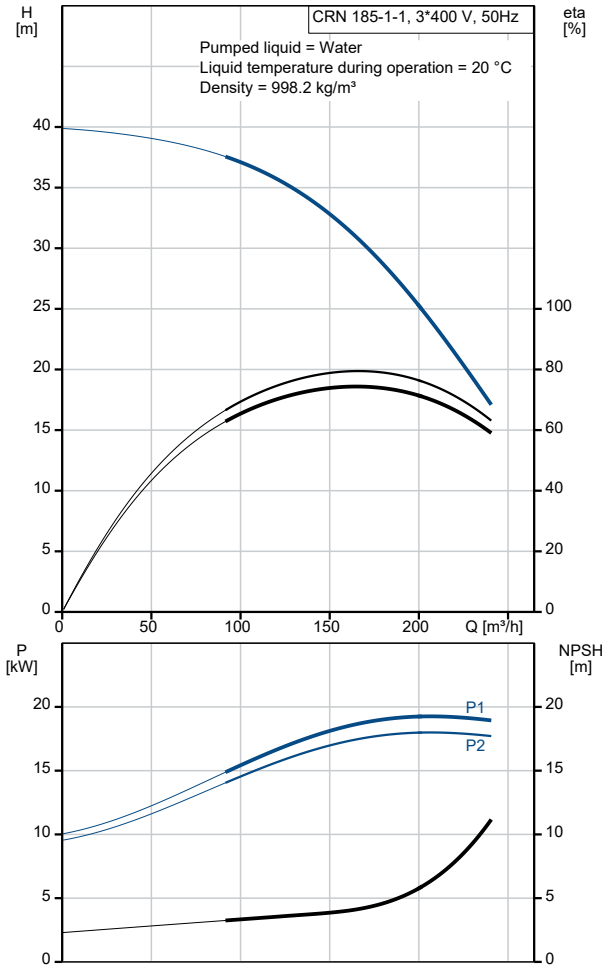

| Description | Value |
|---|---|
| Motor efficiency at 1/2 load: | 93.2 % |
| Number of poles: | 2 |
| Enclosure class (IEC 34-5): | 55  Dust/Jetting |
| Insulation class (IEC 85): | F |
| Motor protec: | PTC |
| Motor No: | 85U17528 |
| **Controls:** | |
| Frequency converter: | NONE |
| **Others:** | |
| Net weight: | 329 kg |
| Gross weight: | 451 kg |
| Shipping volume: | 1.25 $m^3$ |
| Thrust handling device: | N |
| Country of origin: | DK |
| Custom tariff no.: | 84137075 |

# 99143767 CRN 185-1-1 A-P-A-E-HQQE 50 Hz

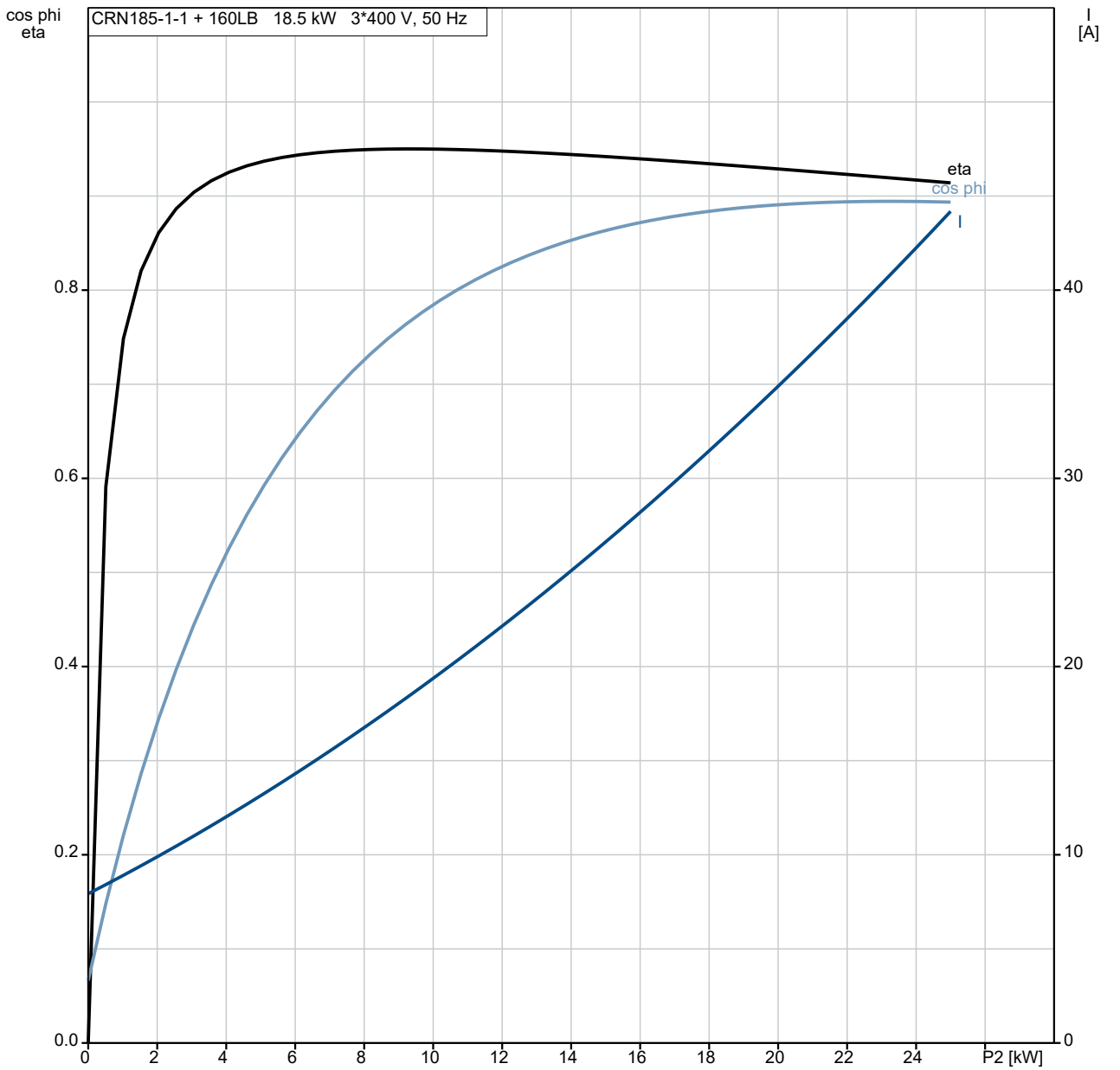


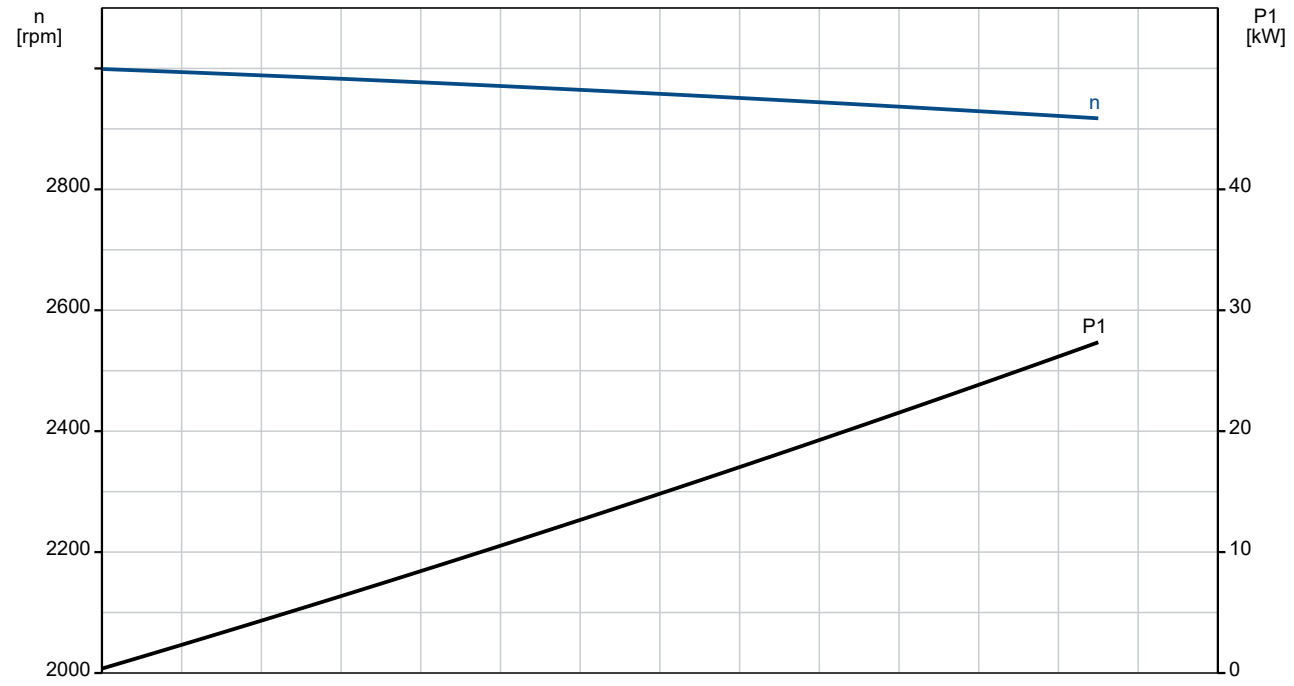

# 99143767 CRN 185-1-1 A-P-A-E-HQQE 50 Hz

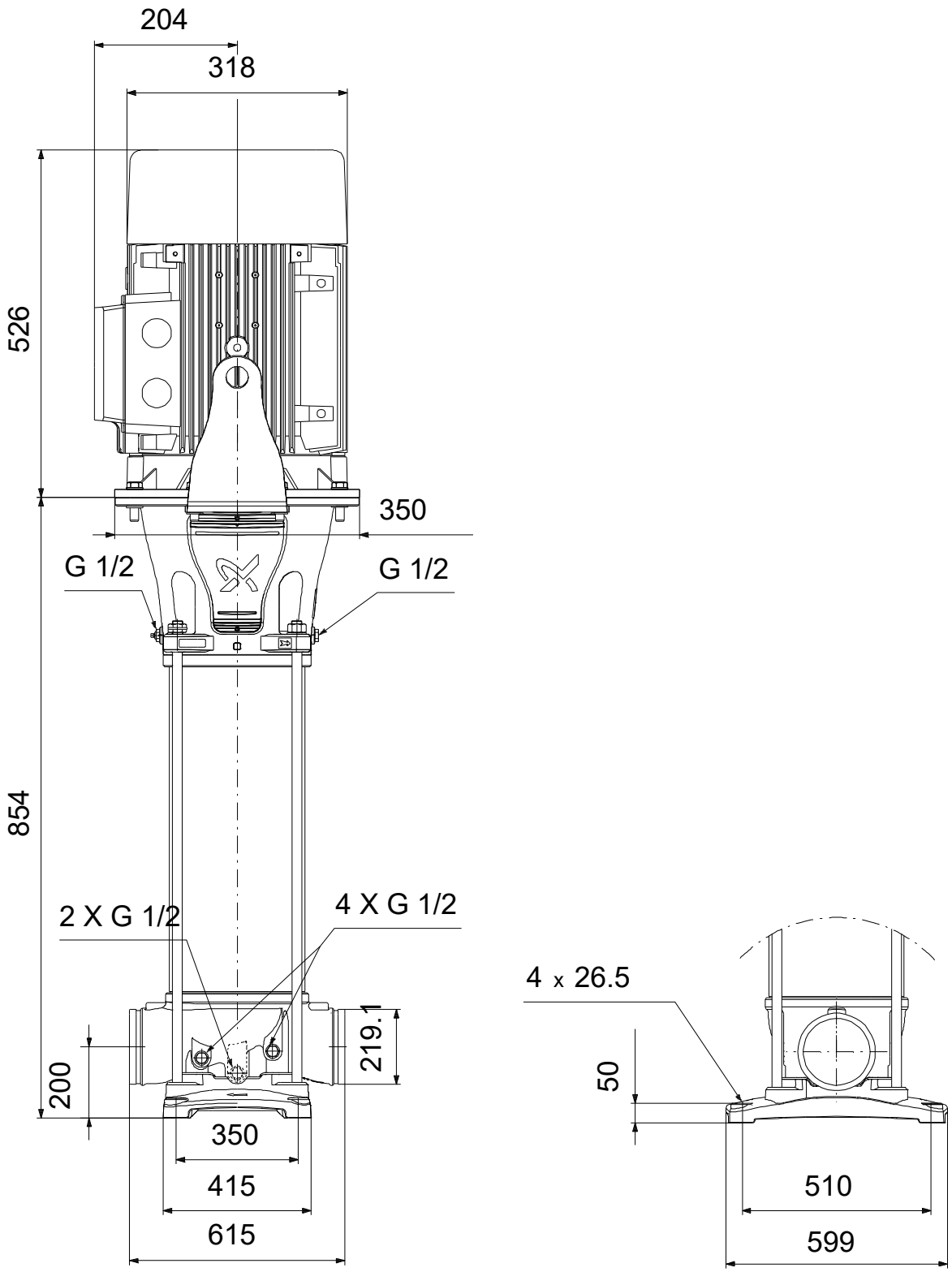


Note! All units are in [mm] unless others are stated.
Disclaimer: This simplified dimensional drawing does not show all details.

# Spare parts CRN 185-1-1, Product No. 99143767
# Produced After 2040 (production year and week number)

| Pos | Omschrijving | Opmerking tekst | Classificatie Gegevens | Onderdeelnr. | Aantal | Eenheid |
|---|---|---|---|---|---|---|
| - | Kit, bearing | | | 99415824 | 1 | pcs |
| 47g | Lock ring | | | | 1 | |
| 47a | Bearing | | | | 1 | |
| 48a | Nut | | | | 1 | |
| - | Kit, coupling | | | 99190035 | 1 | pcs |
| - 7 | Coupling cpl. | | | | 1 | |
| 10a | Coupling | | | | | 2 |
| 9 | Hex socket head cap screw | | Designation: DIN 912 | | 4 | |
| | | | Length (mm): 25 | | | |
| | | | Thread: M10 | | | |
| 10 | Parallel pin | | | | 1 | |
| - | Kit, coupling guard | | | 99196379 | 2 | pcs |
| 7b | Lock washer | | | | 2 | |
| 7a | Screw | | | | 2 | |
| 7 | Coupling guard | | | | 1 | |
| - | Kit, impeller,red.bearing | | | 99432583 | 1 | pcs |
| 48 | Nut | | | | 1 | |
| 49b | Split cone | | | | 1 | |
| 49a | Impeller | | | | 1 | |
| - | Kit, O-rings | | | 99262382 | 1 | pcs |
| 37 | O-ring | | | | 2 | |
| 38 | O-ring | | | | 8 | |
| 109 | O-ring | | | | 1 | |
| 110 | O-ring | | Diameter: 21,5 | | 1 | |
| | | | Material type: EPDM | | | |
| | | | Thickness: 4,25 | | | |
| - | Kit, plug | | | 99262370 | 1 | pcs |
| - | Plug cpl. | | | | 7 | |
| 25 | Plug | | | | | 1 |
| 38 | O-ring | | | | | 1 |
| - | Air vent screw | | | | 1 | |
| - 18 | Air vent screw | | | | | 1 |
| | Spindle | | | | | |
| | Plug | | | | | |
| 38 | O-ring | | | | | 1 |
| - | Kit, shaft seal HQQE | | | 99262346 | 1 | pcs |
| | Grinding device | | | | 1 | |
| 105 | Shaft seal | | | | 1 | |
| - | Kit, staybolts | | | 99190117 | 4 | pcs |
| 26 | Staybolt | | | | 1 | |
| 36 | Nut | | | | 1 | |
| 66a | Washer | | | | 1 | |
| - | Kit, strap | | | 99190058 | 2 | pcs |
| 26c | Washer | | Designation: DIN 125A | | 1 | |
| | | | Thickness: 1,6 | | | |
| 26b | Hex head screw | | | | 1 | |
| 26a | Strap | | | | 1 | |
| - | Kit, wear parts | | | 99262421 | 1 | pcs |
| | Adjusting fork | | | | 1 | |
| 45 | Neck ring | | | | 4 | |
| 47d | Lock washer | | | | 3 | |
| 47c | Bush | | | | 3 | |
| 65 | Neck ring retainer | | | | 4 | |
| - | Motor | | | | 1 | pcs |
| - | Kit, bearing cpl. | | | 96796676 | 1 | |
| 32b | Waved washer | | | | | 2 |
| 153 | Angular-contact bearing | | | | | 1 |
| 154 | Ball bearing | | | | | 1 |
| 157 | O-ring | | | | | 1 |

| Pos | Omschrijving | Opmerking tekst | Classificatie Gegevens | Onderdeelnr. | Aantal | Eenheid |
|---|---|---|---|---|---|---|
| 159 | V-ring | | | | | 1 |
| - | Kit, bearing plate | | | 96796664 | 1 | |
| 155.a | Bearing cover | | | | | 1 |
| 208a | Gasket | | | | | 3 |
| 208 | Hex socket head cap screw | | Designation: DIN912 | | | 3 |
| | | | Length (mm): 40 | | | |
| | | | Thread: M5 | | | |
| - | Kit, eyebolt | | | 96796712 | 1 | |
| 189 | Eyebolt | | | | | 2 |
| - | Kit, fan | | | 96796654 | 1 | |
| 156.c | Retaining ring | | | | | 1 |
| 156 | Fan | | | | | 1 |
| - | Kit, fan cover | | | 96796647 | 1 | |
| 151 | Fan cover | | | | | 1 |
| 152.a | Rubber bush | | | | | 4 |
| 152 | Hex head cap screw | | | | | 4 |
| 196 | Diaphragm | | | | | 1 |
| - | Kit, flange | | | 96796662 | 1 | |
| 156.b | Flange | | | | | 1 |
| 159.b | Seal ring | | | | | 1 |
| 185.b | Nut | | | | | 4 |
| 185 | Hex socket head cap screw | | | | | 4 |
| 186 | Drain plug | | | | | 4 |
| 195.a | Grease nipple | | | | | 1 |
| - | Kit, gaskets | | | 96798508 | 1 | |
| 184 | O-ring | | Diameter: 235 | | | 2 |
| - | Kit, lubrication nipple | | | 96796671 | 1 | |
| 195.b | Grease nipple | | | | | 2 |
| 195.a | Grease nipple | | | | | 1 |
| - | Kit, ND-end shield cpl. | | | 96796669 | 1 | |
| 32b | Waved washer | | | | | 1 |
| 156.a | End shield NDE | | | | | 1 |
| 157 | O-ring | | | | | 1 |
| 159 | V-ring | | | | | 1 |
| 185.c | Nut | | | | | 4 |
| 185.a | Hex socket head cap screw | | | | | 4 |
| 195.b | Grease nipple | | | | | 1 |
| - | Kit, shaft seal | | | 96843459 | 1 | |
| 159.b | V-ring | | | | | 1 |
| 159 | V-ring | | | | | 1 |
| - | Kit, terminal board | | | 96796657 | 1 | |
| | Terminal connection | | | | | 3 |
| | Washer | | | | | 12 |
| 36 | Hex nut | | | | | 12 |
| 173 | Torx Screw | | | | | 1 |
| 176.d | Terminal board | | | | | 1 |
| 176 | Terminal board | | | | | 1 |
| 177 | Torx Screw | | | | | 1 |
| - | Kit, terminal box cover | | | 96796659 | 1 | |
| 164 | Terminal box cover | | | | | 1 |
| 273a | Pan head thread forming screw | | | | | 4 |
| 2 | Cover | | | 99196501 | 1 | pcs |
| + 3a | Chamber | | | 99446247 | 1 | pcs |
| + 3a | Chamber | | | 99446268 | 1 | pcs |
| + 3a | Chamber | | | 99415896 | 1 | pcs |
| 6 | Base | | | 99445743 | 1 | pcs |
| 26c | Washer | | Designation: DIN 125A | 99262704 | 2 | pcs |
| | | | Thickness: 1,6 | | | |
| 26c | Washer | | Designation: DIN 125A | 99886930 | 2 | pcs |
| | | | Thickness: 1,6 | | | |
| 28a | Hex head screw | | | 96620478 | 4 | pcs |
| 32 | Washer | | Designation: DIN 125 A | 98923051 | 8 | pcs |
| | | | Internal diameter: 17 | | | |
| | | | Outer diameter: 30 | | | |

| | Pos | Omschrijving | Opmerking tekst | Classificatie Gegevens | Onderdeelnr. | Aantal | Eenheid |
|---|---|---|---|---|---|---|---|
| | | | | Thickness: 3 | | | |
| | 36 | Nut | | | 99262695 | 4 | pcs |
| + | 44 | Suction part | | | 99196617 | 1 | pcs |
| | 44a | Discharge part | | | 99196623 | 1 | pcs |
| | 48 | Nut | | | 99446218 | 1 | pcs |
| | 48 | Nut | | | 99446220 | 1 | pcs |
| | 49a | Impeller | | | 99262547 | 1 | pcs |
| | 49a | Impeller | | | 99262571 | 1 | pcs |
| | 49b | Split cone | | | 99262688 | 1 | pcs |
| | 49b | Split cone | | | 99262691 | 1 | pcs |
| | 51 | Shaft | | | 99196587 | 1 | pcs |
| | 56 | Base plate | | | 99196491 | 1 | pcs |
| | 66a | Washer | | | 99262698 | 4 | pcs |