Inventflow: Grundfos A-partner

Grundfos TPE 125-340/4 NC-A-F-A-BQQE-QX3

Find the pump here:
https://inventflow.nl/en/pompenfilter/tpe/grundfos-tpe-125-340-4-nc-a-f-a-bqqe-qx3

Contact

info@inventflow.nl
+31 (0) 546 45 80 72

Datasheet

Qty.	Description
1	**TPE 125-340/4 NC-A-F-A-BQQE-QX3**

Note! Product picture may differ from actual product

Product No.: 99473945

Single-stage, close-coupled, volute pump with in-line suction and discharge ports of identical diameter.
The pump is of the top-pull-out design, i.e.
the power head (motor, pump head and impeller) can be removed for maintenance or service while the pump housing remains in the pipework.
The pump is fitted with an unbalanced rubber bellows seal.
The shaft seal is according to EN 12756.
Flange standard: Pipework connection is via PN 16 DIN flanges (EN 1092-2 and ISO 7005-2).
The pump is fitted with a fan-cooled asynchronous motor.
The pump includes a frequency converter and PI controller.
This enables continuously variable control of the motor speed, which again enables adaptation of the performance to a given requirement.

Controls:

VFD product number:	99448797
Frequency converter:	Built-in
Type of frequency converter:	CUE 3X380-500V IP55 RUG 22KW
Appr. for VFD:	CE, CULUS, C-TICK

Liquid:

Pumped liquid:	Water
Liquid temperature range:	-25 .. 120 °C
Selected liquid temperature:	20 °C
Density:	998.2 kg/m³

Technical:

Pump speed on which pump data are based:	1470 rpm
Rated flow:	191 m³/h
Rated head:	30.9 m
Actual impeller diameter:	312 mm
Code for shaft seal:	BQQE
Curve tolerance:	ISO9906:2012 3B

Materials:

Pump housing:	Cast iron EN-GJL-250 ASTM class 35
Impeller:	Cast iron EN-GJL-200

Qty.	Description	
		ASTM class 30
	Installation:	
	Range of ambient temperature:	-20 .. 55 °C
	Maximum operating pressure:	16 bar
	Max pressure at stated temp:	16 bar / 120 °C
	Type of connection:	DIN
	Size of connection:	DN 125
	Pressure rating for connection:	PN 16
	Port-to-port length:	800 mm
	Flange size for motor:	FF300
	Electrical data:	
	Motor type:	SIEMENS
	IE Efficiency class:	IE3
	Rated power - P2:	22 kW
	Mains frequency:	50 Hz
	Rated voltage:	3 x 380-420D/660-725Y V
	Rated current:	42,5-40,5/24,6-23,6 A
	Starting current:	680-680 %
	Cos phi - power factor:	0.8
	Rated speed:	1470 rpm
	Efficiency:	IE3 93,0%
	Motor efficiency at full load:	93.0-93.0 %
	Motor efficiency at 3/4 load:	93.7-93.7 %
	Motor efficiency at 1/2 load:	93.7-93.7 %
	Number of poles:	4
	Enclosure class (IEC 34-5):	IP55
	Insulation class (IEC 85):	F
	Motor No:	99454134
	Others:	
	Minimum efficiency index, MEI ≥:	0.70
	Net weight:	428 kg
	Gross weight:	573 kg
	Shipping volume:	1.76 m³
	Country of origin:	HU
	Custom tariff no.:	84137051

99473945 TPE 125-340/4 NC-A-F-A-BQQE-QX3 50 Hz

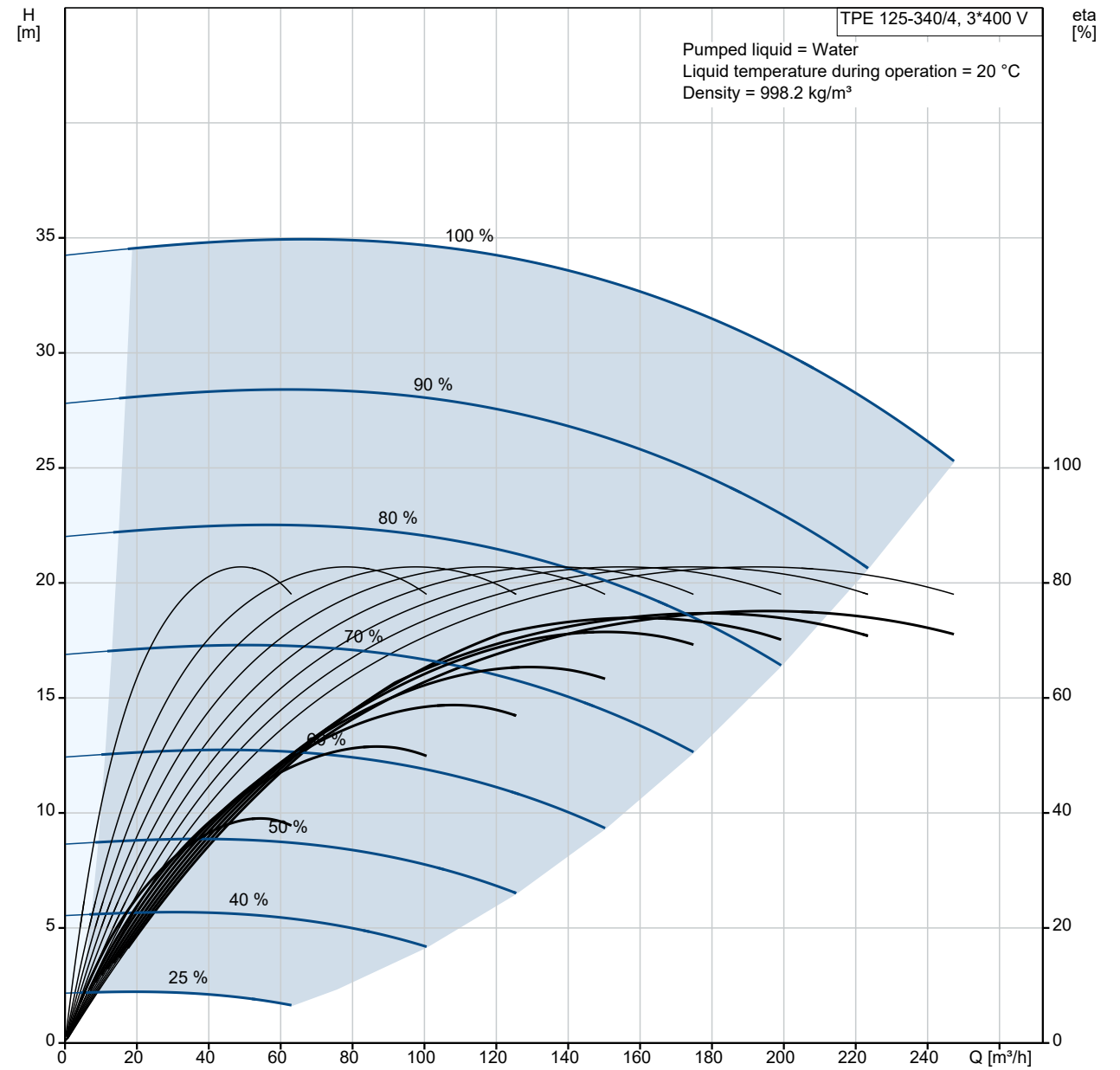

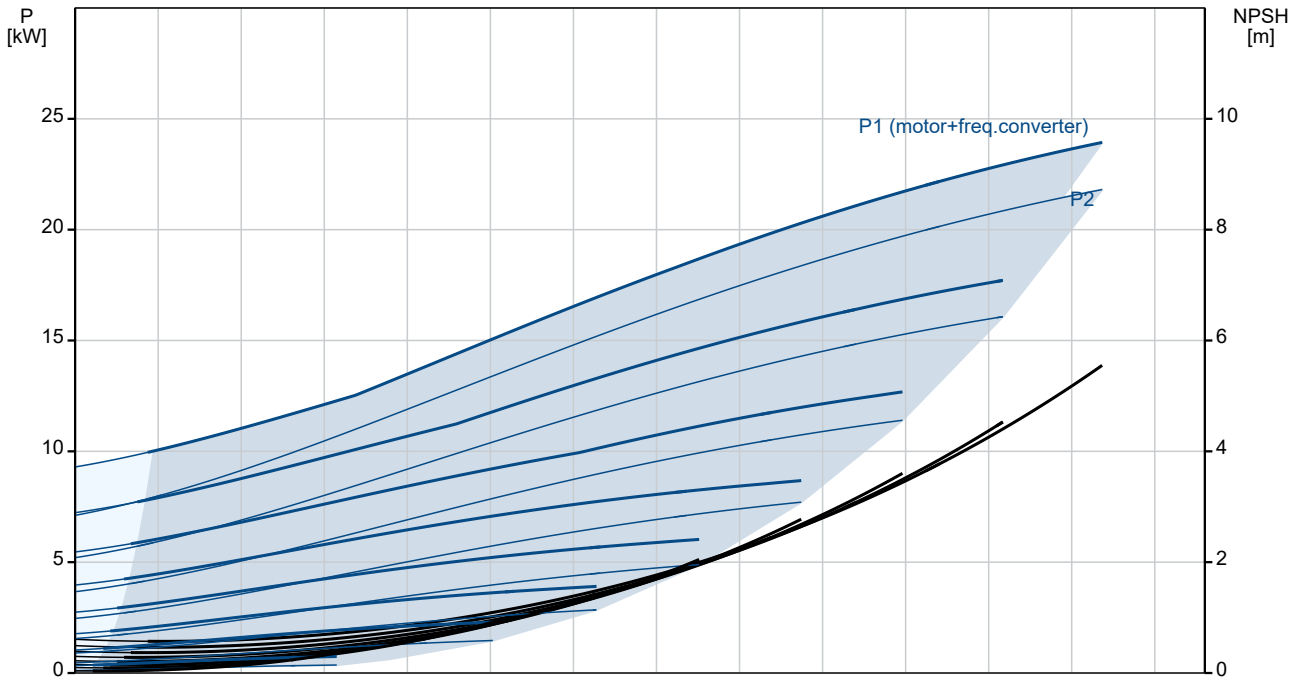

Description	Value
General information:	
Product name:	TPE 125-340/4 NC-A-F-A-BQQE-QX3
Product No:	99473945
EAN number:	5713829699229
Technical:	
Pump speed on which pump data are based:	1470 rpm
Rated flow:	191 m³/h
Rated head:	30.9 m
Maximum head:	340 dm
Actual impeller diameter:	312 mm
Code for shaft seal:	BQQE
Curve tolerance:	ISO9906:2012 3B
Pump version:	A
Materials:	
Pump housing:	Cast iron
Pump housing:	EN-GJL-250
Pump housing:	ASTM class 35
Impeller:	Cast iron
Impeller:	EN-GJL-200
Impeller:	ASTM class 30
Material code:	A
Installation:	
Range of ambient temperature:	-20 .. 55 °C
Maximum operating pressure:	16 bar
Max pressure at stated temp:	16 bar / 120 °C
Type of connection:	DIN
Size of connection:	DN 125
Pressure rating for connection:	PN 16
Port-to-port length:	800 mm
Flange size for motor:	FF300
Connect code:	F
Liquid:	
Pumped liquid:	Water
Liquid temperature range:	-25 .. 120 °C
Selected liquid temperature:	20 °C
Density:	998.2 kg/m³
Electrical data:	
Motor type:	SIEMENS
IE Efficiency class:	IE3
Rated power - P2:	22 kW
Mains frequency:	50 Hz
Rated voltage:	3 x 380-420D/660-725Y V
Rated current:	42,5-40,5/24,6-23,6 A
Starting current:	680-680 %
Cos phi - power factor:	0.8
Rated speed:	1470 rpm
Efficiency:	IE3 93,0%
Motor efficiency at full load:	93.0-93.0 %
Motor efficiency at 3/4 load:	93.7-93.7 %
Motor efficiency at 1/2 load:	93.7-93.7 %
Number of poles:	4
Enclosure class (IEC 34-5):	IP55
Insulation class (IEC 85):	F
Motor protec:	PTC
Motor No:	99454134
Controls:	
VFD product number:	99448797
Frequency converter:	Built-in
Type of frequency converter:	CUE 3X380-500V IP55 RUG 22KW
Appr. for VFD:	CE, CULUS, C-TICK
Others:	
Minimum efficiency index, MEI ≥:	0.70

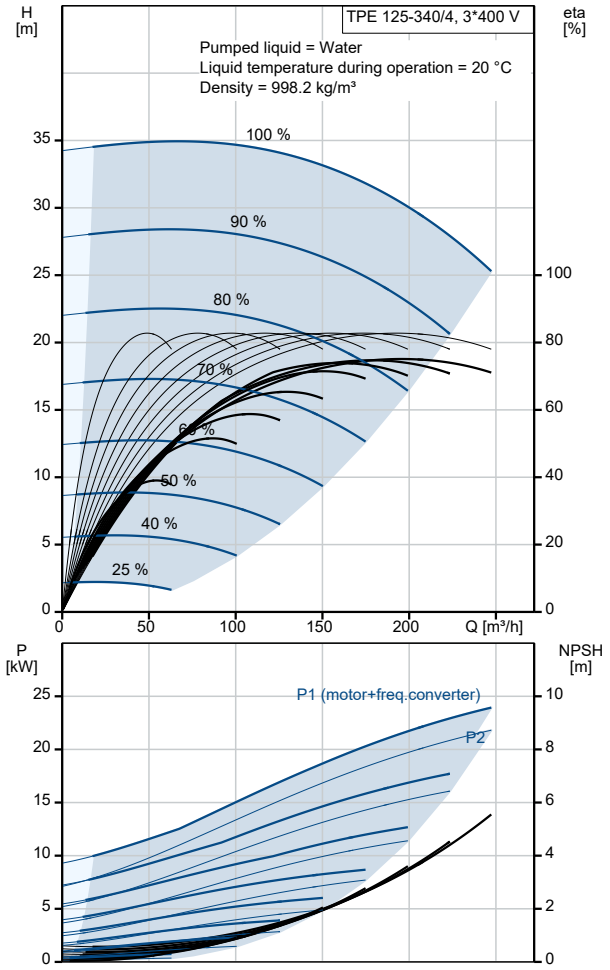

Description	Value
Net weight:	428 kg
Gross weight:	573 kg
Shipping volume:	1.76 m³
Config. file no:	99465396
Country of origin:	HU
Custom tariff no.:	84137051

99473945 TPE 125-340/4 NC-A-F-A-BQQE-QX3 50 Hz

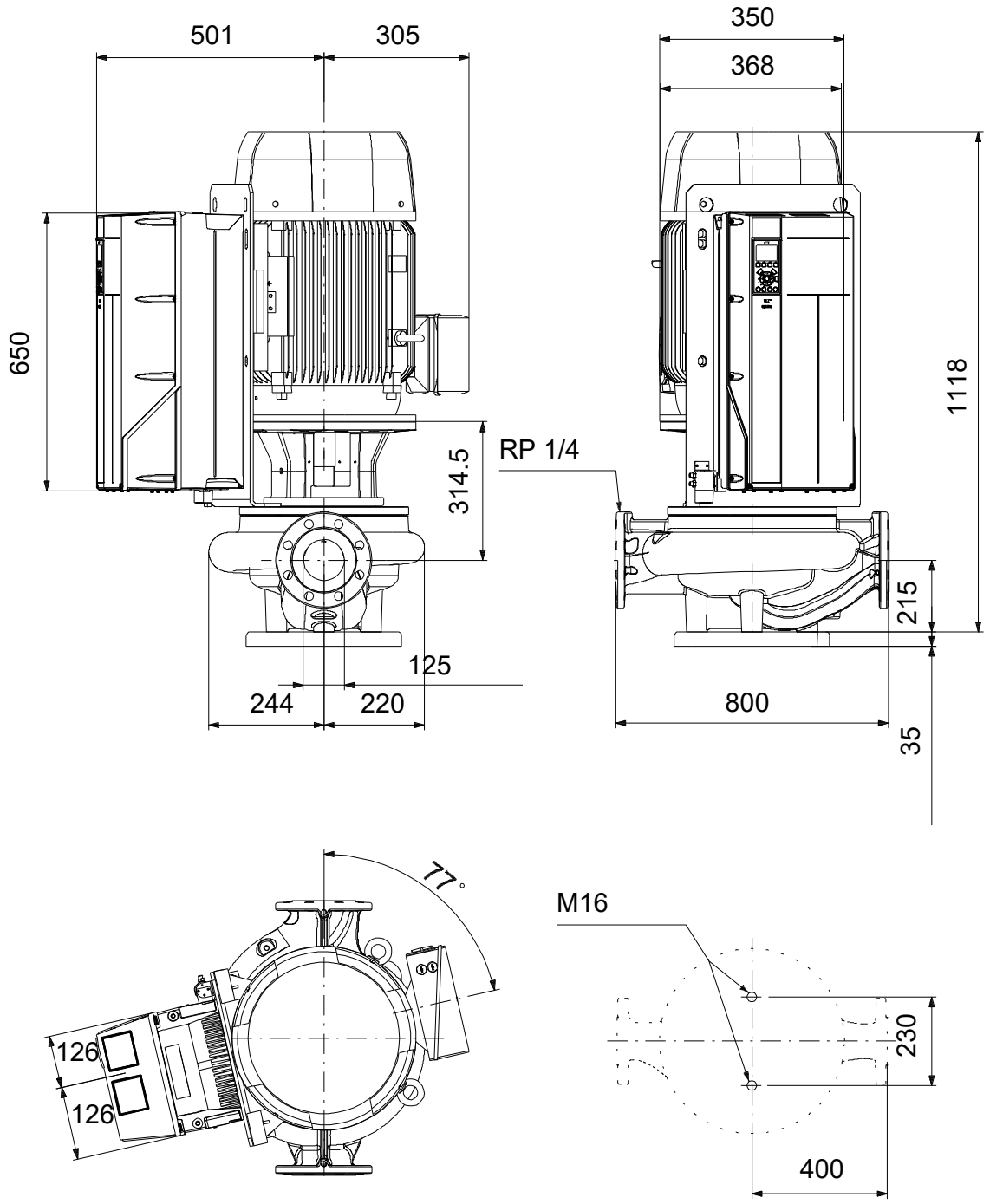

Note! All units are in [mm] unless others are stated.
Disclaimer: This simplified dimensional drawing does not show all details.

Spare parts TPE 125-340/4, Product No. 99473945
Produced After 2050 (production year and week number)

	Pos	Omschrijving	Opmerking tekst	Classificatie Gegevens	Onderdeelnr.	Aantal	Eenheid
-	56	Base plate			96536246	1	pcs
	28g	Hex head cap screw		Length (mm): 30 MM		2	
				Thread: M16			
	56	Base plate				1	
-		Spare, wear ring			99208807	1	pcs
	45	Wear ring				1	
		Control card			99590986	1	pcs
		Control panel			99591437	1	pcs
	4	Fan, internal			96901612	1	pcs
	6	Fan, main			96809605	1	pcs
	5	Power card			96809725	1	pcs
	3	SMPS			96809376	1	pcs
		Staybolt			97512560	4	pcs
-		Motor				1	pcs
-	153	Ball bearing			99510992	1	
	153	Ball bearing				1	
	156	Kit, fan			98507819	1	
	151	Kit, fan cover			98920945	1	
	18	Plug			96620482	1	pcs
	18	Plug			98164277	1	pcs
	19	Plug			98163028	2	pcs
	28	Hex head screw			96620478	4	pcs
	36	Hex nut		Thread: M16	96620480	4	pcs
	36	Nut		Thread: M12	96620479	4	pcs
	49	Impeller			98517635	1	pcs
	56	Base plate			99788464	1	pcs
	67	Nut		Thread: M18	92526535	1	pcs
	72a	O-ring		Diameter: 329,79	92547632	1	pcs
				Material type: EPDM			
				Thickness: 3,53			
	72a	O-ring		Diameter: 329,79	92526511	1	pcs
				Material type: EPDM			
				Thickness: 3,53			
	72a	O-ring		Diameter: 329,79	97511846	1	pcs
				Material type: EPDM			
				Thickness: 3,53			
	72a	O-ring		Diameter: 329,79	97757675	1	pcs
				Material type: EPDM			
				Thickness: 3,53			