Inventflow: Grundfos A-partner

Grundfos TPE 150-520/4 NC-A-F-A-BQQE-UX3

Find the pump here:
https://inventflow.nl/en/pompenfilter/tpe/grundfos-tpe-150-520-4-nc-a-f-a-bqqe-ux3

Contact

info@inventflow.nl
+31 (0) 546 45 80 72

Datasheet

Qty.	Description
1	**TPE 150-520/4 NC-A-F-A-BQQE-UX3**

Note! Product picture may differ from actual product

Product No.: 99473952

Single-stage, close-coupled, volute pump with in-line suction and discharge ports of identical diameter.
The pump is of the top-pull-out design, i.e.
the power head (motor, pump head and impeller) can be removed for maintenance or service while the pump housing remains in the pipework.
The pump is fitted with an unbalanced rubber bellows seal.
The shaft seal is according to EN 12756.
Flange standard: Pipework connection is via PN 16 DIN flanges (EN 1092-2 and ISO 7005-2).
The pump is fitted with a fan-cooled asynchronous motor.
The pump includes a frequency converter and PI controller.
This enables continuously variable control of the motor speed, which again enables adaptation of the performance to a given requirement.

Controls:

VFD product number:	99448802
Frequency converter:	Built-in
Type of frequency converter:	CUE 3X380-500V IP55 RUG 55KW
Appr. for VFD:	CE, CULUS, C-TICK

Liquid:

Pumped liquid:	Water
Liquid temperature range:	-25 .. 120 °C
Selected liquid temperature:	20 °C
Density:	998.2 kg/m³

Technical:

Pump speed on which pump data are based:	1485 rpm
Rated flow:	317 m³/h
Rated head:	46 m
Actual impeller diameter:	382 mm
Code for shaft seal:	BQQE
Curve tolerance:	ISO9906:2012 3B

Materials:

Pump housing:	Cast iron EN-GJL-250 ASTM class 35
Impeller:	Cast iron EN-GJL-200

Qty.	Description	
		ASTM class 30
	Installation:	
	Range of ambient temperature:	-20 .. 55 °C
	Maximum operating pressure:	16 bar
	Max pressure at stated temp:	16 bar / 120 °C
	Type of connection:	DIN
	Size of connection:	DN 150
	Pressure rating for connection:	PN 16
	Port-to-port length:	1000 mm
	Flange size for motor:	FF500
	Electrical data:	
	Motor type:	SIEMENS
	IE Efficiency class:	IE3
	Rated power - P2:	55 kW
	Mains frequency:	50 Hz
	Rated voltage:	3 x 380-420D/660-725Y V
	Rated current:	100-93,0/58,0-54,0 A
	Starting current:	680-680 %
	Cos phi - power factor:	0.9
	Rated speed:	1480 rpm
	Efficiency:	IE3 94,6%
	Motor efficiency at full load:	94.6-94.6 %
	Motor efficiency at 3/4 load:	95.1-95.1 %
	Motor efficiency at 1/2 load:	95.0-95.0 %
	Number of poles:	4
	Enclosure class (IEC 34-5):	IP55
	Insulation class (IEC 85):	F
	Motor No:	99454138
	Others:	
	Minimum efficiency index, MEI ≥:	0.70
	Net weight:	940 kg
	Gross weight:	1110 kg
	Shipping volume:	3.55 m³
	Country of origin:	HU
	Custom tariff no.:	84137051

99473952 TPE 150-520/4 NC-A-F-A-BQQE-UX3 50 Hz

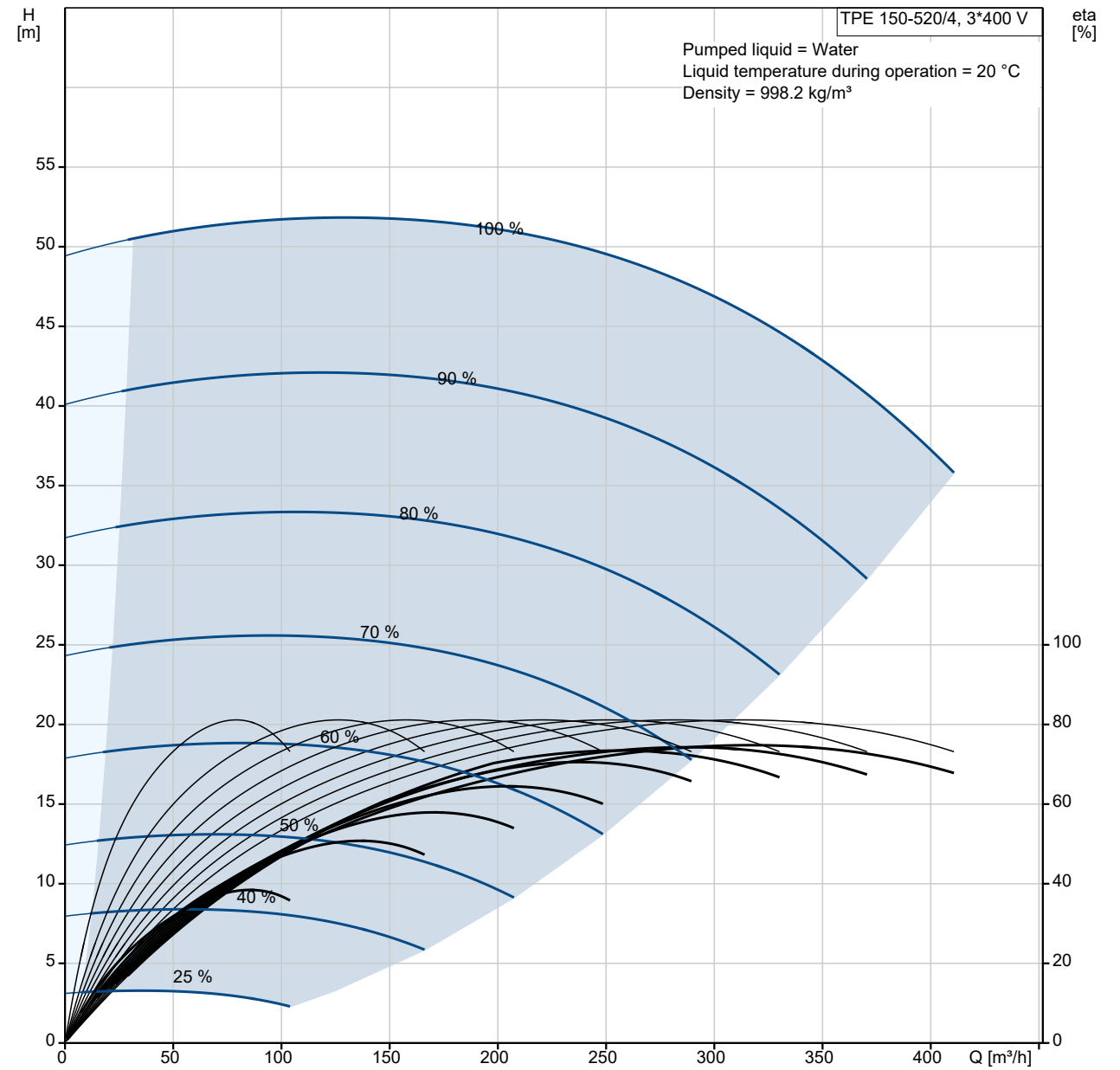

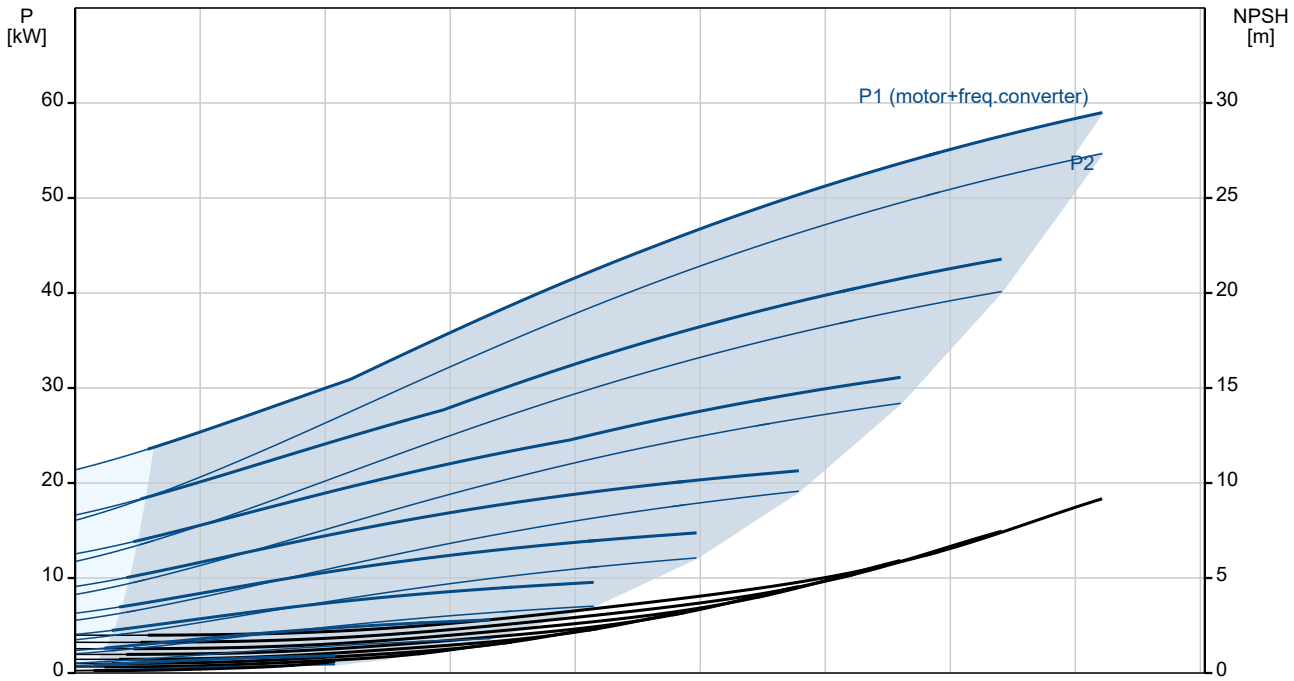

Description	Value
General information:	
Product name:	TPE 150-520/4 NC-A-F-A-BQQE-UX3
Product No:	99473952
EAN number:	5713829699359
Technical:	
Pump speed on which pump data are based:	1485 rpm
Rated flow:	317 m³/h
Rated head:	46 m
Maximum head:	520 dm
Actual impeller diameter:	382 mm
Code for shaft seal:	BQQE
Curve tolerance:	ISO9906:2012 3B
Pump version:	A
Materials:	
Pump housing:	Cast iron
Pump housing:	EN-GJL-250
Pump housing:	ASTM class 35
Impeller:	Cast iron
Impeller:	EN-GJL-200
Impeller:	ASTM class 30
Material code:	A
Installation:	
Range of ambient temperature:	-20 .. 55 °C
Maximum operating pressure:	16 bar
Max pressure at stated temp:	16 bar / 120 °C
Type of connection:	DIN
Size of connection:	DN 150
Pressure rating for connection:	PN 16
Port-to-port length:	1000 mm
Flange size for motor:	FF500
Connect code:	F
Liquid:	
Pumped liquid:	Water
Liquid temperature range:	-25 .. 120 °C
Selected liquid temperature:	20 °C
Density:	998.2 kg/m³
Electrical data:	
Motor type:	SIEMENS
IE Efficiency class:	IE3
Rated power - P2:	55 kW
Mains frequency:	50 Hz
Rated voltage:	3 x 380-420D/660-725Y V
Rated current:	100-93,0/58,0-54,0 A
Starting current:	680-680 %
Cos phi - power factor:	0.9
Rated speed:	1480 rpm
Efficiency:	IE3 94,6%
Motor efficiency at full load:	94.6-94.6 %
Motor efficiency at 3/4 load:	95.1-95.1 %
Motor efficiency at 1/2 load:	95.0-95.0 %
Number of poles:	4
Enclosure class (IEC 34-5):	IP55
Insulation class (IEC 85):	F
Motor protec:	PTC
Motor No:	99454138
Controls:	
VFD product number:	99448802
Frequency converter:	Built-in
Type of frequency converter:	CUE 3X380-500V IP55 RUG 55KW
Appr. for VFD:	CE, CULUS, C-TICK
Others:	
Minimum efficiency index, MEI ≥:	0.70

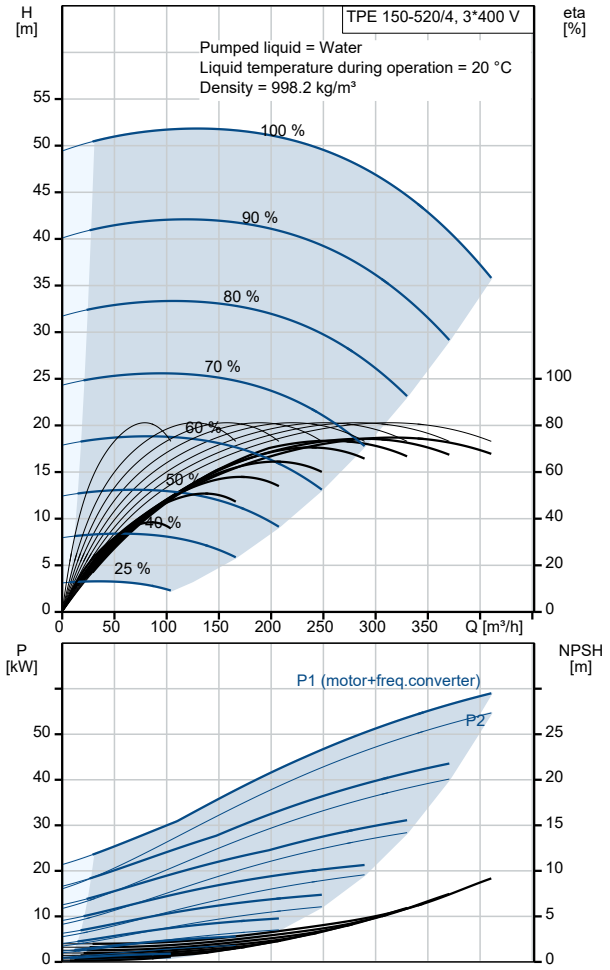

Description	Value
Net weight:	940 kg
Gross weight:	1110 kg
Shipping volume:	3.55 m³
Config. file no:	99465408
Country of origin:	HU
Custom tariff no.:	84137051

99473952 TPE 150-520/4 NC-A-F-A-BQQE-UX3 50 Hz

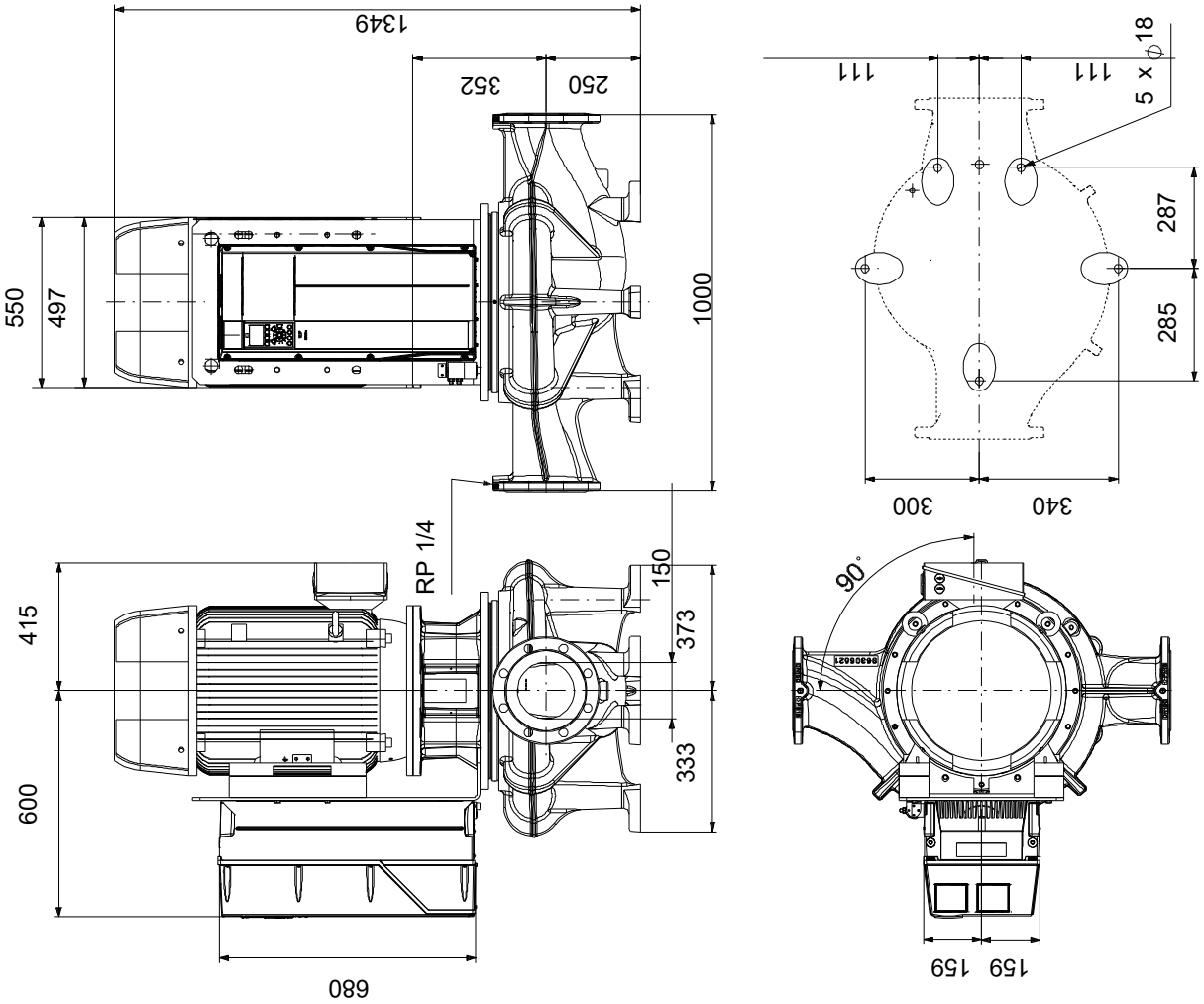

Note! All units are in [mm] unless others are stated.
Disclaimer: This simplified dimensional drawing does not show all details.

Spare parts TPE 150-520/4, Product No. 99473952
Produced After 1339 (production year and week number)

Pos	Omschrijving	Opmerking tekst	Classificatie Gegevens	Onderdeelnr.	Aantal	Eenheid
-	Spare, wear ring			99208792	1	pcs
45	Wear ring				1	
	Control card			99590986	1	pcs
	Control panel			99591437	1	pcs
9	Current sensor			96809465	1	pcs
4	Fan, internal			96809361	1	pcs
6	Fan, main			96809614	1	pcs
8	IGBT			96809411	1	pcs
5	Power card			96809742	1	pcs
7	Rectifier/thyristor			96809429	1	pcs
-	Motor				1	pcs
- 153	Ball bearing			99493504	1	
153	Ball bearing				1	
156	Fan			96766619	1	
151	Kit, fan cover			98062277	1	
164a	Kit, terminal box			98062264	1	
18	Plug			96620482	1	pcs
18	Plug			98164277	1	pcs
19	Plug			98163028	2	pcs
28	Hex head screw		Length (mm): 60	97506949	8	pcs
			Thread: M16			
28	Hex nut		Thread: M16	97511792	4	pcs
36	Nut		Thread: M12	96620479	16	pcs
36	Hex nut		Thread: M16	96620480	8	pcs
67	Nut		Thread: M25	92526532	1	pcs
72a	O-ring		Diameter: 66	92547638	1	pcs
			Material type: RUBBER			
			Thickness: 3,53			
72a	O-ring		Diameter: 66	92526512	1	pcs
			Material type: RUBBER			
			Thickness: 3,53			
72a	O-ring		Diameter: 66	97511857	1	pcs
			Material type: RUBBER			
			Thickness: 3,53			
72a	O-ring		Diameter: 66	97757676	1	pcs
			Material type: RUBBER			
			Thickness: 3,53			
77a	Pan head screw			99266550	4	pcs